SBU Wall Bracket - Beta release v.1.1

Wall Fixation kit:

Assemble and Anti-vibration kit

Crossbar fixation: (*)

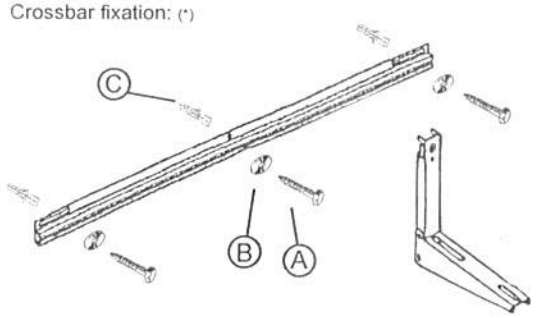

Assembling bracket arm:

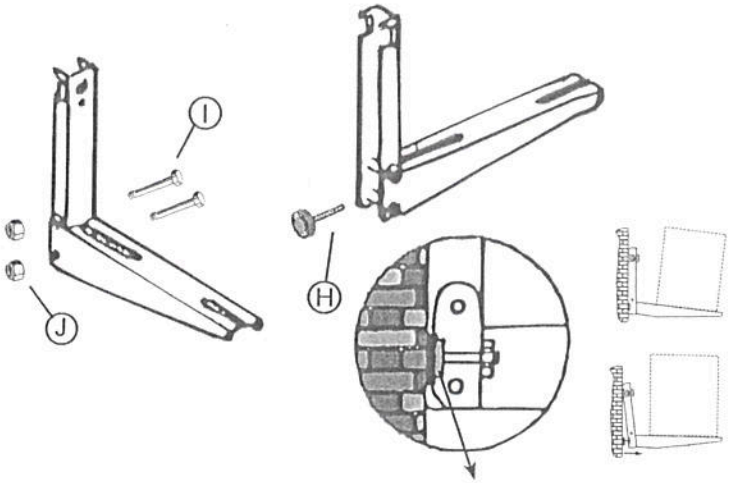

Adjustment point

Assembling anti-vibration kit

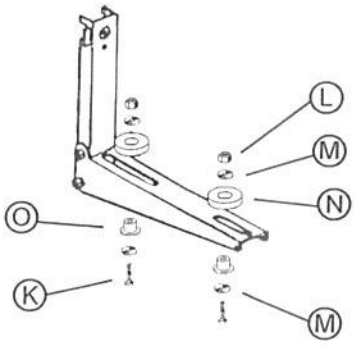

Bracket arm fixation to crossbar:

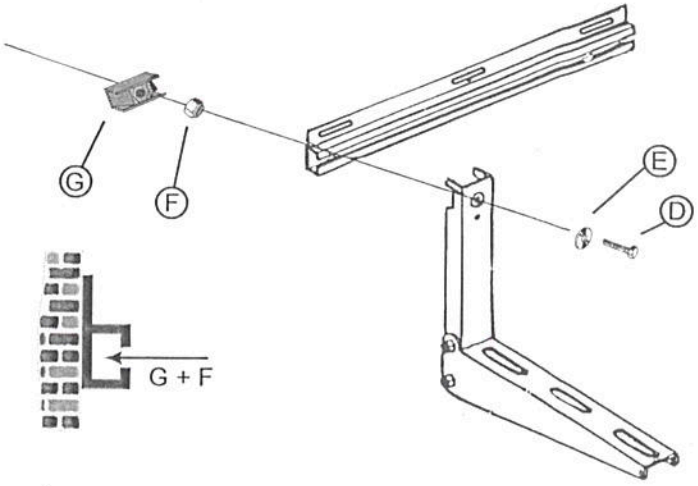

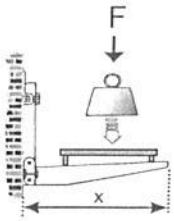

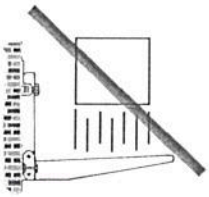

x = 450 mm = 70 Kg
x = 530 mm = 100 Kg

Disclaimer:
We advise our customers to controle whether the products they chose are appropriate to be used as thought. As application, use and execution are made out of our control, the utilisators are only responsible and should check and respect compliance with local and environmental regulation according to the field of application.
(*) Compliance with local regulations, safety factors, wall structures and adequate choice of models are totally beyond our control. It's the sole responsability of the customer and or the installator to choose and use appropriate material
according to the professional know-how, in respect with all regulations in application at the location of installation and in conformity to the installation instructions and recommendations of the manuels of the air conditioning device. It is also the installator's entire responsability to check if the supplied fixation screws and plugs (our fixation kit) are suitable for a safe and professional installation on the type of wall or surface that will be used to install the brackets and the air conditioning device on. In case of claim or dispute, all cases will be considered according to our General Conditions of Sales. A copy of the resistance tests may be obtained by simple written request.