KOHLER. Faucets

Devonshire®

Bath Spout Non-diverter with NPT Connection

K-373

Features

- 4-5/8" non-diverter bath spout with 1/2" NPT connection.
- Coordinates with Devonshire faucets, accessories, and showering components to complete your bathroom.

Material

- KOHLER finishes resist corrosion and tarnishing.
- Premium Metal Construction.

Installation

- Wall-mount
- NPT Connection

Codes/Standards

None Applicable

KOHLER® Faucet Lifetime Limited Warranty

See website for detailed warranty information.

Available Colors/Finishes

Color tiles intended for reference only.

Color	Code	Description
	CP	Polished Chrome
	SN	Vibrant® Polished Nickel
	PB	Vibrant® Polished Brass
	BN	Vibrant® Brushed Nickel
	BV	Vibrant® Brushed Bronze
	2BZ	Oil-Rubbed Bronze

KOHLER. Faucets

Devonshire®

Bath Spout Non-diverter with NPT Connection

K-373

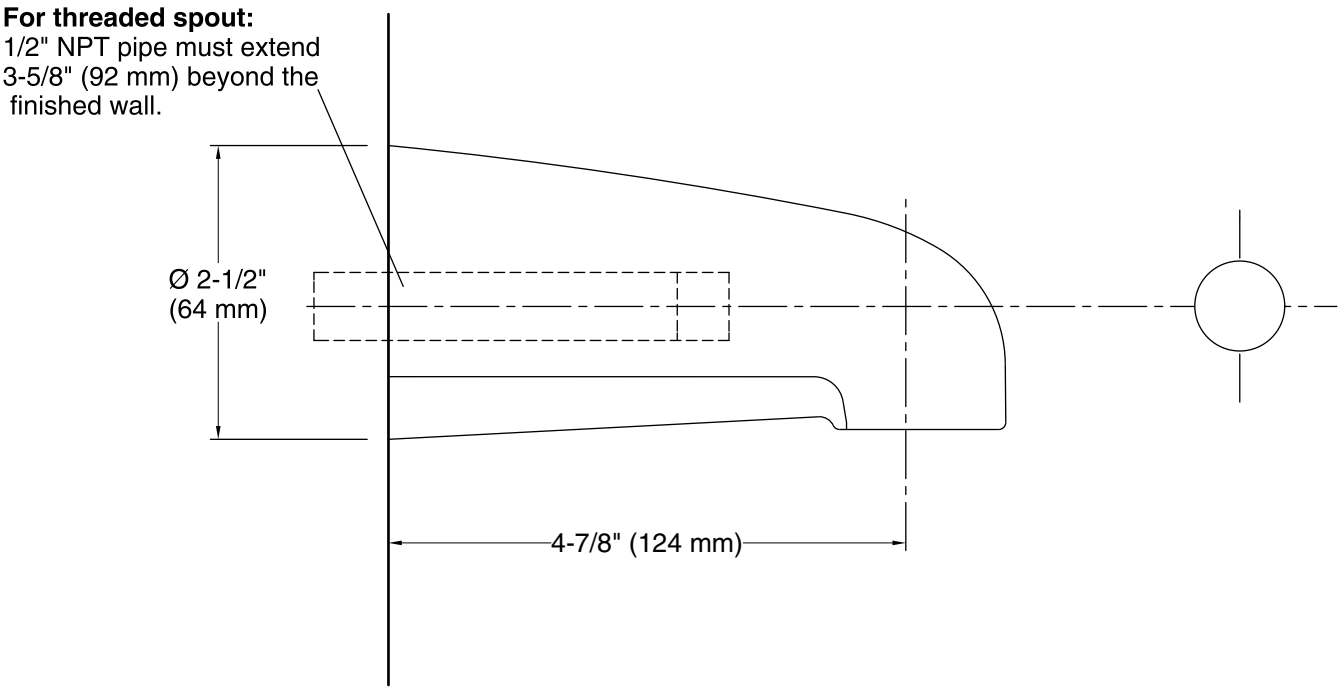

Technical Information

All product dimensions are nominal.

Notes

Install this product according to the installation guide.