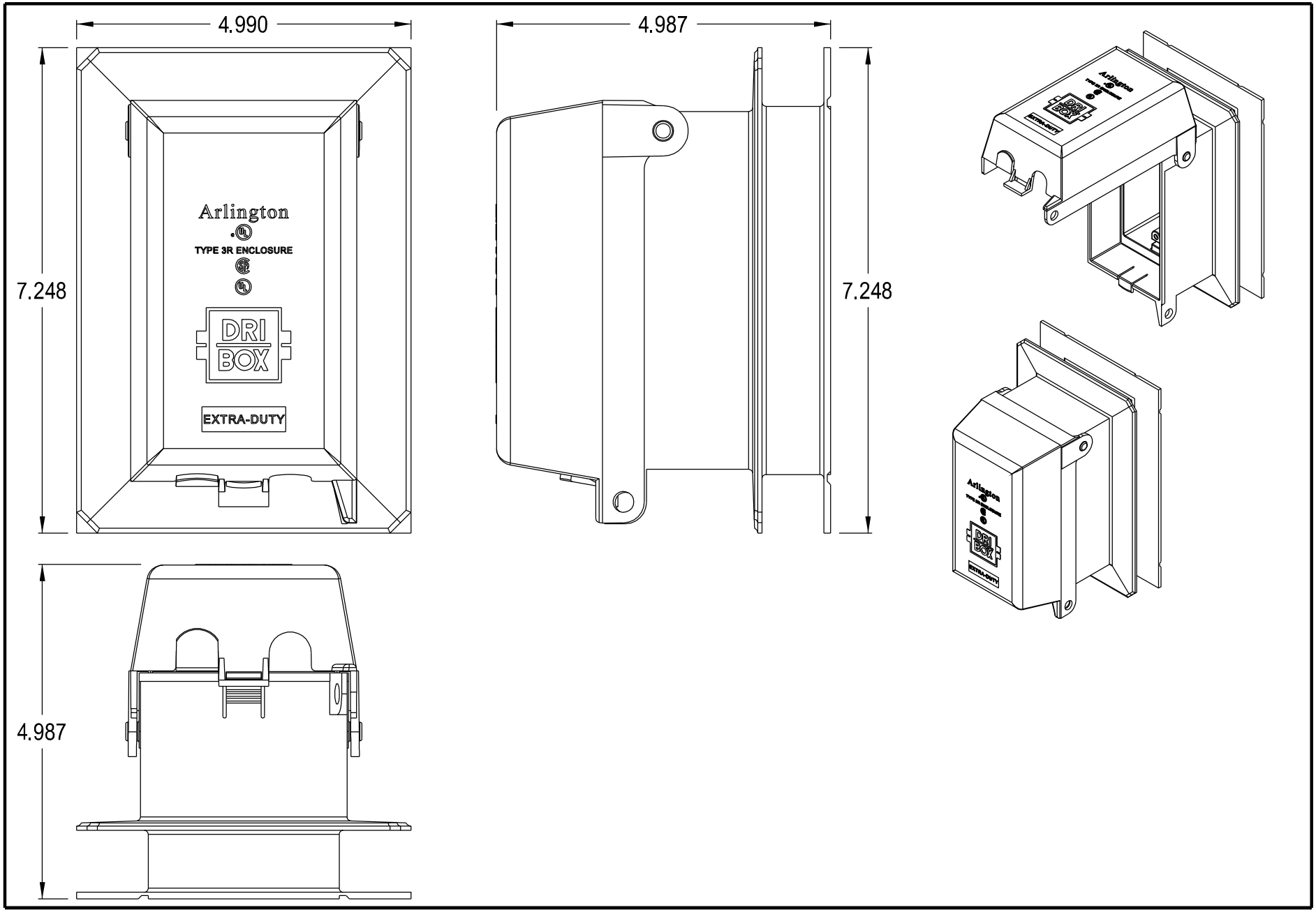
4.990
7.248
Arlington
TYPE 3R ENCLOSURE
DRI BOX
EXTRA-DUTY
4.987
7.248
4.987