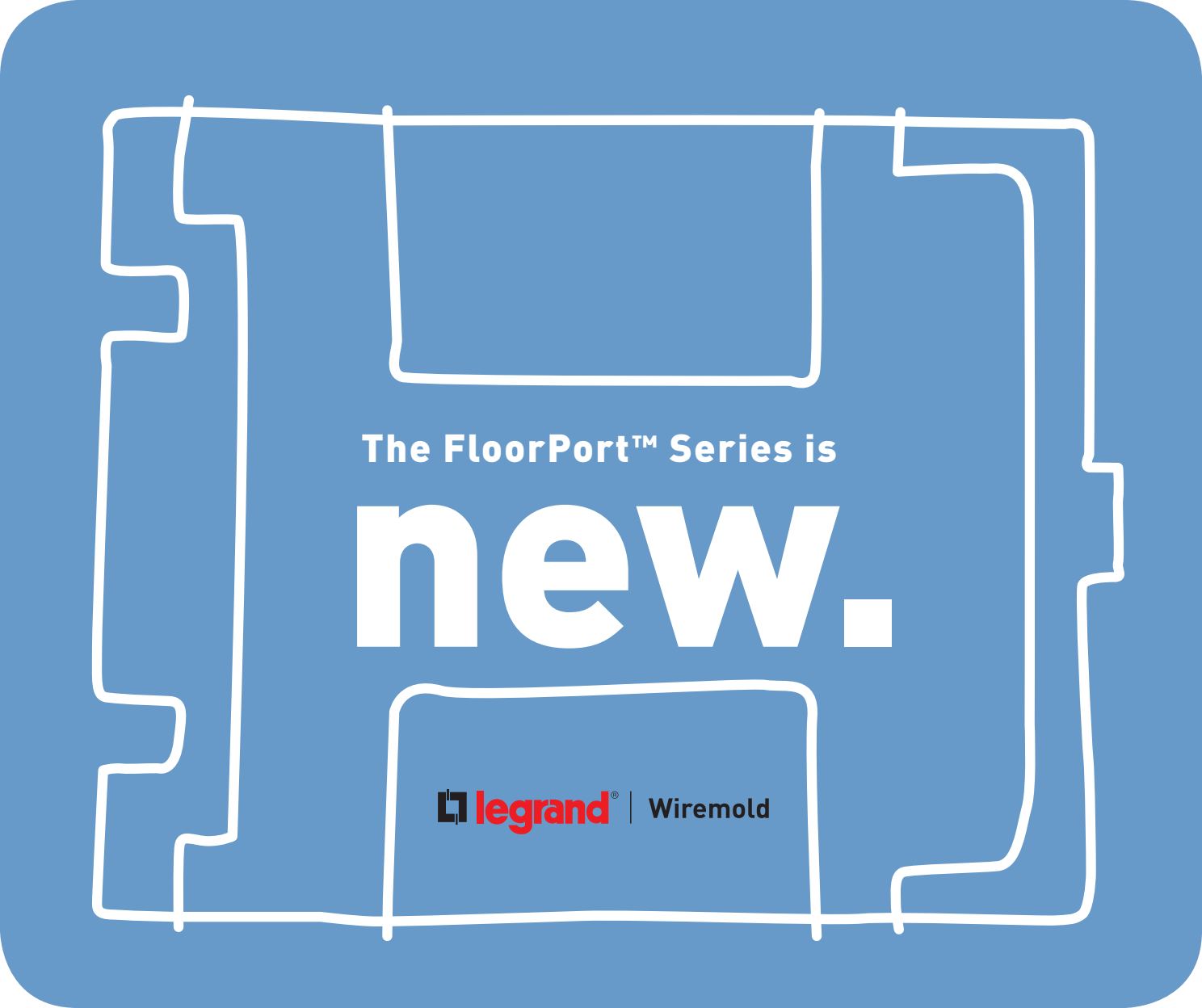
The FloorPort™ Series is
new.
legrand®
Wiremold

And improved. And improved. And improved. And improved. **Longer life hinge.** And improved. And improved. And improved. And improved. **Full-size, self-closing handle.** And improved. And improved. And improved. And improved. And improved. **Cover opens a full 180.°** And improved. And improved. And improved. And improved. And improved. And improved. And improved. And improved. And improved. And improved. And improved. And improved. And improved. And improved. **Accommodates multiple infloor systems.** And improved. And improved. And improved. And improved. And improved. And improved. And improved. And improved. **Expanded color palette.** And improved. And improved. And improved.

The new and improved FloorPort™ Series from Legrand/Wiremold.

We've created a more durable, versatile, aesthetically pleasing FloorPort cover based on our customers' insights. Available in flush and recessed activations, it's ideal for a wide range of applications, from schools and airports, to offices and institutions. All of which suggests that new and improved is, well, new and improved. According to people who know. **You.**

FloorPort™ Series Color Options

Our new palette upholds your design integrity. Choose from six resilient color options, including nickel, bronze, brass, grey, black and brushed aluminum. And the use of powder coat paint reduces environmental impact.

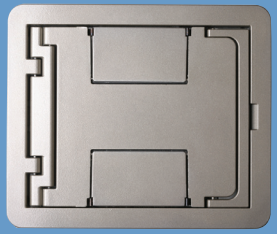

Flanged Blank Nickel

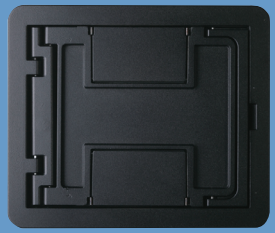

Flanged Cutout Black

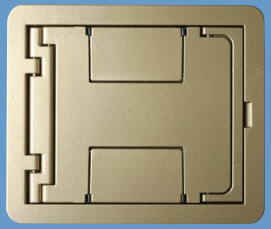

Flanged Blank Brass

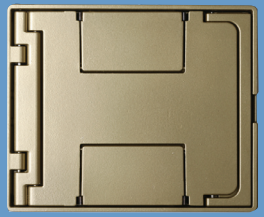

Flangeless Blank Brass

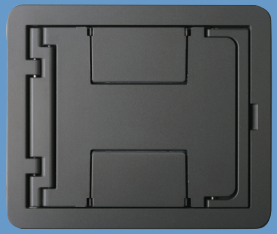

Flanged Blank Gray

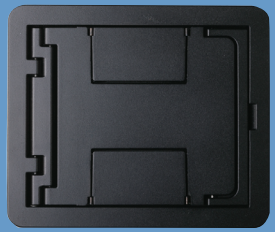

Flanged Blank Black

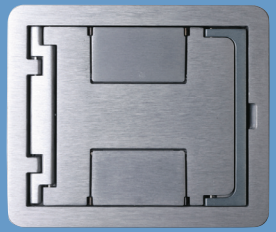

Flanged Blank
Brushed Aluminum

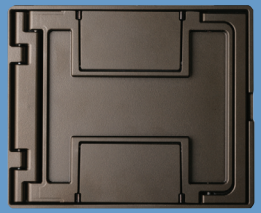

Flangeless Cutout Bronze

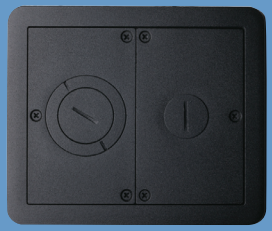

Flanged Furniture Feed
Black

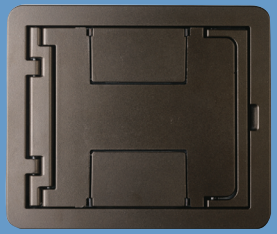

Flanged Blank Bronze

legrand® | Wiremold

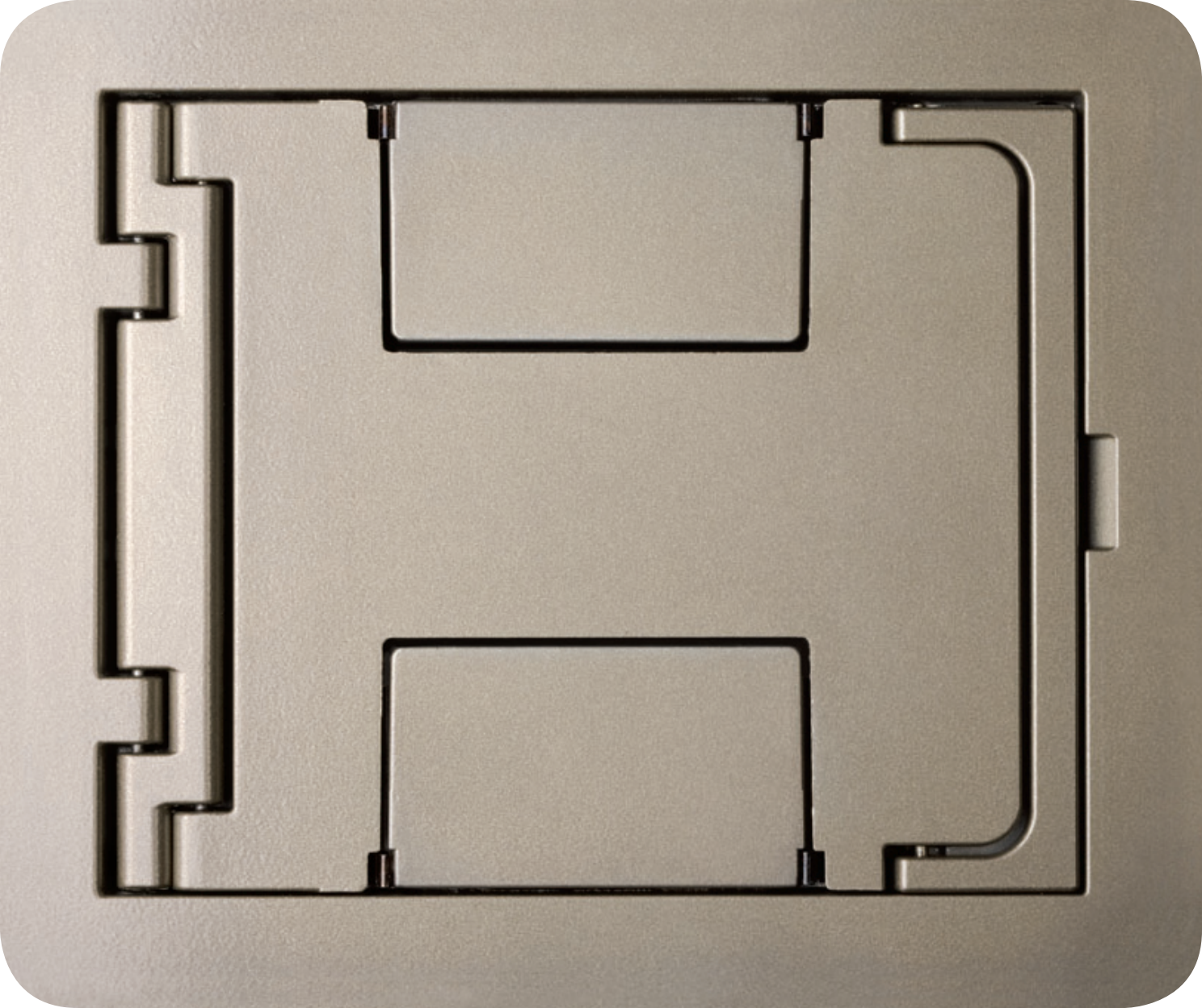

Durable design

The hinge is more durable to withstand most high traffic areas. The die-cast, articulated design allows you to open the cover a full 180° to lie flat for easy access to all compartments and reduces trip hazards.

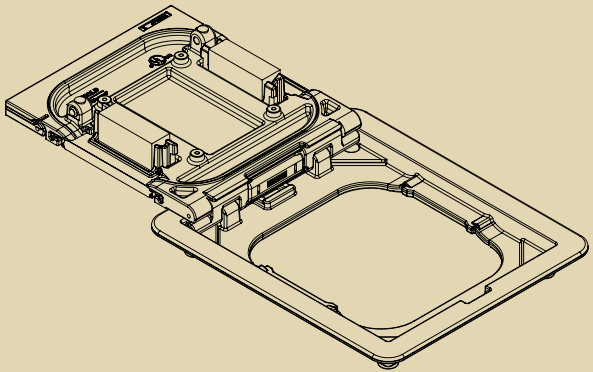

legrand® | Wiremold

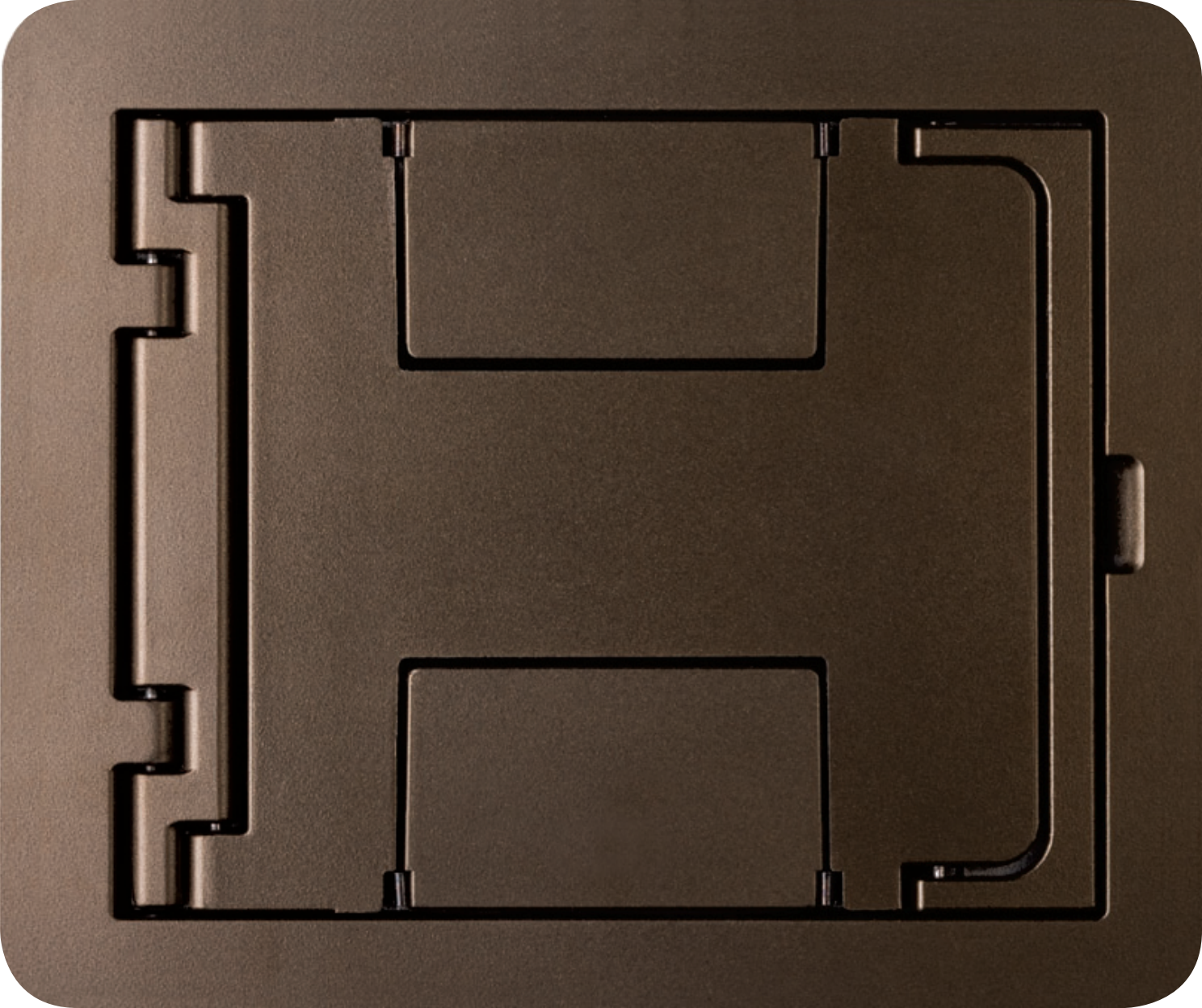

Consistent flexibility

FloorPort covers support a variety of flooring applications. Flanged trims can be used on carpeted floors to prevent fraying or in applications exposed to heavy loads, while flangeless trims are used on tile floors. The FloorPort Series works interchangeably with multiple infloor systems including RFB® Floor Boxes and WalkerCell® Cellular Raceway Systems for a seamlessly integrated look.

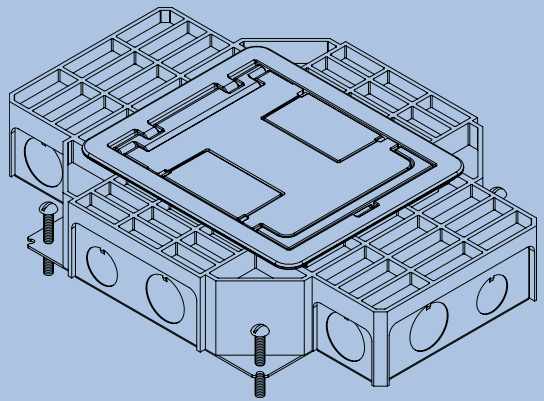

legrand® | Wiremold

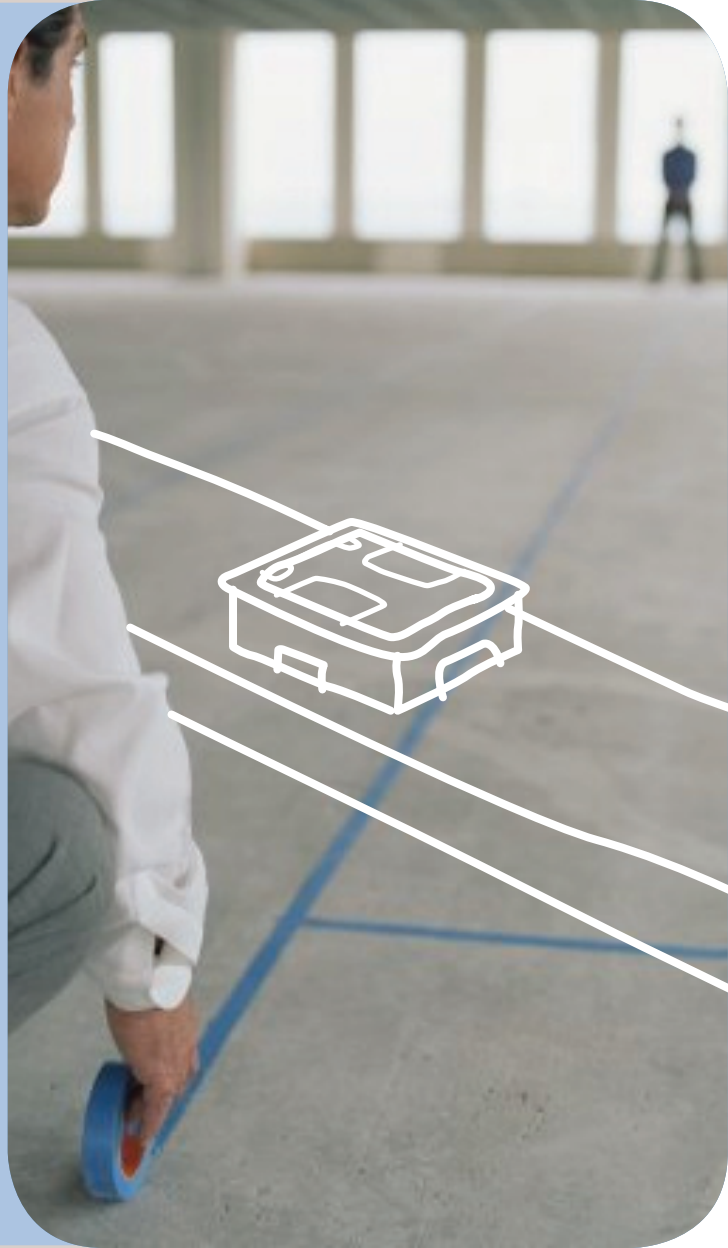

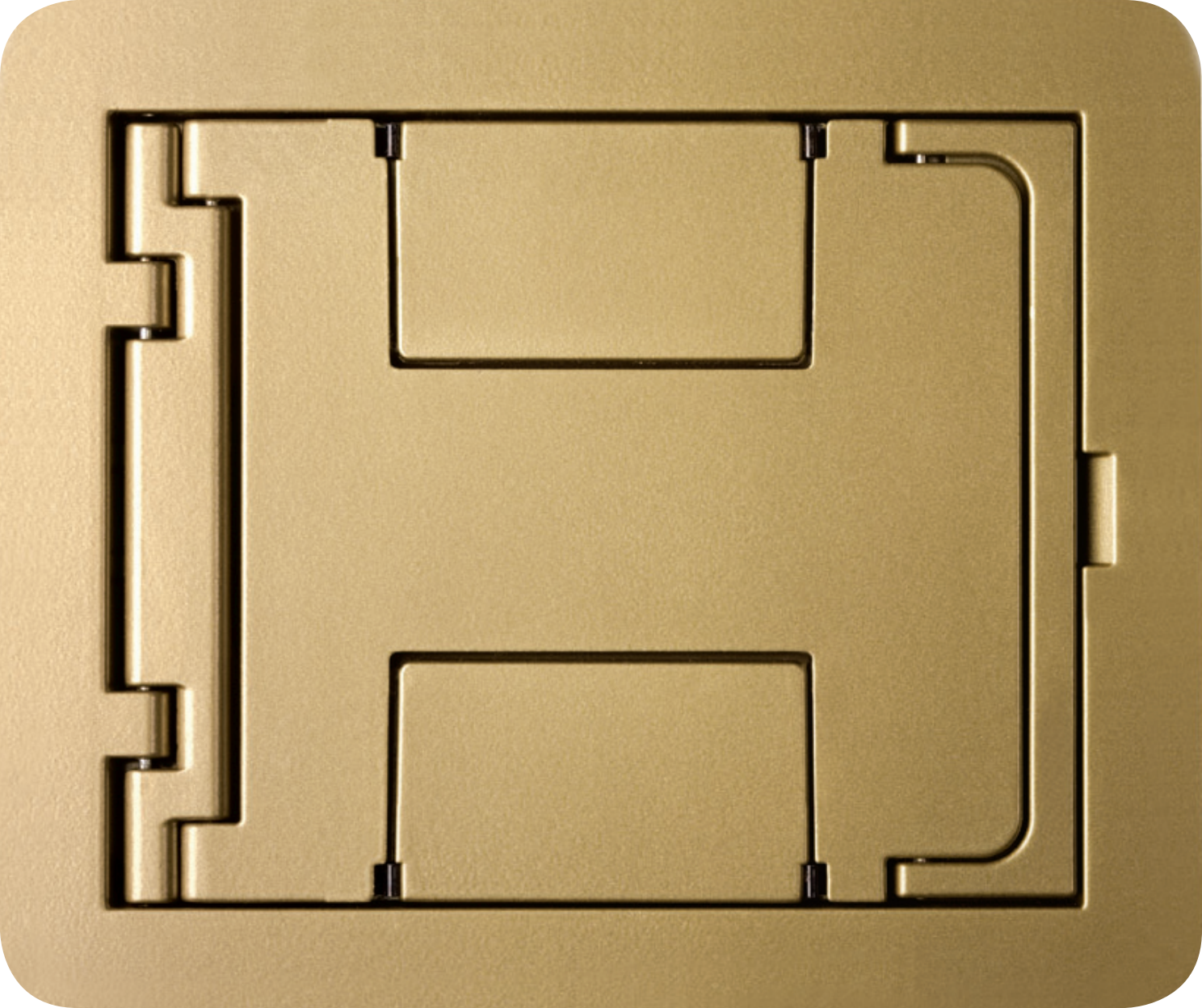

Fully capable

A full-size handle makes our cover easy to open and close. The self-closing feature further enhances the handle's functionality. We've also improved the latching mechanism to ensure longevity.

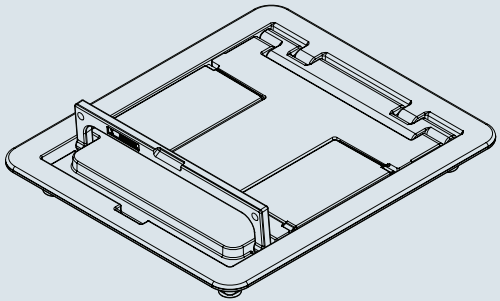

legrand® | Wiremold

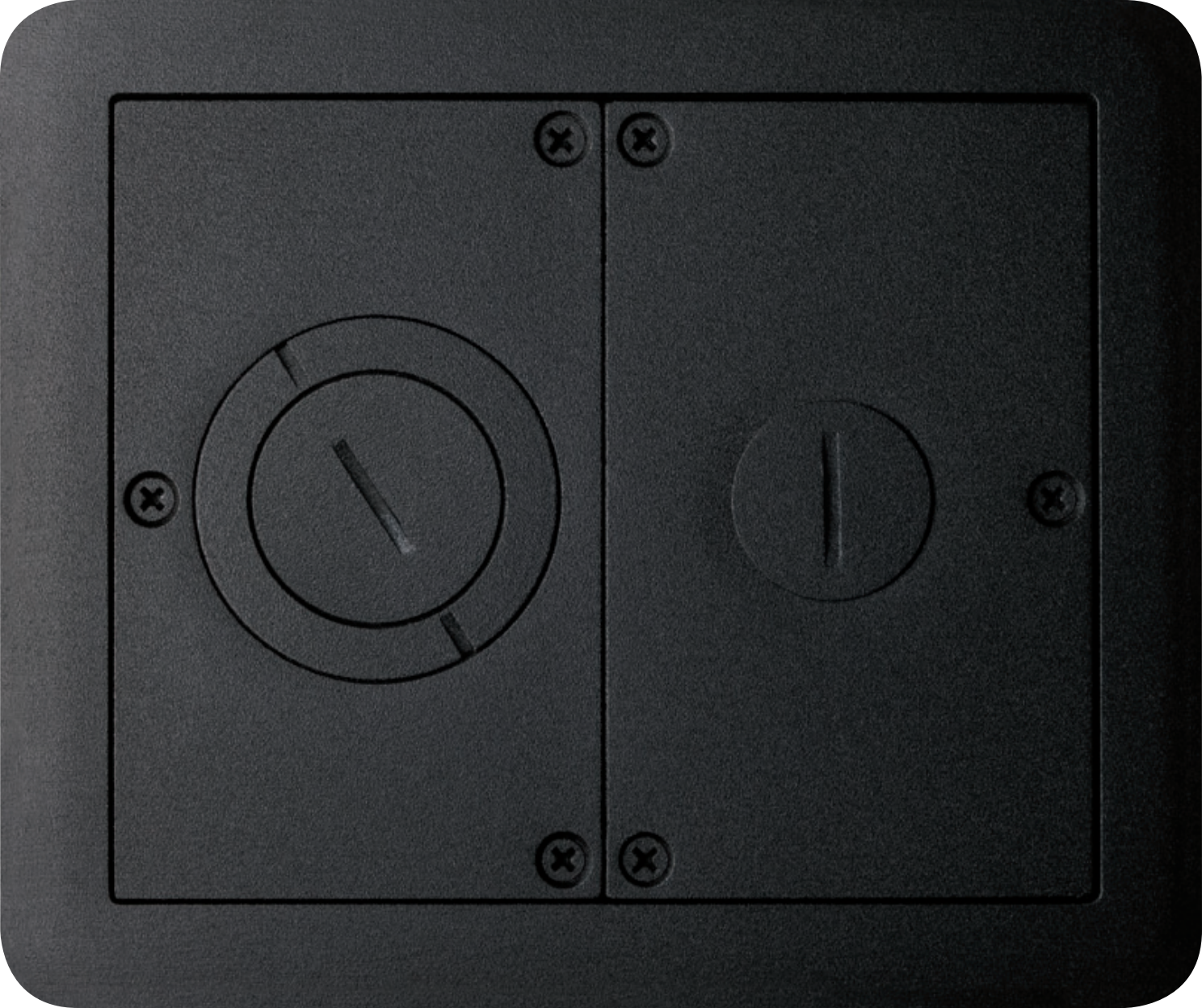

Protect & serve

Two large egress openings can accommodate bigger cables, while locking in the “up” position to protect cables. And TopGuard™ protection safeguards power and communication compartments against water, dust and debris, exceeding UL® scrub water standards.

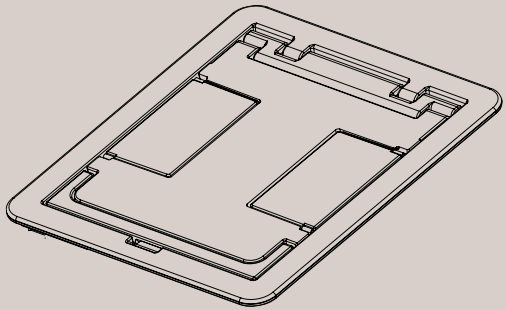

legrand® | Wiremold

Improving the future.

At Legrand/Wiremold, we're always looking at how to make your life better. Whether it's durability, functionality or versatility, you can count on us to keep improving. And improving.

© 2009 Legrand. All Rights Reserved. ED1611 1209

legrand® | Wiremold

Legrand/Wiremold
60 Woodlawn Street
West Hartford, CT 06110
Phone: 1.800.621.0049
Fax: 1.860.232.2062

Legrand Canada
570 Applewood Crescent
Vaughan, ON, L4K 4B4
Phone: 905.738.9195
Fax: 905.738.9721
www.legrand.ca