NEW! See reverse

Low Voltage Mounting Brackets

Nail down the savings – Lower cost than mud rings!

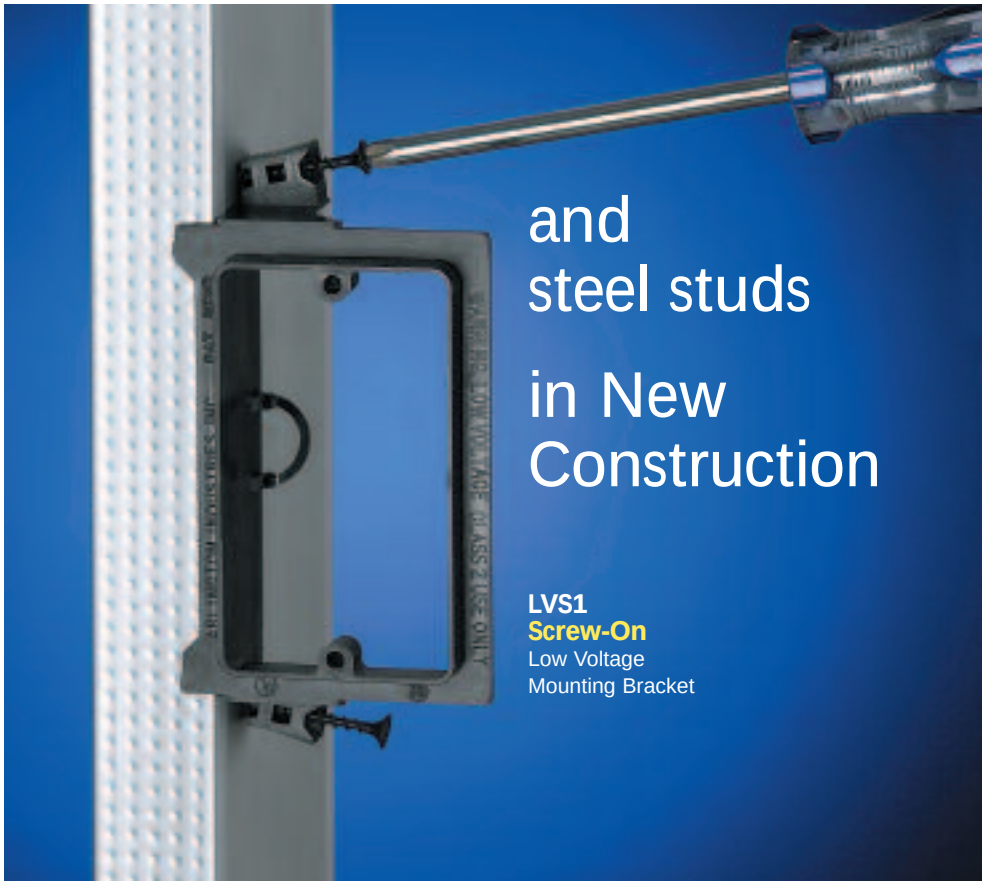

Designed for the installation of LOW VOLTAGE Class 2 wiring, Arlington's non-metallic Low Voltage Mounting Brackets offer the fast, easy and cost-effective way to install CAT 5, fiber optic, cable TV, and communications cable in new construction.

Available in two styles, nail-on for wood studs, and screw-on for wood or metal studs, these low voltage brackets are made of non-conductive plastic to protect cable from damage.

- *Eliminates pushback*
- *Competitively priced – cost less than plastic or steel mud rings*
- *Available in one and two-gang styles*

LVN1

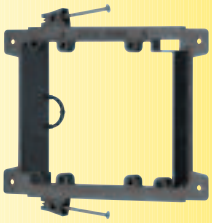

LVN2

LVS1, LVS2 not shown

Patent pending

Arlington

1 Stauffer Industrial Park
Scranton, PA 18517
800/233.4717
Fax 570/562.0646
www.aifittings.com

Low Voltage Mounting Brackets

for CAT 5 • Fiber Optic • Cable TV • Communications

NAIL-ON or SCREW-ON
Non-metallic Low Voltage Mounting Brackets

- *Come complete with captive nails or screws, ready to install.*
- *Built-in loop for tying off cable.*
- *Nail-on bracket Installs in 25% less time – and the screw-on style in 50% less time than steel or plastic mud rings.*

Catalog Number	UPC/DCI/NAED MFG #01 8997	Description	Unit Pkg	Std Pkg
LVN1	00261	Nail-on/single gang	50	50
LVN2	00275	Nail-on/two-gang	50	50
LVS1	00262	Screw-on/single gang	50	50
LVS2	00280	Screw-on/two-gang	50	50

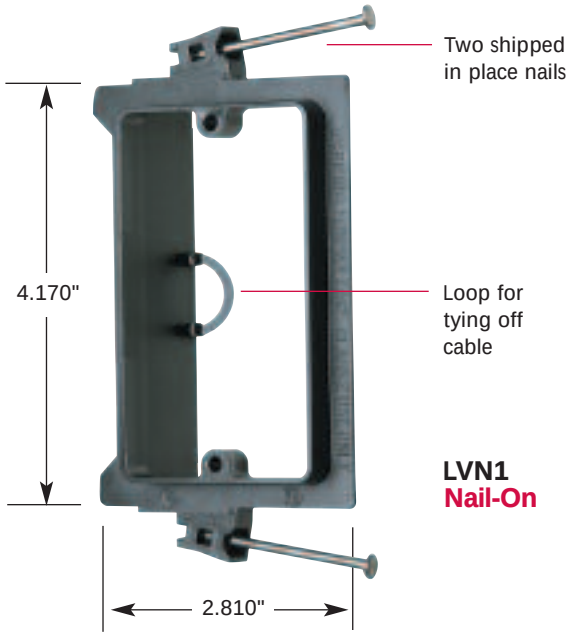

LVN1
Nail-On

Cost less than steel Mud Rings

for New Construction

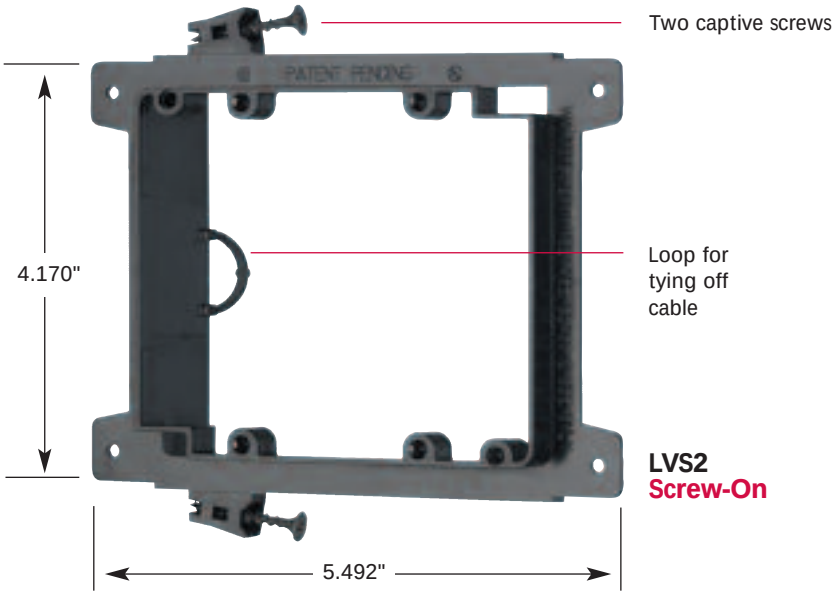

LVS2
Screw-On

Arlington

1 Stauffer Industrial Park
Scranton, PA 18517
800/233.4717
Fax 570/562.0646
www.aifittings.com

Distributed by

©2002 - 2006 Arlington Industries, Inc.

Patented/Additional patents pending. LVN1&2 1006/15M