Installation Instructions

SLC 500™ Analog Input Module

(Catalog Number 1746-NI8)

Inside…

Important User Information 2
For More Information 3
Hazardous Location Considerations 4
Environnements dangereux 4
Electrostatic Damage 5
1746-NI8 Power Requirements 5
Module Location in Chassis 6
Heat and Noise Considerations 7
Module Installation and Removal 7
Terminal Wiring 10
Input Devices 15
Specifications 17

Publication 1746-IN006A-US-P

Important User Information

Because of the variety of uses for the products described in this publication, those responsible for the application and use of this control equipment must satisfy themselves that all necessary steps have been taken to assure that each application and use meets all performance and safety requirements, including any applicable laws, regulations, codes and standards.

The illustrations, charts, sample programs and layout examples shown in this guide are intended solely for purposes of example. Since there are many variables and requirements associated with any particular installation, Allen-Bradley does not assume responsibility or liability (to include intellectual property liability) for actual use based upon the examples shown in this publication.

Allen-Bradley publication SGI-1.1, *Safety Guidelines for the Application, Installation and Maintenance of Solid-State Control* (available from your local Allen-Bradley office), describes some important differences between solid-state equipment and electromechanical devices that should be taken into consideration when applying products such as those described in this publication.

Reproduction of the contents of this copyrighted publication, in whole or part, without written permission of Rockwell Automation, is prohibited.

ATTENTION

Identifies information about practices or circumstances that can lead to personal injury or death, property damage, or economic loss.

Attention statements help you to:

- identify a hazard
- avoid the hazard
- recognize the consequences

IMPORTANT

Identifies information that is critical for successful application and understanding of the product.

For More Information

For detailed information on planning and installing your system, see the following publications:

Publication	Publication Number
Industrial Automation Wiring and Grounding Guidelines	1770-4.1
SLC 500™ Analog Input Modules User Manual	1746-6.8
SLC 500™ Modular Hardware Style Operation and Installation Manual	1747-6.2
SLC 500™ Fixed Hardware Style Operation and Installation Manual	1747-6.21

If you would like a manual, you can:

- download a free electronic version from the internet: **www.theautomationbookstore.com**
- purchase a printed manual by:
  - contacting your local distributor or Rockwell Automation representative
  - visiting **www.theautomationbookstore.com** and placing your order
  - calling **1.800.963.9548** (USA/Canada) or **001.330.725.1574** (Outside USA/Canada)

Hazardous Location Considerations

This equipment is suitable for use in Class I, Division 2, Groups A, B, C, D or non-hazardous locations only. The following WARNING statement applies to use in hazardous locations.

WARNING

EXPLOSION HAZARD

- Substitution of components may impair suitability for Class I, Division 2.
- Do not replace components or disconnect equipment unless power has been switched off.
- Do not connect or disconnect components unless power has been switched off.
- All wiring must comply with N.E.C. article 501-4(b).

Environnements dangereux

Cet équipement est conçu pour être utilisé dans des environnements de Classe 1, Division 2, Groupes A, B, C, D ou non dangereux. La mise en garde suivante s'applique à une utilisation dans des environnements dangereux.

MISE EN GARDE

DANGER D'EXPLOSION

- La substitution de composants peut rendre cet équipement impropre à une utilisation en environnement de Classe 1, Division 2.
- Ne pas remplacer de composants ou déconnecter l'équipement sans s'être assuré que l'alimentation est coupée.
- Ne pas connecter ou déconnecter des composants sans s'être assuré que l'alimentation est coupée.

Electrostatic Damage

Electrostatic discharge can damage semiconductor devices inside this module if you touch backplane connector pins. Guard against electrostatic damage by observing the following precautions.

ATTENTION

Electrostatic discharge can degrade performance or cause permanent damage. Handle the module as stated below.

- Wear an approved wrist strap grounding device when handling the module.
- Touch a grounded object to rid yourself of electrostatic charge before handling the module.
- Handle the module from the front, away from the backplane connector. Do not touch backplane connector pins.
- Keep the module in its static-shield bag when not in use, or during shipment.

1746-NI8 Power Requirements

The 1746-NI8 module receives its power through the SLC 500™ chassis backplane from the fixed or modular +5V dc/+24V dc chassis power supply. The +5V dc backplane supply powers the SLC circuitry and the +24V dc backplane supply powers the module analog circuitry. The maximum current drawn by the module is shown in the table below.

5V dc Amps	24V dc Amps
200 mA	100 mA

When you are using a *modular system* configuration, add the values shown in the table above to the requirements of all other modules in the SLC chassis to prevent overloading the chassis power supply.

Module Location in Chassis

Modular Chassis Considerations

Place your 1746-NI8 module in any slot of an SLC 500 modular, or modular expansion chassis, except for the extreme left slot (slot 0) in the first chassis. This slot is reserved for the processor or adapter modules.

IMPORTANT For applications using the upper limit of the operating temperature range, the 1746-NI8 module (or multiple modules) should be placed in the right-most slot(s) of the chassis.

Operating Temperature Range	
Temperature	**Chassis Location**
+0°C to +55°C (+32°F to +131°F)	Any slot except slot 0.
0°C to +60°C (32°F to 140°F)	In right most slot of chassis

Fixed Expansion Chassis Considerations

IMPORTANT The 2-slot, SLC 500 fixed I/O expansion chassis (1746-A2) supports only specific combinations of modules. If you are using the 1746-NI8 module in a 2-slot expansion chassis with another SLC I/O or communication module, refer to the 1746-NI8 user manual to determine whether the combination can be supported.

Heat and Noise Considerations

Most applications require installation in an industrial enclosure to reduce the effects of electrical interference. Analog inputs are highly susceptible to electrical noise. Electrical noise coupled to the analog inputs reduces the performance (accuracy) of the module.

Group your modules to minimize adverse effects from radiated electrical noise and heat. Consider the following conditions when selecting a slot for the analog input module. Position the module:

- in a slot away from sources of electrical noise such as hard-contact switches, relays, and AC motor drives
- away from modules which generate significant radiated heat, such as the 32-point I/O module (series C or earlier)

In addition, route shielded twisted-pair analog input wiring away from any high-voltage I/O wiring.

Module Installation and Removal

When installing the module in a chassis, it is not necessary to remove the terminal block from the module. However, if the terminal block is removed, use the write-on label (shown below) located on the side of the terminal block to identify the module location and type.

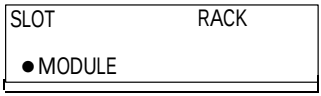

ATTENTION

Remove power before removing or inserting this module. When you remove or insert a module with power applied, an electrical arc may occur. An electrical arc can cause personal injury or property damage by:

- sending an erroneous signal to your system's field devices, causing unintended machine motion
- causing an explosion in a hazardous environment

Electrical arcing causes excessive wear to contacts on both the module and its mating connector. Worn contacts may create electrical resistance.

Terminal Block Removal

To remove the terminal block:

1. Loosen the two terminal block release screws.

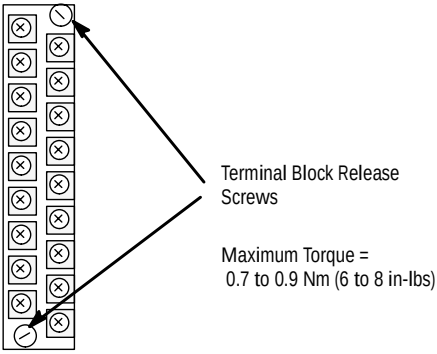

2. Grasp the terminal block at the top and bottom and pull outward and down.

Switch Settings to Select Voltage or Current Input

Before installing the module in the chassis, use the DIP switches on the module circuit board to select between voltage and current inputs for channels 0 through 7. The switch settings are

- OFF = VOLTAGE INPUT
- ON = CURRENT INPUT.

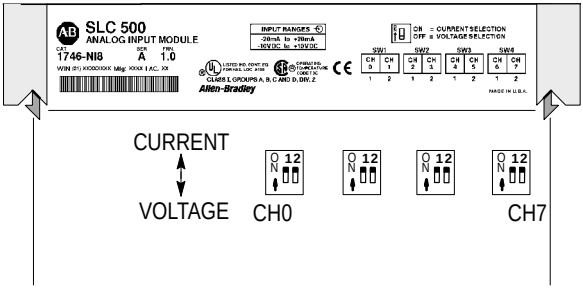

Module Installation Procedure

1. Align the circuit board of the analog input module with the card guides located at the top and bottom of the chassis.
2. Slide the module into the chassis until both top and bottom retaining clips are secured. Apply firm even pressure on the module to attach it to its backplane connector. Never force the module into the slot.
3. Cover all unused slots with the Card Slot Filler, catalog number 1746-N2.

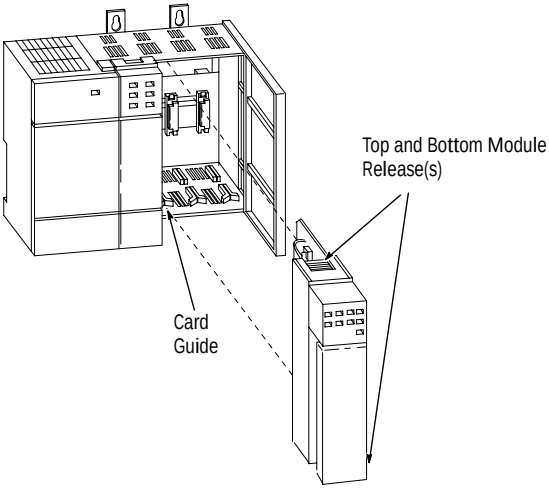

Module Removal Procedure

1. Press the releases at the top and bottom of the module and slide the module out of the chassis slot.
2. Cover all unused slots with the Card Slot Filler, catalog number 1746-N2.

Terminal Wiring

The 1746-NI8 module contains an 18-position, removable terminal block. The terminal pin-out is shown below.

ATTENTION

Disconnect power to the SLC before attempting to install, remove, or wire the removable terminal wiring block.

To avoid cracking the removable terminal block, alternate the removal of the slotted terminal block release screws.

Terminal Block

(Terminal Block Spare Part Catalog Number 1746-RT25G)

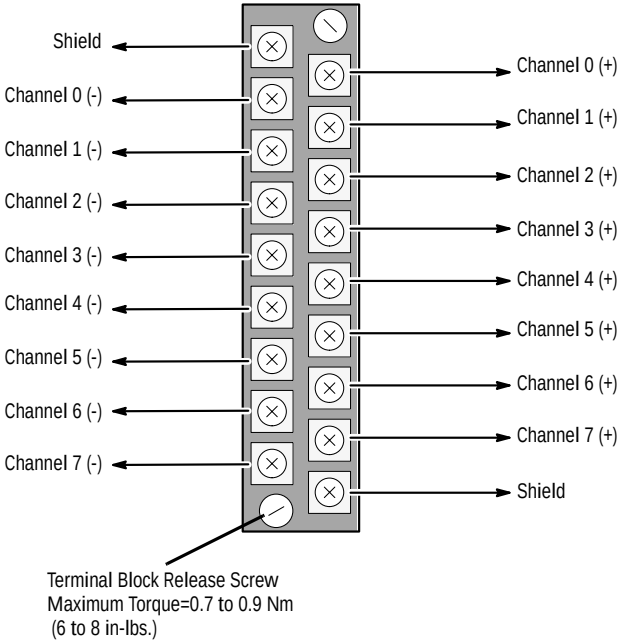

Wiring Single-Ended Inputs

The following diagram shows typical wiring for the 1746-NI8 module.

IMPORTANT Follow these guidelines when wiring the module.

- Use shielded communication cable (Belden™ 8761) and keep length as short as possible.
- Connect only one end of the cable shield to earth ground.
- Connect the shield drain wires for channels 0 to 3 to the top shield terminal.
- Shield terminals are internally connected to chassis ground which is connected to earth ground via the SLC backplane.
- Single-ended source commons may be jumpered together at the terminal block.
- Channels are not isolated from each other.
- If a different signal source has an analog common, it cannot and must not be connected to the module.
- Common mode voltage range is ±10.5 volts. The voltage between any two terminals must be less than 15 volts.
- The module does not provide power for the analog inputs.
- Use a power supply that matches the transmitter (sensor) specifications.

Typical 1746-NI8 Wiring

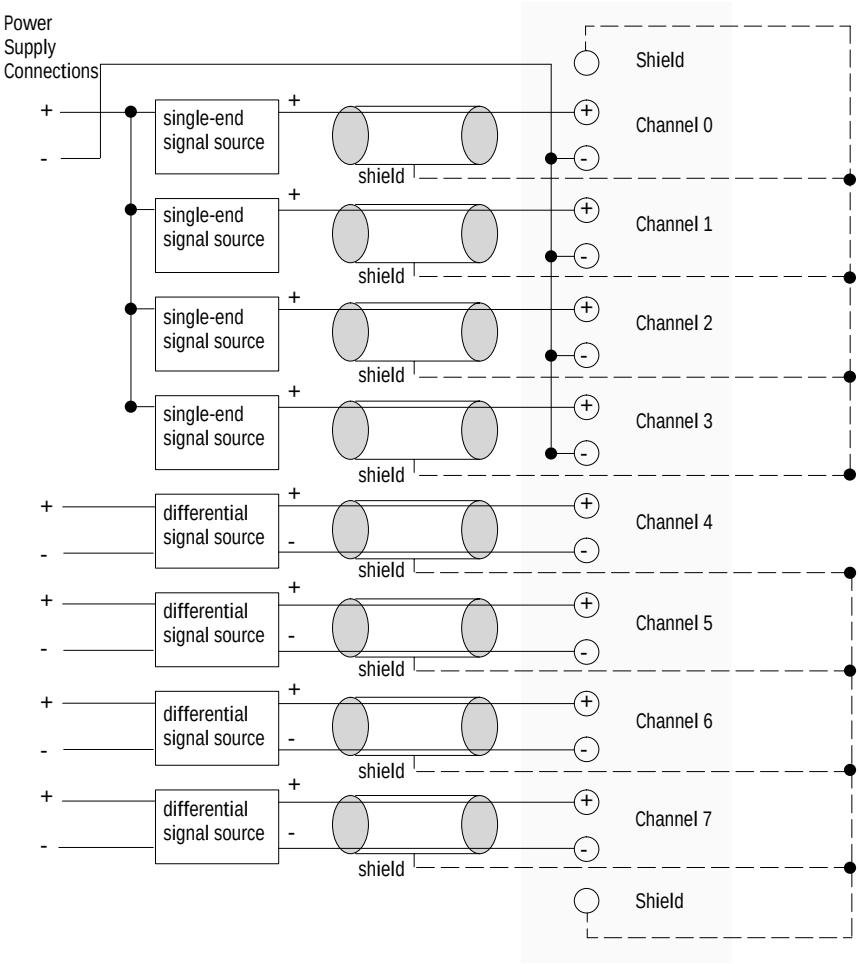

When wiring single-ended analog input devices to the analog input module, the number of total wires necessary can be limited by jumpering all “IN” terminals together. Note that differential inputs are more immune to noise than single-ended inputs.

IMPORTANT The module does not provide loop power for analog inputs. Use a power supply that matches the transmitter specifications.

Wiring Schematic for Single-Ended Analog Input Connections

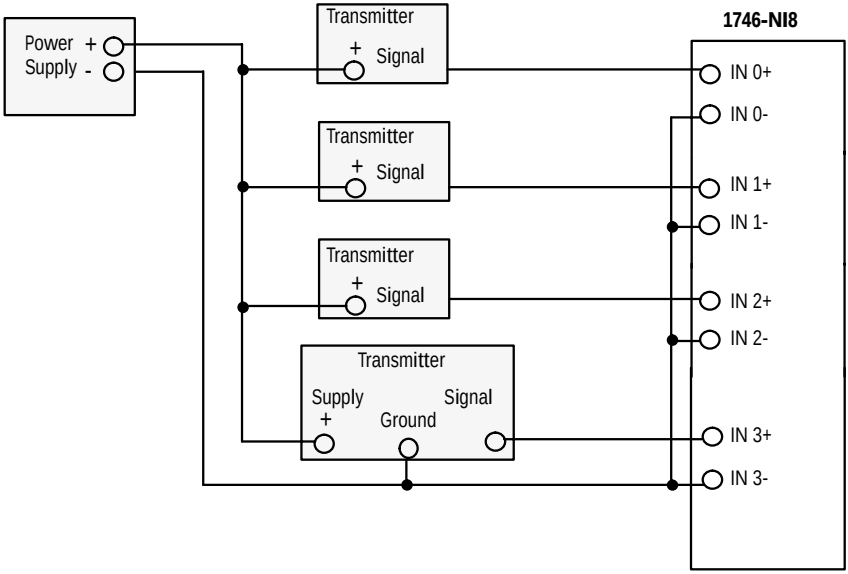

Wiring Schematics for 2, 3, and 4-Wire Analog Input Devices

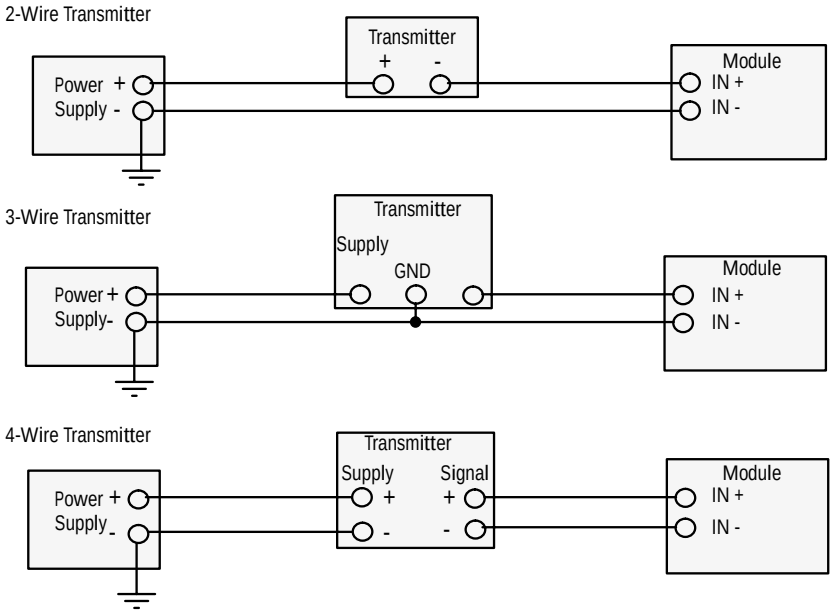

IMPORTANT The module does not provide loop power for analog inputs. Use a power supply that matches the transmitter specifications.

Wiring Guidelines

ATTENTION

To prevent shock hazard, care should be taken when wiring the module to analog signal sources. Before wiring any analog module, disconnect power from the SLC 500 system and from any other source to the analog module.

Follow the guidelines below when planning your system wiring.

- To limit noise, keep signal wires as far away as possible from power and load lines.
- To ensure proper operation and high immunity to electrical noise, always use Belden™ 8761 (shielded, twisted-pair) or equivalent wire.
- Connect the shield drain wire to the shield terminal on the 1746-NI8 module. Up to four shield wires may be connected to each shield screw terminal that provides a connection to chassis ground.
- Tighten terminal screws using a screwdriver. Each screw should be turned tight enough to immobilize the wire's end. Excessive tightening can strip the terminal screw. The torque applied to each screw should not exceed 0.9 Nm (8 in-lb) for each terminal.
- Follow system grounding and wiring guidelines found in your *SLC 500 Modular Hardware Style Installation and Operation Manual*, publication 1747-6.2.

Input Devices

Transducer Source Impedance

If the source impedance of the input device and associated cabling is too high, it affects the accuracy of the channel data word. Source impedance of 500 ohms produces up to 0.05% of module error over and above the specified accuracy of the module.

You can compensate for device impedance error by implementing the following equation in your ladder program:

$$V_S = V_{measured} \times \frac{(R_s + R_{in})}{R_{in}}$$

where:

Vs = input device voltage

Rs = input device impedance

Rin = 1746-NI8 input impedance (See Specifications on page 17.)

Wiring Input Devices to the 1746-NI8

After the analog input module is properly installed in the chassis, follow the wiring procedure below using Belden 8761 cable.

ATTENTION

Care should be taken to avoid connecting a voltage source to a current input module. Improper module operation or damage to the voltage source can occur.

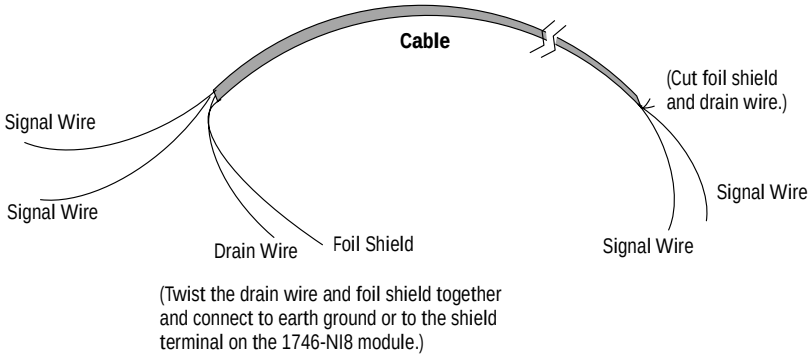

To wire your 1746-NI8 module follow these steps.

1. At each end of the cable, strip some casing to expose the individual wires.
2. Trim the signal wires to 50 mm (2 inch) lengths. Strip about 5 mm (3/16 inch) of insulation away to expose the end of the wire.
3. At one end of the cable, twist the drain wire and foil shield together. This end of the cable is connected to one of the shield terminals on the 1746-NI8 module. Connect shields for channels 0 through 3 to the upper shield terminal and shields for channels 4 through 7 to the lower shield terminal.
4. At the other end of the cable, cut the drain wire and foil shield back to the cable.
5. Connect the signal wires and shield drain wire to the 1746-NI8 terminal block or interposing terminal block.
6. Connect the other end of the cable to the voltage or current transmitter terminals.
7. Repeat steps 1 through 6 for each channel on the module.

Specifications

Electrical Specifications

Description	Specification
Backplane Current Consumption	200 mA at 5V dc 100 mA at 24V dc
Backplane Power Consumption	3.4W maximum (1.0W at 5V dc, 2.4W at 24V dc)
Number of Channels	8 (backplane isolated)
I/O Chassis Location	Any I/O module slot except slot 0
A/D Conversion Method	Successive appoximation, switched capacitor
Input Filtering	Low-pass digital filter with programmable filter frequencies
Normal Mode Rejection (between [+] input and Analog Com	Provided by low-pass filter
Common Mode Rejection (between inputs and chassis ground)	Greater than or equal to 75 dB at DC Greater than or equal to 100 dB at 50/60 Hz
Input Filter Frequencies	1 Hz 2 Hz 5 Hz 10 Hz 20 Hz 50 Hz 75 Hz
Calibration	The module performs continuous autocalibration
Isolation	500V dc continuous between the analog inputs and the backplane 530V ac and 750V dc pulse withstand for one second
Common-Mode Voltage Range	±10.5V (15V maximum between any two terminals)

Physical Specifications

Description	Specification
LED Indicators	9 green status indicators one for each of 8 channels and one for module status
Module ID Code	Class 1 Interface: 3526 Class 3 Interface: 12726
Recommended Cable	Belden #8761 or equivalent
Maximum Wire Size	Two 14 AWG wires per terminal
Maximum Cable Impedance	Voltage Source (with less than 10Ω impedance): 40Ω maximum loop impedance, for <1LSB error Current Source (transmitter properly wired to its power supply): 250Ω maximum loop impedance, to meet common-mode voltage requirements
Terminal Block	Removable, Allen-Bradley spare part Catalog Number 1746-RT25G

Environmental Specifications

Description	Specification
Operating Temperature	0°C to +55°C (32°F to 133°F) in any slot except 0 0°C to 60°C (32°F to 140°F) in right most slot of chassis
Storage Temperature	-40°C to +85°C (-40°F to +185°F)
Relative Humidity	5% to 95% (without condensation)
Agency Certification	UL listed CSA approved CE compliant for all applicable directives
Hazardous Environment Classification	Class 1 Division 2 Hazardous Environment

Input Specifications

Description	Specification
Type of Input (Selectable)	±10V dc 1 to 5V dc 0 to 5V dc 0 to 10V dc 0 to 20 mA 4 to 20 mA ±20 mA 0 to 1 mA
Type of Data (Selectable)	Engineering Units Scaled-for-PID Proportional Counts (-32,768 to +32,767 range) Proportional Counts (User Defined Range, Class 3 only) 1746-NI4 Data Format
Input Impedance	1 MΩ
Voltage Input (maximum)	±30V between any two signal terminals
Current Input (maximum)	30 mA
Time to Detect Open Circuit	1 module scan
Input Step Response	(1)
Input Resolution	1 mV or 1 µA
Display Resolution	1 mV or 1 µA
Overall Module Accuracy (0°C to +60°C, +32°F to +140°F)	Voltage input types (±10V dc, 1 to 5V dc, 0 to 5V dc, 0 to 10V dc): ±0.1% Current Input Types (0 to 20 mA, 4 to 20 mA, ±20 mA):±0.05% Current Input Type (0 to 1 mA): ±0.5%
Overall Module Drift	Voltage input type: ±6 ppm/°C Current Input Type: ±12 ppm/°C

(1) Depends on filter selected. Refer to the *1746-NI8 User Manual*, publication 1746-6.8.

SLC 500 is a trademark of Rockwell Automation.
Belden is a trademark of Belden, Inc.

www.rockwellautomation.com

Power, Control and Information Solutions Headquarters

Americas: Rockwell Automation, 1201 South Second Street, Milwaukee, WI 53204-2496 USA, Tel: (1) 414.382.2000, Fax: (1) 414.382.4444
Europe/Middle East/Africa: Rockwell Automation, Vorstlaan/Boulevard du Souverain 36, 1170 Brussels, Belgium, Tel: (32) 2 663 0600, Fax: (32) 2 663 0640
Asia Pacific: Rockwell Automation, Level 14, Core F, Cyberport 3, 100 Cyberport Road, Hong Kong, Tel: (852) 2887 4788, Fax: (852) 2508 1846

Publication 1746-IN006A-US-P - February 2000 PN 40071-081-01 (A)
© 2006 Rockwell Automation, Inc. All rights reserved. Printed in Singapore.