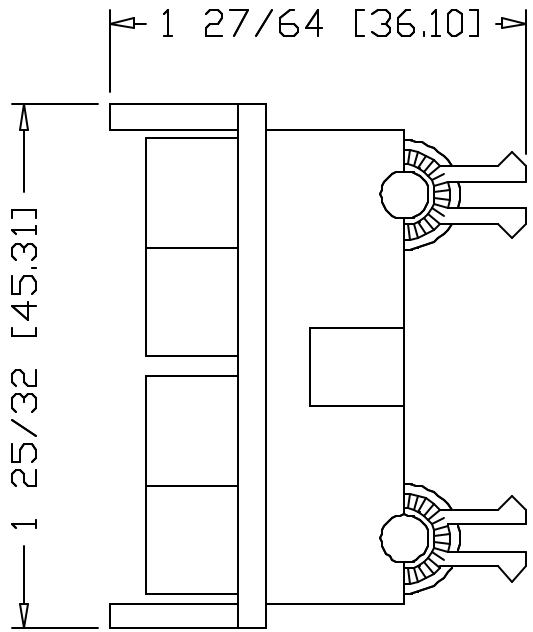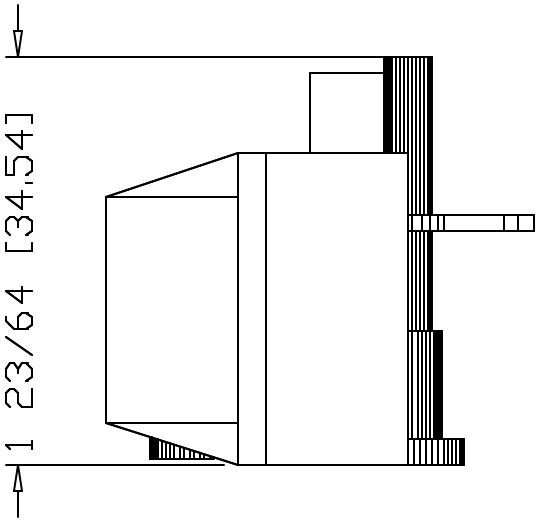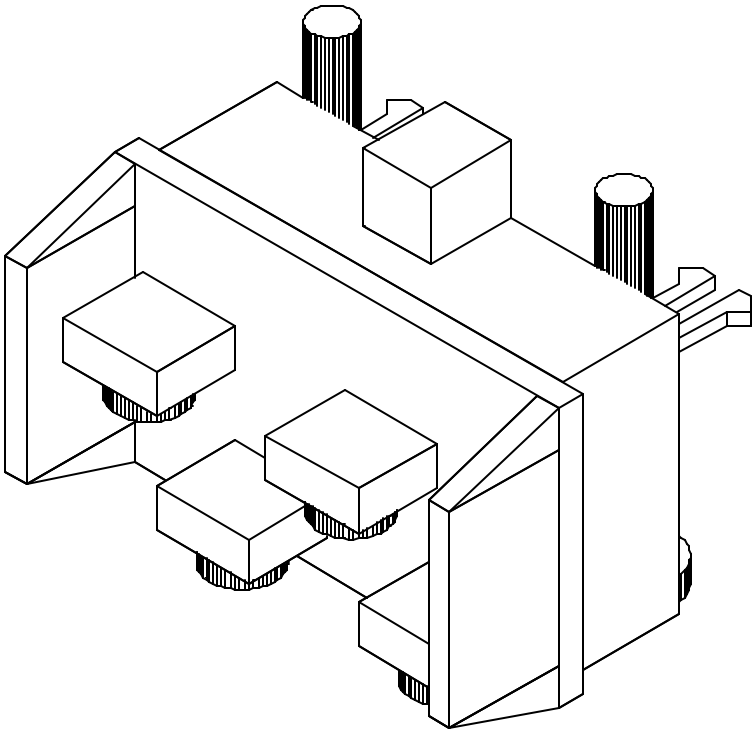800T-XA4
NEMA 2 CIRCUIT SHALLOW CONTACT BLOCK, 2 N.C.