Technical Data

Original Instructions

Allen-Bradley

1756 ControlLogix I/O Specifications

AC Digital Catalog Numbers	1756-IA8D, 1756-IA16, 1756-IA16K, 1756-IA16I, 1756-IA16IK, 1756-IA32, 1756-IA32K, 1756-IM16I, 1756-IM16IK, 1756-IN16, 1756-OA8, 1756-OA8D, 1756-OA8E, 1756-OA16, 1756-OA16K, 1756-OA16I, 1756-OA16IK, 1756-ON8
DC Digital Catalog Numbers	1756-IB16, 1756-IB16K, 1756-IB16D, 1756-IB16DK, 1756-IB16I, 1756-IB16IK, 1756-IB16IF, 1756-IB16IFK, 1756-IB16ISOE, 1756-IB16ISOEK, 1756-IB32, 1756-IB32K, 1756-IC16, 1756-IG16, 1756-IH16I, 1756-IH16ISOE, 1756-IV16, 1756-IV16K, 1756-IV32, 1756-IV32K, 1756-OB8, 1756-OB8EI, 1756-OB8I, 1756-OB16D, 1756-OB16DK, 1756-OB16E, 1756-OB16EK, 1756-OB16I, 1756-OB16IEF, 1756-OB16IEFK, 1756-OB16IEFS, 1756-OB16IS, 1756-OB32, 1756-OB32K, 1756-OC8, 1756-OG16, 1756-OH8I, 1756-OV16E, 1756-OV32E
Safety Catalog Numbers	1756-IB16S, 1756-OBV8S
Contact Catalog Numbers	1756-OW16I, 1756-OX8I
Analog Catalog Numbers	1756-IF6CIS, 1756-IF6I, 1756-IF8, 1756-IF8K, 1756-IF8I, 1756-IF8IK, 1756-IF16, 1756-IF16K, 1756-IF4FXOF2F, 1756-IF4FXOF2FK, 1756-IR6I, 1756-IRT8I, 1756-IRT8IK, 1756-IR12, 1756-IR12K, 1756-IT6I, 1756-IT6I2, 1756-IT16, 1756-IT16K, 1756-OF4, 1756-OF4K, 1756-OF6CI, 1756-OF6VI, 1756-OF8, 1756-OF8K, 1756-OF8I, 1756-OF8IK
HART Interface Catalog Numbers	1756-IF8H, 1756-IF8HK, 1756-IF8IH, 1756-IF8IHK, 1756-IF16H, 1756-IF16HK, 1756-IF16IH, 1756-IF16IHK, 1756-OF8H, 1756-OF8HK, 1756-OF8IH, 1756-OF8IHK
Specialty Catalog Numbers	1756-CFM, 1756-CMS1B1, 1756-CMS1C1, 1756-HSC, 1756-LSC8XIB8I, 1756-LSC8XIB8IK, 1756-PLS

Topic	Page
Summary of Changes	2
Available 1756 I/O Modules	3
ControlLogix I/O Accessories	270
Additional Resources	272

The ControlLogix® Architecture provides a wide range of input and output modules to span many applications, from high-speed digital to process control. The ControlLogix architecture uses Producer/Consumer technology, which allows input information and output status to be shared among multiple ControlLogix controllers.

Summary of Changes

This publication contains new and updated information as indicated in the following table.

Topic	Page
The 1756-IB16S and 1756-OBV8S modules are only compatible with a 1756 ControlLogix Chassis, Series C.	226, 234
Due to the higher internal power dissipation of the 1756-OBV8S module, do not install the 1756-OBV8S module next to any controller or communication module.	234

Available 1756 I/O Modules

Each 1756 ControlLogix standard and safety I/O module mounts in a ControlLogix chassis.

You can select these types of digital I/O modules.

Digital I/O Type	Description
Diagnostic	These modules provide diagnostic features to the point level. These modules have a **D** at the end of the catalog number.
Electronic fusing	These modules have internal electronic fusing to help prevent too much current from flowing through the module. These modules have an **E** at the end of the catalog number.
Individually isolated	These modules have individually isolated inputs or outputs. These modules have an **I** at the end of the catalog number.

Standard I/O Module Wiring

1756 ControlLogix standard I/O modules require either a Removable Terminal Block (RTB) or a 1492 interface module (IFM) to connect all field-side wiring. RTBs and IFMs are not included with the I/O modules. They must be ordered separately. See 1756 Removable Terminal Blocks on page 271 and Wiring Systems on page 272.

Safety I/O Module Wiring

1756-IB16S (1756 ControlLogix 16-point Sinking Safety Input Module) has been agency certified using only the ControlLogix RTBs (1756-TBCHS or 1756-TBS6HS). RTBs are not included with the I/O modules. They must be ordered separately. See 1756 Removable Terminal Blocks on page 271.

1756-OBV8S (ControlLogix 8-point Safety Bipolar/Sourcing Output Module) has been agency certified using only the ControlLogix RTBs (1756-TBNHS and 1756-TBSHS). RTBs are not included with the I/O modules. They must be ordered separately. See 1756 Removable Terminal Blocks on page 271.

Any application that requires agency certification of the ControlLogix system by using other wiring termination methods may require application-specific approval by the certifying agency. RTBs are not included with the I/O modules. They must be ordered separately.

I/O Type	Cat. No.	Page	Cat. No.	Page
AC digital	1756-IA8D	5	1756-OA8	130
	1756-IA16, 1756-IA16K	8	1756-OA8D	133
	1756-IA16I, 1756-IA16IK	11	1756-OA8E	136
	1756-IA32, 1756-IA32K	14	1756-OA16, 1756-OA16K	139
	1756-IM16I, 1756-IM16IK	90	1756-OA16I, 1756-OA16IK	143
	1756-IN16	93	1756-ON8	214
DC digital	1756-IB16, 1756-IB16K	17	1756-OB8	146
	1756-IB16D, 1756-IB16DK	20	1756-OB8EI	149
	1756-IB16I, 1756-IB16IK	23	1756-OB8I	152
	1756-IB16IF, 1756-IB16IFK	27	1756-OB16D, 1756-OB16DK	155
	1756-IB16ISOE, 1756-IB16ISOEK	30	1756-OB16E, 1756-OB16EK	159
	1756-IB32, 1756-IB32K	33	1756-OB16I	163
	1756-IC16	36	1756-OB16IEF, 1756-OB16IEFK	166
	1756-IG16	81	1756-OB16IEFS	169
	1756-IH16I	84	1756-OB16IS	172
	1756-IH16ISOE	87	1756-OB32, 1756-OB32K	175
	1756-IV16, 1756-IV16K	124	1756-OC8	178
	1756-IV32, 1756-IV32K	127	1756-OG16	208
			1756-OH8I	211
			1756-OV16E	218
			1756-OV32E	222
Safety	1756-IB16S	226	1756-OBV8S	234
Contact			1756-OW16I	244
			1756-OX8I	247
Analog	1756-IF6CIS	43	1756-OF4, 1756-OF4K	181
	1756-IF6I	47	1756-OF6CI	185
	1756-IF8, 1756-IF8K	51	1756-OF6VI	189
	1756-IF8I, 1756-IF8IK	59	1756-OF8, 1756-OF8K	192
	1756-IF16, 1756-IF16K	68	1756-OF8I, 1756-OF8IK	200
	1756-IF4FXOF2F, 1756-IF4FXOF2FK	39		
	1756-IR6I	96		
	1756-IRT8I, 1756-IRT8IK	101		
	1756-IR12, 1756-IR12K	107		
	1756-IT6I	111		
	1756-IT6I2	115		
	1756-IT16, 1756-IT16K	119		
HART interface	1756-IF8H, 1756-IF8HK	56	1756-OF8H, 1756-OF8HK	196
	1756-IF8IH, 1756-IF8IHK	64	1756-OF8IH, 1756-OF8IHK	204
	1756-IF16H, 1756-IF16HK	73		
	1756-IF16IH, 1756-IF16IHK	77		
Specialty	1756-CFM	250	1756-LSC8XIB8I, 1756-LSC8XIB8IK	261
	1756-CMS1B1, 1756-CMS1C1	255	1756-PLS	265
	1756-HSC	257		

1756-IA8D

ControlLogix 120V AC diagnostic input module

Simplified Schematic

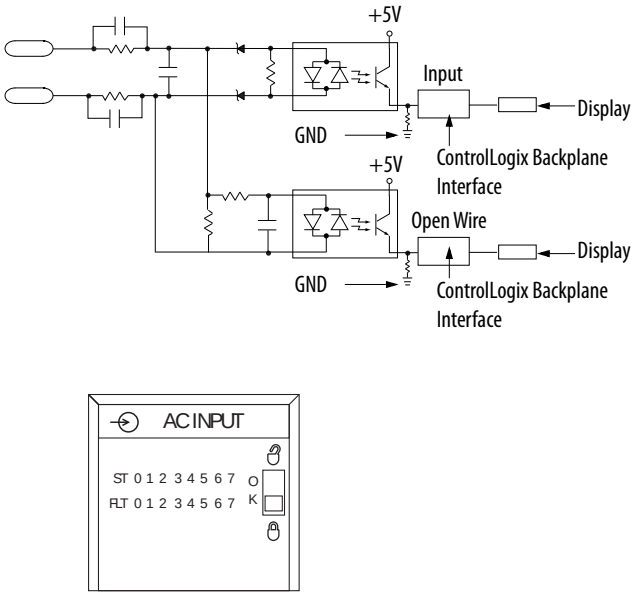

1756-IA8D

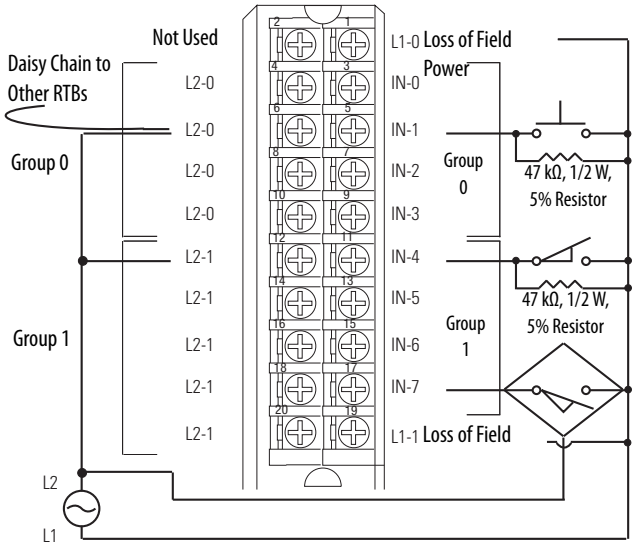

Diagnostic Specifications - 1756-IA8D

Attribute	1756-IA8D
Open wire	Off-state leakage current 1.5 mA min
Loss of power	Transition range 46…85V AC
Time stamp of diagnostics	±1 ms

Technical Specifications - 1756-IA8D

Attribute	1756-IA8D
Inputs	Eight diagnostic (4 points/group)
Operating voltage range[1]	79…132V AC, 47…63 Hz
Input delay time (screw to backplane) Off to On On to Off	 Hardware delay: 10 ms max + filter time User-selectable filter time: 1 ms or 2 ms Hardware delay: 8 ms max + filter time User-selectable filter time: 9 ms or 18 ms
Current draw @ 5.1V	100 mA
Current draw @ 24V	3 mA
Total backplane power	0.58 W
Power dissipation, max	4.5 W @ 60 °C (140 °F)
Thermal dissipation	15.35 BTU/hr
Off-state voltage, max	20V
Off-state current, max	2.5 mA

Technical Specifications - 1756-IA8D (continued)

Attribute	1756-IA8D
On-state current, min	5 mA @ 74V AC
On-state current, max	16 mA @ 132V AC
Inrush current, max	250 mA
Input impedance, max	8.25 kΩ @ 132V AC, 60 Hz
Cyclic update time	200 µs…750 ms
Change of state	Software configurable
Time stamp of inputs	±200 µs
Isolation voltage	125V (continuous), basic insulation type, inputs to backplane, and input group-to-group No isolation between individual group inputs
Module keying	Electronic, software configurable
Removable terminal block housing	1756-TBNH 1756-TBSH
RTB keying	User-defined mechanical
Slot width	1
Wire category	1(2) - on signal ports
Enclosure type	None (open-style)
North American temperature code	T4A

(1) UL certification for 120V 50/60 Hz nominal. Rockwell Automation specified to 74…132V, 47…63 Hz.

(2) Use this conductor category information for planning conductor routing as described in the system-level installation manual. See the Industrial Automation Wiring and Grounding Guidelines, publication 1770-4.1.

Environmental Specifications - 1756-IA8D

Attribute	1756-IA8D
Temperature, operating IEC 60068-2-1 (Test Ad, Operating Cold), IEC 60068-2-2 (Test Bd, Operating Dry Heat), IEC 60068-2-14 (Test Nb, Operating Thermal Shock)	0…60 °C (32…140 °F)
Temperature, surrounding air, max	60 °C (140 °F)
Temperature, nonoperating IEC 60068-2-1 (Test Ab, Unpackaged Nonoperating Cold), IEC 60068-2-2 (Test Bb, Unpackaged Nonoperating Dry Heat), IEC 60068-2-14 (Test N/A, Unpackaged Nonoperating Thermal Shock)	-40…+85 °C (-40…+185 °F)
Relative humidity IEC 60068-2-30 (Test dB, Unpackaged Damp Heat)	5…95% noncondensing
Vibration IEC 60068-2-6 (Test Fc, Operating)	2 g @ 10…500 Hz
Shock, operating IEC 60068-2-27 (Test Ea, Unpackaged Shock)	30 g
Shock, nonoperating IEC 60068-2-27 (Test Ea, Unpackaged Shock)	50 g
Emissions	IEC 61000-6-4
ESD immunity IEC 61000-4-2	6 kV contact discharges 8 kV air discharges

Environmental Specifications - 1756-IA8D (continued)

Attribute	1756-IA8D
Radiated RF immunity IEC 61000-4-3	10V/m with 1 kHz sine-wave 80% AM from 80…2000 MHz 10V/m with 200 Hz 50% Pulse 100% AM @ 900 MHz 10V/m with 200 Hz 50% Pulse 100% AM @ 1890 MHz 3V/m with 1 kHz sine-wave 80% AM from 2000…2700 MHz
EFT/B immunity IEC 61000-4-4	±4 kV at 5 kHz on signal ports
Surge transient immunity IEC 61000-4-5	±1 kV line-line (DM) and ±2 kV line-earth (CM) on signal ports
Conducted RF immunity IEC 61000-4-6	10V rms with 1 kHz sine-wave 80% AM from 150 kHz…80 MHz

Certifications - 1756-IA8D

Certification (when product is marked)[1]	1756-IA8D
UL	UL Listed Industrial Control Equipment. See UL File E65584.
CSA	CSA Certified Process Control Equipment. See CSA File LR54689C. CSA Certified Process Control Equipment for Class I, Division 2 Group A,B,C,D Hazardous Locations. See CSA File LR69960C.
CE	European Union 2014/30/EU EMC Directive, compliant with: • EN 61326-1; Meas./Control/Lab., Industrial Requirements • EN 61000-6-2; Industrial Immunity • EN 61000-6-4; Industrial Emissions • EN 61131-2; Programmable Controllers (Clause 8, Zone A & B) European Union 2014/35/EU LVD, compliant with: EN 61131-2; Programmable Controllers (Clause 11)
RCM	Australian Radiocommunications Act, compliant with: EN 61000-6-4; Industrial Emissions
FM	FM Approved Equipment for use in Class I Division 2 Group A,B,C,D Hazardous Locations
KC	Korean Registration of Broadcasting and Communications Equipment, compliant with Article 58-2 of Radio Waves Act, Clause 3
EAC	Russian Customs Union TR CU 020/2011 EMC Technical Regulation Russian Customs Union TR CU 004/2011 LV Technical Regulation

(1) See the Product Certification link at rok.auto/certifications for Declarations of Conformity, Certificates, and other certification details.

1756-IA16, 1756-IA16K

ControlLogix 120V AC input module

Simplified Schematic

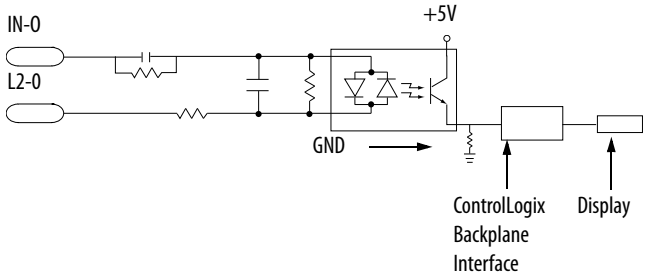

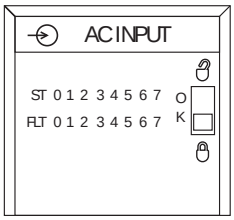

1756-IA16, 1756-IA16K

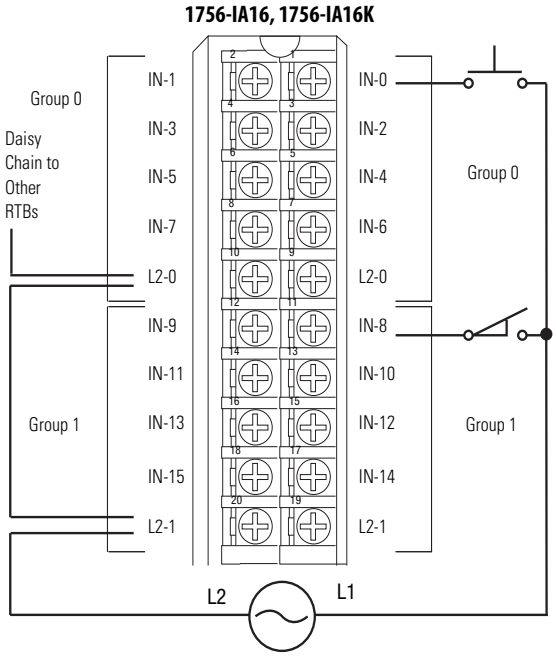

Technical Specifications - 1756-IA16, 1756-IA16K

Attribute	1756-IA16, 1756-IA16K
Inputs	16 (8 points/group)
Voltage category	120V AC 50/60 Hz
Operating voltage range[1]	74…132V AC, 47…63 Hz
Input delay time (screw to backplane) Off to On On to Off	 Hardware delay: 10 ms max + filter time User-selectable filter time: 1 ms or 2 ms Hardware delay: 8 ms max + filter time User-selectable filter time: 9 ms or 18 ms
Current draw @ 5.1V	100 mA
Current draw @ 24V	2 mA
Total backplane power	0.58 W
Power dissipation, max	5.8 W @ 60 °C (140 °F)
Thermal dissipation	18.41 BTU/hr
Off-state voltage, max	20V
Off-state current, max	2.5 mA
On-state current, min	5 mA @ 74V AC
On-state current, max	13 mA @ 132V AC
Inrush current, max	250 mA peak (decaying to <37% in 22 ms, without activation)

Technical Specifications - 1756-IA16, 1756-IA16K

Attribute	1756-IA16, 1756-IA16K
Input impedance, max	10.15 kΩ @ 132V AC, 60 Hz
Cyclic update time	200 µs…750 ms
Change of state	Software configurable
Time stamp of inputs	±200 µs
Isolation voltage	125V (continuous), basic insulation type, inputs-to-backplane, and input group-to-group No isolation between individual group inputs
Module keying	Electronic, software configurable
Removable terminal block housing	1756-TBNH 1756-TBSH
RTB keying	User-defined mechanical
Slot width	1
Wire category	1(2)
Enclosure type	None (open-style)
North American temperature code	T4

(1) UL certification for 120V 50/60 Hz nominal. Rockwell Automation specified to 74…132V, 47…63 Hz.

(2) Use this conductor category information for planning conductor routing as described in the system-level installation manual. See the Industrial Automation Wiring and Grounding Guidelines, publication 1770-4.1.

Environmental Specifications - 1756-IA16, 1756-IA16K

Attribute	1756-IA16, 1756-IA16K
Temperature, operating IEC 60068-2-1 (Test Ad, Operating Cold), IEC 60068-2-2 (Test Bd, Operating Dry Heat), IEC 60068-2-14 (Test Nb, Operating Thermal Shock)	0…60 °C (32…140 °F)
Temperature, surrounding air, max	60 °C (140 °F)
Temperature, nonoperating IEC 60068-2-1 (Test Ab, Unpackaged Nonoperating Cold), IEC 60068-2-2 (Test Bb, Unpackaged Nonoperating Dry Heat), IEC 60068-2-14 (Test N/A, Unpackaged Nonoperating Thermal Shock)	-40…+85 °C (-40…+185 °F)
Relative humidity IEC 60068-2-30 (Test dB, Unpackaged Damp Heat)	5…95% noncondensing
Vibration IEC 60068-2-6 (Test Fc, Operating)	2 g @ 10…500 Hz
Shock, operating IEC 60068-2-27 (Test Ea, Unpackaged Shock)	30 g
Shock, nonoperating IEC 60068-2-27 (Test Ea, Unpackaged Shock)	50 g
Emissions	IEC 61000-6-4
ESD immunity IEC 61000-4-2	6 kV contact discharges 8 kV air discharges
Radiated RF immunity IEC 61000-4-3	10V/m with 1 kHz sine-wave 80% AM from 80…2000 MHz 10V/m with 200 Hz 50% Pulse 100% AM @ 900 MHz 10V/m with 200 Hz 50% Pulse 100% AM @ 1890 MHz 3V/m with 1 kHz sine-wave 80% AM from 2000…2700 MHz
EFT/B immunity IEC 61000-4-4	±4 kV at 5 kHz on signal ports

Environmental Specifications - 1756-IA16, 1756-IA16K

Attribute	1756-IA16, 1756-IA16K
Surge transient immunity IEC 61000-4-5	±1 kV line-line (DM) and ±2 kV line-earth (CM) on signal ports
Conducted RF immunity IEC 61000-4-6	10V rms with 1 kHz sine-wave 80% AM from 150 kHz…80 MHz
Oscillatory surge withstand IEEE C37.90.1	3 kV

Certifications - 1756-IA16, 1756-IA16K

Certification (when product is marked)[1]	1756-IA16, 1756-IA16K
UL	UL Listed Industrial Control Equipment. See UL File E65584.
CSA	CSA Certified Process Control Equipment. See CSA File LR54689C. CSA Certified Process Control Equipment for Class I, Division 2 Group A,B,C,D Hazardous Locations. See CSA File LR69960C.
CE	European Union 2014/30/EU EMC Directive, compliant with: • EN 61326-1; Meas./Control/Lab., Industrial Requirements • EN 61000-6-2; Industrial Immunity • EN 61000-6-4; Industrial Emissions • EN 61131-2; Programmable Controllers (Clause 8, Zone A & B) European Union 2014/35/EU LVD, compliant with: EN 61131-2; Programmable Controllers (Clause 11)
RCM	Australian Radiocommunications Act, compliant with: EN 61000-6-4; Industrial Emissions
FM	FM Approved Equipment for use in Class I Division 2 Group A,B,C,D Hazardous Locations
KC	Korean Registration of Broadcasting and Communications Equipment, compliant with: Article 58-2 of Radio Waves Act, Clause 3
EAC	Russian Customs Union TR CU 020/2011 EMC Technical Regulation Russian Customs Union TR CU 004/2011 LV Technical Regulation

(1) See the Product Certification link at rok.auto/certifications for Declarations of Conformity, Certificates, and other certification details.

1756-IA16I, 1756-IA16IK

ControlLogix 120V AC isolated input module

Simplified Schematic

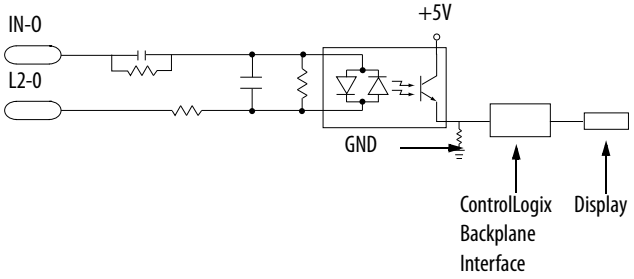

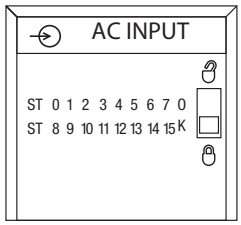

Additional jumper bars are available as catalog number 1756-JMPR.

1756-IA161, 1756-IA16IK

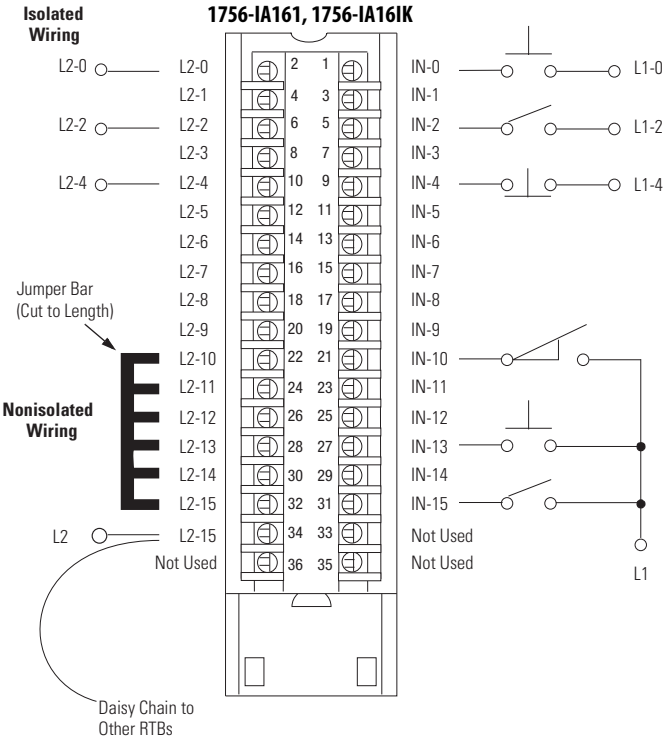

Technical Specifications - 1756-IA16I, 1756-IA16IK

Attribute	1756-IA16I, 1756-IA16IK
Inputs	16 individually isolated
Voltage category	120V AC 50/60 Hz
Operating voltage range[1]	79…132V AC, 47…63 Hz
Input voltage, nom	120V AC 50/60 Hz
Input delay time (screw to backplane) Off to On On to Off	 Hardware delay: 10 ms max + filter time User-selectable filter time: 1 ms or 2 ms Hardware delay: 8 ms max + filter time User-selectable filter time: 9 ms or 18 ms
Current draw @ 5.1V	125 mA
Current draw @ 24V	3 mA
Total backplane power	0.71 W
Power dissipation, max	4.9 W @ 60 °C (140 °F)
Thermal dissipation	16.71 BTU/hr
Off-state voltage, max	20V

Technical Specifications - 1756-IA16I, 1756-IA16IK

Attribute	1756-IA16I, 1756-IA16IK
Off-state current, max	2.5 mA
On-state current, min	5 mA @ 79V AC, 47…63 Hz
On-state current, max	15 mA @ 132V AC, 47…63 Hz
Inrush current, max	250 mA
Input impedance, max	8.8 kΩ @ 132V AC, 60 Hz
Cyclic update time	200 µs…750 ms
Change of state	Software configurable
Time stamp of inputs	±200 µs
Isolation voltage	125V (continuous), basic insulation type, inputs-to-backplane, and input-to-input
Module keying	Electronic, software configurable
Removable terminal block housing	1756-TBCH 1756-TBS6H
RTB keying	User-defined mechanical
Slot width	1
Wire category(2)	1 - on signal ports
Enclosure type	None (open-style)
North American temperature code	T4A

(1) UL certification for 120V 50/60 Hz nominal. Rockwell Automation specified to 74…132V, 47…63 Hz.

(2) Use this conductor category information for planning conductor routing as described in the system-level installation manual. See the Industrial Automation Wiring and Grounding Guidelines, publication 1770-4.1.

Environmental Specifications - 1756-IA16I, 1756-IA16IK

Attribute	1756-IA16I, 1756-IA16IK
Temperature, operating IEC 60068-2-1 (Test Ad, Operating Cold), IEC 60068-2-2 (Test Bd, Operating Dry Heat), IEC 60068-2-14 (Test Nb, Operating Thermal Shock)	0…60 °C (32…140 °F)
Temperature, surrounding air, max	60 °C (140 °F)
Temperature, nonoperating IEC 60068-2-1 (Test Ab, Unpackaged Nonoperating Cold), IEC 60068-2-2 (Test Bb, Unpackaged Nonoperating Dry Heat), IEC 60068-2-14 (Test N/A, Unpackaged Nonoperating Thermal Shock)	-40…+85 °C (-40…+185 °F)
Relative humidity IEC 60068-2-30 (Test dB, Unpackaged Damp Heat)	5…95% noncondensing
Vibration IEC 60068-2-6 (Test Fc, Operating)	2 g @ 10…500 Hz
Shock, operating IEC 60068-2-27 (Test Ea, Unpackaged Shock)	30 g
Shock, nonoperating IEC 60068-2-27 (Test Ea, Unpackaged Shock)	50 g
Emissions	IEC 61000-6-4
ESD immunity IEC 61000-4-2	6 kV contact discharges 8 kV air discharges

Environmental Specifications - 1756-IA16I, 1756-IA16IK

Attribute	1756-IA16I, 1756-IA16IK
Radiated RF immunity IEC 61000-4-3	10V/m with 1 kHz sine-wave 80% AM from 80…2000 MHz 10V/m with 200 Hz 50% Pulse 100% AM @ 900 MHz 10V/m with 200 Hz 50% Pulse 100% AM @ 1890 MHz 3V/m with 1 kHz sine-wave 80% AM from 2000…2700 MHz
EFT/B immunity IEC 61000-4-4	±4 kV at 5 kHz on signal ports
Surge transient immunity IEC 61000-4-5	±1 kV line-line (DM) and ±2 kV line-earth (CM) on signal ports
Conducted RF immunity IEC 61000-4-6	10V rms with 1 kHz sine-wave 80% AM from 150 kHz…80 MHz
Oscillatory surge withstand IEEE C37.90.1	3 kV

Certifications - 1756-IA16I, 1756-IA16IK

Certification (when product is marked)(1)	1756-IA16I, 1756-IA16IK
UL	UL Listed Industrial Control Equipment. See UL File E65584.
CSA	CSA Certified Process Control Equipment. See CSA File LR54689C. CSA Certified Process Control Equipment for Class I, Division 2 Group A,B,C,D Hazardous Locations. See CSA File LR69960C.
CE	European Union 2014/30/EU EMC Directive, compliant with: • EN 61131-2; Programmable Controllers (Clause 8, Zone A & B) • EN 61326-1; Meas./Control/Lab., Industrial Requirements • EN 61000-6-2; Industrial Immunity • EN 61000-6-4; Industrial Emissions European Union 2014/35/EU LVD Directive, compliant with: EN 61131-2; Programmable Controllers (Clause 11)
RCM	Australian Radiocommunications Act, compliant with: EN 61000-6-4; Industrial Emissions
FM	FM Approved Equipment for use in Class I Division 2 Group A,B,C,D Hazardous Locations
KC	Korean Registration of Broadcasting and Communications Equipment, compliant with: Article 58-2 of Radio Waves Act, Clause 3
EAC	Russian Customs Union TR CU 020/2011 EMC Technical Regulation Russian Customs Union TR CU 004/2011 LV Technical Regulation

(1) See the Product Certification link at rok.auto/certifications for Declarations of Conformity, Certificates, and other certification details.

1756-IA32, 1756-IA32K

ControlLogix AC (74...132V) input module

Simplified Schematic

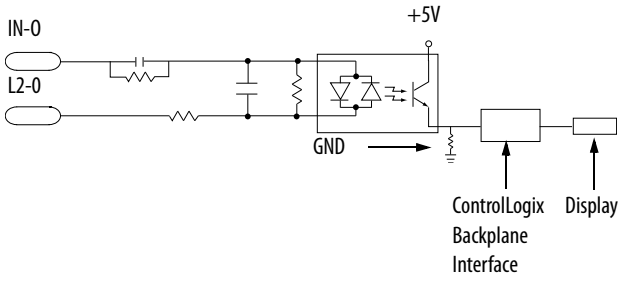

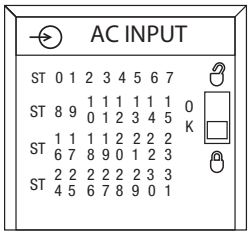

1756-IA32, 1756-IA32K

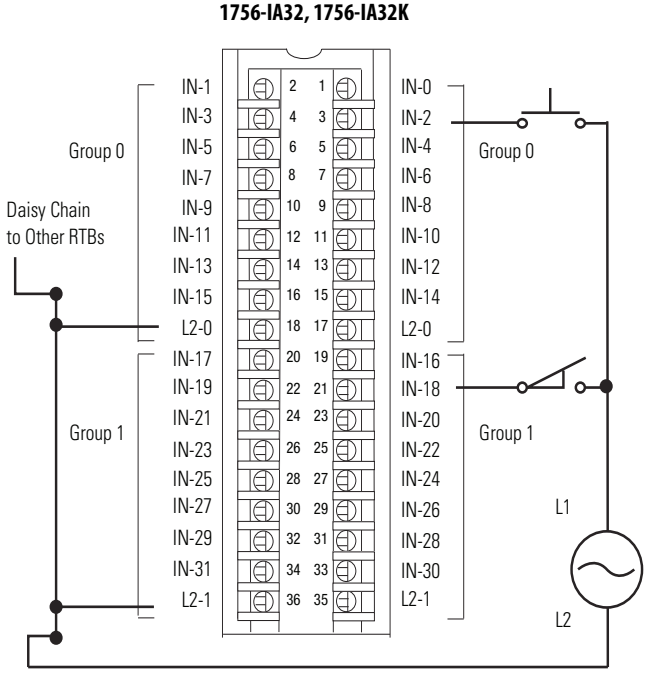

Technical Specifications - 1756-IA32, 1756-IA32K

Attribute	1756-IA32, 1756-IA32K
Inputs	32 (16 points/group)
Voltage category	120V AC 50/60 Hz
Operating voltage range	74…132V AC, 47…63 Hz
Input voltage, nom	120V AC 50/60 Hz
Input delay time (screw to backplane) Off to On On to Off	 Hardware delay: 1.5 ms nom/10 ms max + filter time User-selectable filter time: 1 ms or 2 ms Hardware delay: 1 ms nom/8 ms max + filter time User-selectable filter time: 9 ms or 18 ms
Current draw @ 5.1V	165 mA
Current draw @ 24V	2 mA
Total backplane power	0.9 W
Power dissipation, max	6.1 W @ 60 °C (140 °F)
Thermal dissipation	20.8 BTU/hr
Off-state voltage, max	20V
Off-state current, max	2.5 mA
On-state current, min	5 mA @ 74V AC

Technical Specifications - 1756-IA32, 1756-IA32K

Attribute	1756-IA32, 1756-IA32K
On-state current, max	15 mA @ 132V AC
Inrush current, max	390 mA
Input impedance, max	14.0 kΩ @ 132V AC, 60 Hz
Cyclic update time	200 µs…750 ms
Change of stat	Software configurable
Time stamp of inputs	±200 µs
Isolation voltage	250V (continuous), basic insulation type, inputs-to-backplane 125V (continuous), basic insulation type, input group-to-group No isolation between individual group inputs
Module keying	Electronic, software configurable
Removable terminal block housing	1756-TBCH 1756-TBS6H
RTB keying	User-defined mechanical
Slot width	1
Wire category(1)	1 - on signal ports
Enclosure type	None (open-style)
North American temperature code	T4

(1) Use this Conductor Category information for planning conductor routing. Refer to Industrial Automation Wiring and Grounding Guidelines, publication 1770-4.1.

Environmental Specifications - 1756-IA32, 1756-IA32K

Attribute	1756-IA32, 1756-IA32K
Temperature, operating IEC 60068-2-1 (Test Ad, Operating Cold), IEC 60068-2-2 (Test Bd, Operating Dry Heat), IEC 60068-2-14 (Test Nb, Operating Thermal Shock)	0…60 °C (32…140 °F)
Temperature, surrounding air, max	60 °C (140 °F)
Temperature, nonoperating IEC 60068-2-1 (Test Ab, Unpackaged Nonoperating Cold), IEC 60068-2-2 (Test Bb, Unpackaged Nonoperating Dry Heat), IEC 60068-2-14 (Test N/A, Unpackaged Nonoperating Thermal Shock)	-40…+85 °C (-40…+185 °F)
Relative humidity IEC 60068-2-30 (Test dB, Unpackaged Damp Heat)	5…95% noncondensing
Vibration IEC 60068-2-6 (Test Fc, Operating)	2 g @ 10…500 Hz
Shock, operating IEC 60068-2-27 (Test Ea, Unpackaged Shock)	30 g
Shock, nonoperating IEC 60068-2-27 (Test Ea, Unpackaged Shock)	50 g
Emissions	IEC 61000-6-4
ESD immunity IEC 61000-4-2	6 kV contact discharges 8 kV air discharges
Radiated RF immunity IEC 61000-4-3	10V/m with 1 kHz sine-wave 80% AM from 80…2000 MHz 10V/m with 200 Hz 50% Pulse 100% AM @ 900 MHz 10V/m with 200 Hz 50% Pulse 100% AM @ 1890 MHz 3V/m with 1 kHz sine-wave 80% AM from 2000…2700 MHz

Environmental Specifications - 1756-IA32, 1756-IA32K

Attribute	1756-IA32, 1756-IA32K
EFT/B immunity IEC 61000-4-4	±4 kV at 5 kHz on signal ports
Surge transient immunity IEC 61000-4-5	±1 kV line-line (DM) and ±2 kV line-earth (CM) on signal ports
Conducted RF immunity IEC 61000-4-6	10V rms with 1 kHz sine-wave 80% AM from 150 kHz…80 MHz

Certifications - 1756-IA32, 1756-IA32K

Certification (when product is marked)(1)	1756-IA32, 1756-IA32K
UL	UL Listed Industrial Control Equipment. See UL File E65584.
CSA	CSA Certified Process Control Equipment. See CSA File LR54689C. CSA Certified Process Control Equipment for Class I, Division 2 Group A,B,C,D Hazardous Locations. See CSA File LR69960C.
CE	European Union 2014/30/EU EMC Directive, compliant with: • EN 61326-1; Meas./Control/Lab., Industrial Requirements • EN 61000-6-2; Industrial Immunity • EN 61000-6-4; Industrial Emissions • EN 61131-2; Programmable Controllers (Clause 8, Zone A & B) European Union 2014/35/EU LVD, compliant with: EN 61131-2; Programmable Controllers (Clause 11)
RCM	Australian Radiocommunications Act, compliant with: EN 61000-6-4; Industrial Emissions
KC	Korean Registration of Broadcasting and Communications Equipment, compliant with: Article 58-2 of Radio Waves Act, Clause 3
EAC	Russian Customs Union TR CU 020/2011 EMC Technical Regulation Russian Customs Union TR CU 004/2011 LV Technical Regulation

(1) See the Product Certification link at rok.auto/certifications for Declarations of Conformity, Certificates, and other certification details.

1756-IB16, 1756-IB16K

ControlLogix DC (10...31.2V) input module

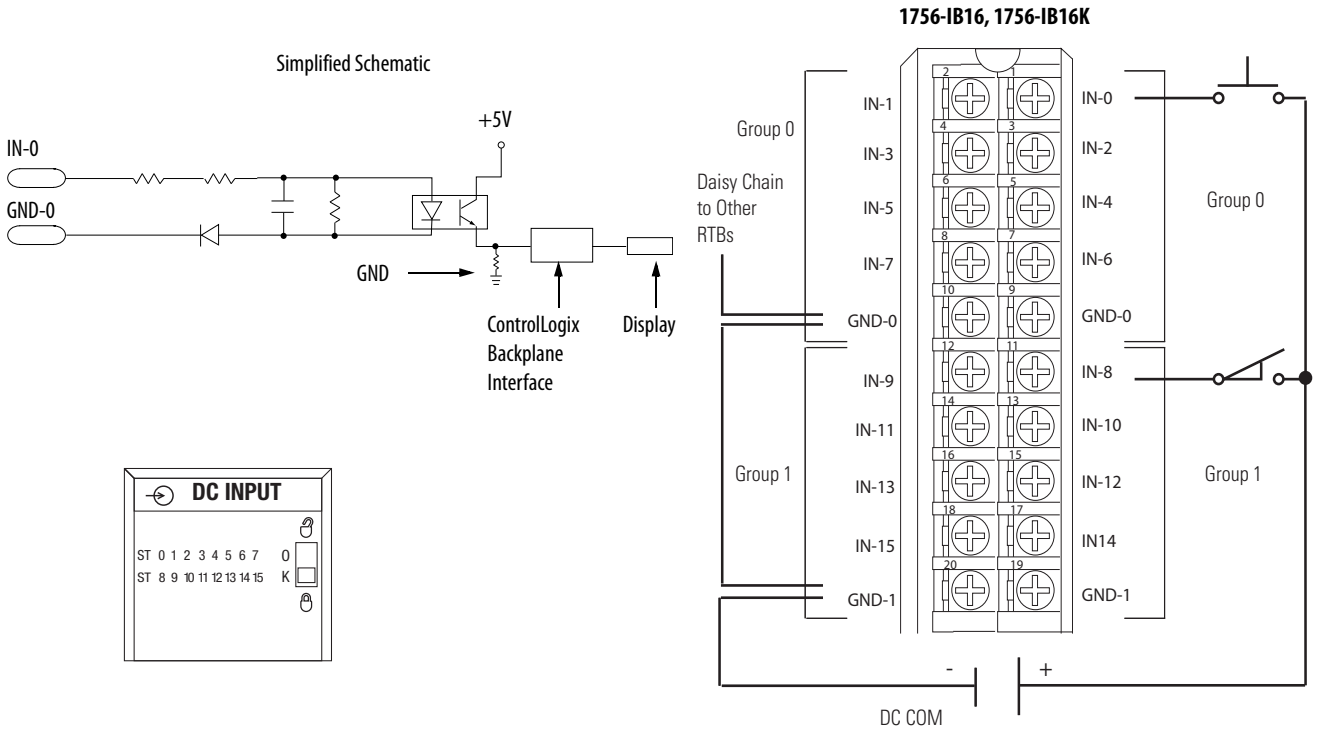

Technical Specifications - 1756-IB16, 1756-IB16K

Attribute	1756-IB16, 1756-IB16K
Inputs	16 (8 points/group)
Voltage category	12/24V DC sink
Operating voltage range	10…31.2V DC
Input voltage, nom	24V DC
Input delay time (screw to backplane) Off to On On to Off	 Hardware delay: 290 µs nom/1 ms max + filter time User-selectable filter time: 0 ms, 1 ms, or 2 ms Hardware delay: 700 µs nom/2 ms max + filter time User-selectable filter time: 0, 1, 2, 9, or 18 ms
Current draw @ 5.1V	100 mA
Current draw @ 24V	2 mA
Total backplane power	0.56 W
Power dissipation, max	5.1 W @ 60 °C (140 °F)
Thermal dissipation	17.39 BTU/hr
Off-state voltage, max	5V
Off-state current, max	1.5 mA
On-state current, min	2 mA @ 10V DC
On-state current, max	10 mA @ 31.2V DC

Technical Specifications - 1756-IB16, 1756-IB16K

Attribute	1756-IB16, 1756-IB16K
Inrush current, max	250 mA peak (decaying to < 37% in 22 ms, without activation)
Input impedance, max	3.12 kΩ @ 31.2V DC
Cyclic update time	200 µs…750 ms
Change of state	Software configurable
Time stamp of inputs	±200 µs
Isolation voltage	250V (continuous), basic insulation type, inputs-to-backplane, and input group-to-group No isolation between individual group inputs
Module keying	Electronic, software configurable
Removable terminal block housing	1756-TBNH 1756-TBSH
RTB keying	User-defined mechanical
Slot width	1
Wire category	1(1)
Enclosure type	None (open-style)
North American temperature code	T3C
IEC temperature code	T3
Reverse polarity protection	Yes

(1) Use this conductor category information for planning conductor routing as described in the system-level installation manual. See the Industrial Automation Wiring and Grounding Guidelines, publication 1770-4.1.

Environmental Specifications - 1756-IB16, 1756-IB16K

Attribute	1756-IB16, 1756-IB16K
Temperature, operating IEC 60068-2-1 (Test Ad, Operating Cold), IEC 60068-2-2 (Test Bd, Operating Dry Heat), IEC 60068-2-14 (Test Nb, Operating Thermal Shock)	0…60 °C (32…140 °F)
Temperature, surrounding air, max	60 °C (140 °F)
Temperature, nonoperating IEC 60068-2-1 (Test Ab, Unpackaged Nonoperating Cold), IEC 60068-2-2 (Test Bb, Unpackaged Nonoperating Dry Heat), IEC 60068-2-14 (Test N/A, Unpackaged Nonoperating Thermal Shock)	-40…+85 °C (-40…+185 °F)
Relative humidity IEC 60068-2-30 (Test dB, Unpackaged Damp Heat)	5…95% noncondensing
Vibration IEC 60068-2-6 (Test Fc, Operating)	2 g @ 10…500 Hz
Shock, operating IEC 60068-2-27 (Test Ea, Unpackaged Shock)	30 g
Shock, nonoperating IEC 60068-2-27 (Test Ea, Unpackaged Shock)	50 g
Emissions	IEC 61000-6-4
ESD immunity IEC 61000-4-2	6 kV contact discharges 8 kV air discharges
Radiated RF immunity IEC 61000-4-3	10V/m with 1 kHz sine-wave 80% AM from 80…2000 MHz 10V/m with 200 Hz 50% Pulse 100% AM @ 900 MHz 10V/m with 200 Hz 50% Pulse 100% AM @ 1890 MHz 3V/m with 1 kHz sine-wave 80% AM from 2000…2700 MHz

Environmental Specifications - 1756-IB16, 1756-IB16K

Attribute	1756-IB16, 1756-IB16K
EFT/B immunity IEC 61000-4-4	±4 kV at 5 kHz on signal ports
Surge transient immunity IEC 61000-4-5	±1 kV line-line (DM) and ±2 kV line-earth (CM) on signal ports
Conducted RF immunity IEC 61000-4-6	10V rms with 1 kHz sine-wave 80% AM from 150 kHz…80 MHz
Oscillatory surge withstand IEEE C37.90.1	3 kV

Certifications - 1756-IB16, 1756-IB16K

Certification (when product is marked)(1)	1756-IB16, 1756-IB16K
UL	UL Listed Industrial Control Equipment. See UL File E65584.
CSA	CSA Certified Process Control Equipment. See CSA File LR54689C. CSA Certified Process Control Equipment for Class I, Division 2 Group A,B,C,D Hazardous Locations. See CSA File LR69960C.
CE	European Union 2014/30/EU EMC Directive, compliant with: • EN 61326-1; Meas./Control/Lab., Industrial Requirements • EN 61000-6-2; Industrial Immunity • EN 61000-6-4; Industrial Emissions • EN 61131-2; Programmable Controllers (Clause 8, Zone A & B) European Union 2014/35/EU LVD, compliant with: EN 61131-2; Programmable Controllers (Clause 11)
RCM	Australian Radiocommunications Act, compliant with: EN 61000-6-4; Industrial Emissions
Ex	European Union 2014/34/EU ATEX Directive, compliant with: • EN 60079-15; Potentially Explosive Atmospheres, Protection "n" • EN 60079-0; General Requirements II 3 G Ex nA IIC T3 X Gc
FM	FM Approved Equipment for use in Class I Division 2 Group A,B,C,D Hazardous Locations
KC	Korean Registration of Broadcasting and Communications Equipment, compliant with: Article 58-2 of Radio Waves Act, Clause 3
EAC	Russian Customs Union TR CU 020/2011 EMC Technical Regulation Russian Customs Union TR CU 004/2011 LV Technical Regulation

(1) See the Product Certification link at rok.auto/certifications for Declarations of Conformity, Certificates, and other certification details.

1756-IB16D, 1756-IB16DK

ControlLogix DC (10...30V) diagnostic input module

Simplified Schematic

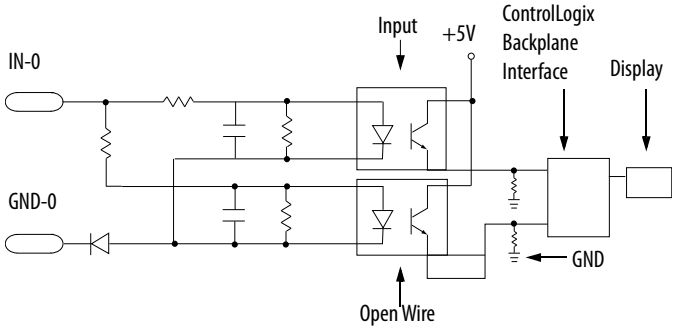

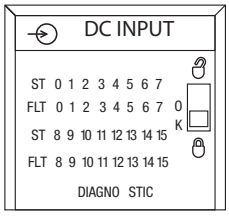

1756-IB16D, 1756-IB16DK

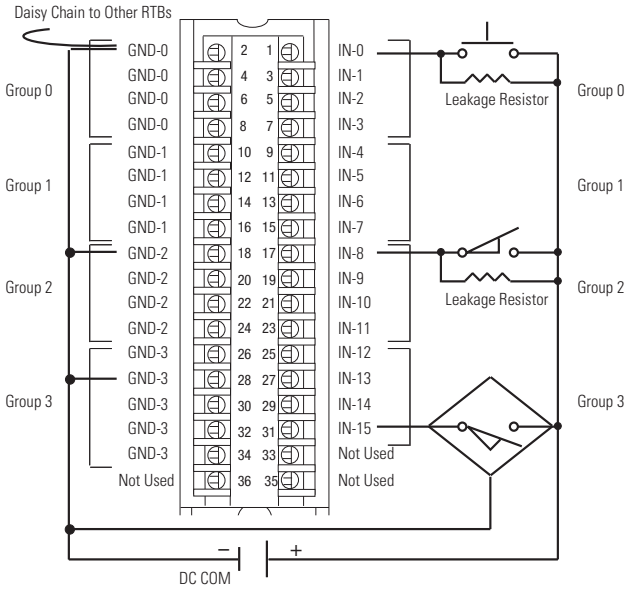

Recommended Leakage Resistor Size 1/4 W, 5%	Supply Voltage
3.9K	10V DC
5.6K	12V DC
15K	24V DC
20K	30V DC

Diagnostic Specifications - 1756-IB16D, 1756-IB16DK

Attribute	1756-IB16D, 1756-IB16DK
Open wire	Off-state leakage current 1.2 mA min
Time stamp of diagnostics	±1 ms

Technical Specifications - 1756-IB16D, 1756-IB16DK

Attribute	1756-IB16D, 1756-IB16DK
Inputs	Sixteen diagnostic (4 points/group)
Voltage category	12/24V DC sink
Operating voltage range	10…30V DC
Input voltage, nom	24V DC
Input delay time (screw to backplane) Off to On On to Off	 Hardware delay: 340 µs nom/1 ms max + filter time User-selectable filter time: 0 ms, 1 ms, or 2 ms Hardware delay: 740 µs nom/4 ms max + filter time User-selectable filter time: 0 ms, 1 ms, 9 ms, or 18 ms

Technical Specifications - 1756-IB16D, 1756-IB16DK

Attribute	1756-IB16D, 1756-IB16DK
Current draw @ 5.1V	150 mA
Current draw @ 24V	3 mA
Total backplane power	0.84 W
Power dissipation, max	5.8 W @ 60 °C (140 °F)
Thermal dissipation	19.78 BTU/hr
Off-state voltage, max	5V
Off-state current, max	1.5 mA
On-state current, min	2 mA @ 10V DC
On-state current, max	13 mA @ 30V DC
Inrush current, max	250 mA
Input impedance, max	2.31 kΩ @ 30V DC
Cyclic update time	200 µs…750 ms
Change of state	Software configurable
Time stamp of inputs	±200 µs
Isolation voltage	250V (continuous), basic insulation type, inputs-to-backplane, and input group-to-group No isolation between individual group inputs
Module keying	Electronic, software configurable
Removable terminal block housing	1756-TBCH 1756-TBS6H
RTB keying	User-defined mechanical
Slot width	1
Wire category	1(1)
Enclosure type	None (open-style)
North American temperature code	T3C
IEC temperature code	T3
Reverse polarity protection	Yes

(1) Use this conductor category information for planning conductor routing as described in the system-level installation manual. See the Industrial Automation Wiring and Grounding Guidelines, publication 1770-4.1.

Environmental Specifications - 1756-IB16D, 1756-IB16DK

Attribute	1756-IB16D, 1756-IB16DK
Temperature, operating IEC 60068-2-1 (Test Ad, Operating Cold), IEC 60068-2-2 (Test Bd, Operating Dry Heat), IEC 60068-2-14 (Test Nb, Operating Thermal Shock)	0…60 °C (32…140 °F)
Temperature, surrounding air, max	60 °C (140 °F)
Temperature, nonoperating IEC 60068-2-1 (Test Ab, Unpackaged Nonoperating Cold), IEC 60068-2-2 (Test Bb, Unpackaged Nonoperating Dry Heat), IEC 60068-2-14 (Test Na, Unpackaged Nonoperating Thermal Shock)	-40…+85 °C (-40…+185 °F)
Relative humidity IEC 60068-2-30 (Test dB, Unpackaged Damp Heat)	5…95% noncondensing
Vibration IEC 60068-2-6 (Test Fc, Operating)	2 g @ 10…500 Hz

Environmental Specifications - 1756-IB16D, 1756-IB16DK

Attribute	1756-IB16D, 1756-IB16DK
Shock, operating IEC 60068-2-27 (Test Ea, Unpackaged Shock)	30 g
Shock, nonoperating IEC 60068-2-27 (Test Ea, Unpackaged Shock)	50 g
Emissions	IEC 61000-6-4
ESD immunity IEC 61000-4-2	6 kV contact discharges 8 kV air discharges
Radiated RF immunity IEC 61000-4-3	10V/m with 1 kHz sine-wave 80% AM from 80…2000 MHz 10V/m with 200 Hz 50% Pulse 100% AM @ 900 MHz 10V/m with 200 Hz 50% Pulse 100% AM @ 1890 MHz 3V/m with 1 kHz sine-wave 80% AM from 2000…2700 MHz
EFT/B immunity IEC 61000-4-4	±4 kV at 5 kHz on signal ports
Surge transient immunity IEC 61000-4-5	±1 kV line-line (DM) and ±2 kV line-earth (CM) on signal ports
Conducted RF immunity IEC 61000-4-6	10V rms with 1 kHz sine-wave 80% AM from 150 kHz…80 MHz

Certifications - 1756-IB16D, 1756-IB16DK

Certification (when product is marked)(1)	1756-IB16D, 1756-IB16DK
UL	UL Listed Industrial Control Equipment. See UL File E65584.
CSA	CSA Certified Process Control Equipment. See CSA File LR54689C. CSA Certified Process Control Equipment for Class I, Division 2 Group A,B,C,D Hazardous Locations. See CSA File LR69960C.
CE	European Union 2014/30/EU EMC Directive, compliant with: • EN 61326-1; Meas./Control/Lab., Industrial Requirements • EN 61000-6-2; Industrial Immunity • EN 61000-6-4; Industrial Emissions • EN 61131-2; Programmable Controllers (Clause 8, Zone A & B) European Union 2014/35/EU LVD, compliant with: EN 61131-2; Programmable Controllers (Clause 11)
RCM	Australian Radiocommunications Act, compliant with: EN 61000-6-4; Industrial Emissions
KC	Korean Registration of Broadcasting and Communications Equipment, compliant with: Article 58-2 of Radio Waves Act, Clause 3
Ex	European Union 2014/34/EU ATEX Directive, compliant with: • EN 60079-15; Potentially Explosive Atmospheres, Protection "n" • EN 60079-0; General Requirements II 3 G Ex nA IIC T3 X Gc
FM	FM Approved Equipment for use in Class I Division 2 Group A,B,C,D Hazardous Locations
EAC	Russian Customs Union TR CU 020/2011 EMC Technical Regulation Russian Customs Union TR CU 004/2011 LV Technical Regulation

(1) See the Product Certification link at rok.auto/certifications for Declarations of Conformity, Certificates, and other certification details.

1756-IB16I, 1756-IB16IK

ControlLogix DC (10...30V) isolated input module

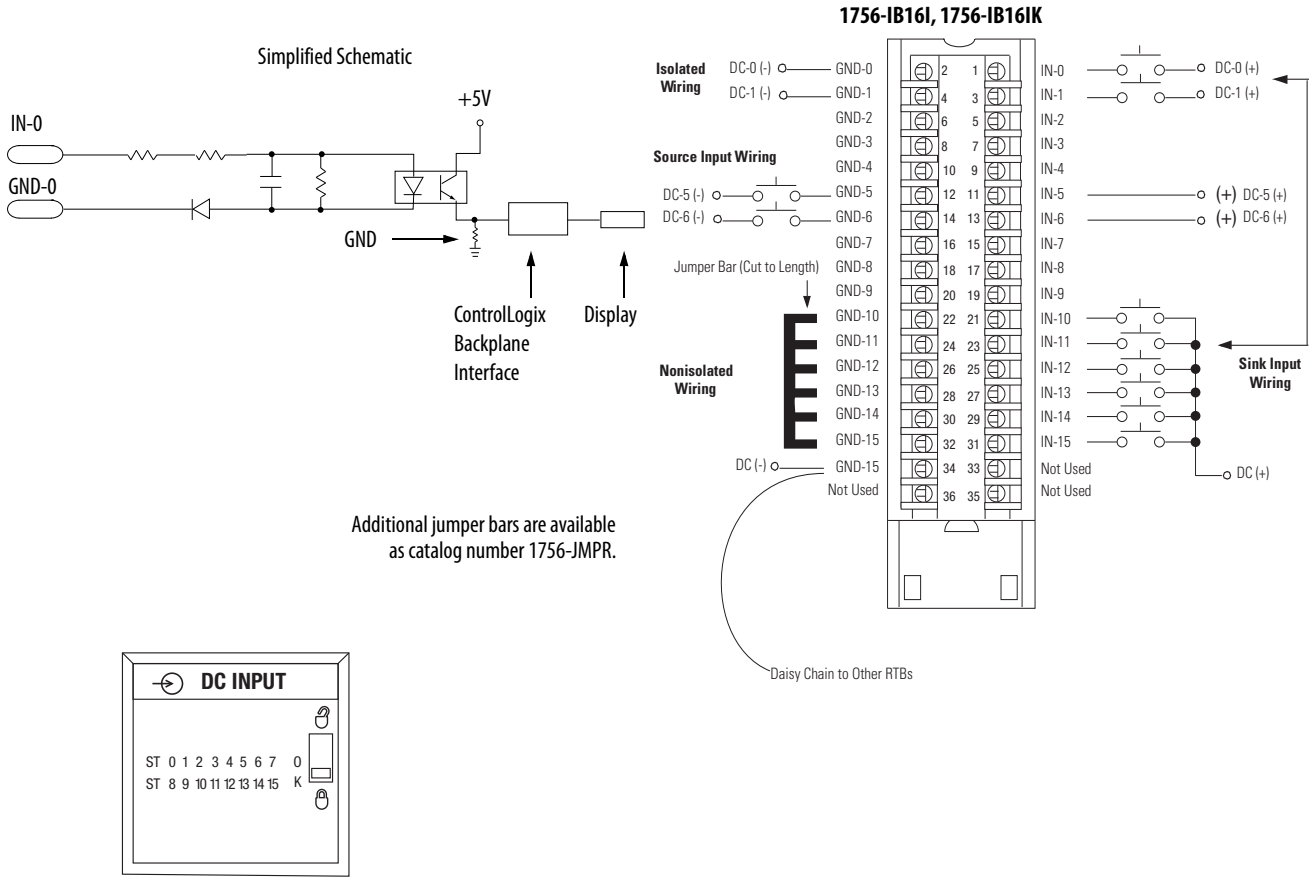

Technical Specifications - 1756-IB16I, 1756-IB16IK

Attribute	1756-IB16I, 1756-IB16IK
Inputs	16 individually isolated
Voltage category	12/24V DC sink/source
Operating voltage range	10…30V DC
Input voltage, nom	24V DC
Input delay time (screw to backplane) Off to On On to Off	 Hardware delay: 1 ms max + filter time User-selectable filter time: 0 ms, 1 ms, or 2 ms Hardware delay: 4 ms max + filter time User-selectable filter time: 0 ms, 1 ms, 2 ms, 9 ms, or 18 ms
Current draw @ 5.1V	100 mA
Current draw @ 24V	3 mA
Total backplane power	0.58 W
Power dissipation, max	5 W @ 60 °C (140 °F)
Thermal dissipation	17.05 BTU/hr
Off-state voltage, max	5V
Off-state current, max	1.5 mA
On-state current, min	2 mA @ 10V DC
On-state current, max	10 mA @ 30V DC
Inrush current, max	250 mA peak (decaying to < 37% in 22 ms, without activation)
Input impedance, max	3 kΩ @ 30V DC
Cyclic update time	200 µs…750 ms
Change of stat	Software configurable
Time stamp of inputs	±200 µs
Isolation voltage	250V (continuous), basic insulation type, inputs-to-backplane, and input-to-input
Module keying	Electronic, software configurable
Removable terminal block housing	1756-TBCH 1756-TBS6H
RTB keying	User-defined mechanical
Slot width	1
Wire category	1(1)
Enclosure type	None (open-style)
North American temperature code	T4
IEC temperature code	T4
Reverse polarity protection	Yes

(1) Use this conductor category information for planning conductor routing as described in the system-level installation manual. See the Industrial Automation Wiring and Grounding Guidelines, publication 1770-4.1.

Environmental Specifications - 1756-IB16I, 1756-IB16IK

Attribute	1756-IB16I, 1756-IB16IK
Temperature, operating IEC 60068-2-1 (Test Ad, Operating Cold), IEC 60068-2-2 (Test Bd, Operating Dry Heat), IEC 60068-2-14 (Test Nb, Operating Thermal Shock)	0…60 °C (32…140 °F)
Temperature, surrounding air, max	60 °C (140 °F)
Temperature, nonoperating IEC 60068-2-1 (Test Ab, Unpackaged Nonoperating Cold), IEC 60068-2-2 (Test Bb, Unpackaged Nonoperating Dry Heat), IEC 60068-2-14 (Test Na, Unpackaged Nonoperating Thermal Shock)	-40…+85 °C (-40…+185 °F)
Relative humidity IEC 60068-2-30 (Test dB, Unpackaged Damp Heat)	5…95% noncondensing
Vibration IEC 60068-2-6 (Test Fc, Operating)	2 g @ 10…500 Hz
Shock, operating IEC 60068-2-27 (Test Ea, Unpackaged Shock)	30 g
Shock, nonoperating IEC 60068-2-27 (Test Ea, Unpackaged Shock)	50 g
Emissions	IEC 61000-6-4
ESD immunity IEC 61000-4-2	6 kV contact discharges 8 kV air discharges
Radiated RF immunity IEC 61000-4-3	10V/m with 1 kHz sine-wave 80% AM from 80…2000 MHz 10V/m with 200 Hz 50% Pulse 100% AM @ 900 MHz 10V/m with 200 Hz 50% Pulse 100% AM @ 1890 MHz 3V/m with 1 kHz sine-wave 80% AM from 2000…2700 MHz
EFT/B immunity IEC 61000-4-4	±4 kV at 5 kHz on signal ports
Surge transient immunity IEC 61000-4-5	±1 kV line-line (DM) and ±2 kV line-earth (CM) on signal ports
Conducted RF immunity IEC 61000-4-6	10V rms with 1 kHz sine-wave 80% AM from 150 kHz…80 MHz
Oscillatory surge withstand IEEE C37.90.1	3 kV

Certifications - 1756-IB16I, 1756-IB16IK

Certification (when product is marked)[1]	1756-IB16I, 1756-IB16IK
UL	UL Listed Industrial Control Equipment. See UL File E65584.
CSA	CSA Certified Process Control Equipment. See CSA File LR54689C. CSA Certified Process Control Equipment for Class I, Division 2 Group A,B,C,D Hazardous Locations. See CSA File LR69960C.
CE	European Union 2014/30/EU EMC Directive, compliant with: • EN 61326-1; Meas./Control/Lab., Industrial Requirements • EN 61000-6-2; Industrial Immunity • EN 61000-6-4; Industrial Emissions • EN 61131-2; Programmable Controllers (Clause 8, Zone A & B) European Union 2014/35/EU LVD, compliant with: EN 61131-2; Programmable Controllers (Clause 11)
RCM	Australian Radiocommunications Act, compliant with: EN 61000-6-4; Industrial Emissions
Ex	European Union 2014/34/EU ATEX Directive, compliant with: • EN 60079-15; Potentially Explosive Atmospheres, Protection "n" • EN 60079-0; General Requirements II 3 G Ex nA IIC T4 X Gc
FM	FM Approved Equipment for use in Class I Division 2 Group A,B,C,D Hazardous Locations
KC	Korean Registration of Broadcasting and Communications Equipment, compliant with: Article 58-2 of Radio Waves Act, Clause 3
EAC	Russian Customs Union TR CU 020/2011 EMC Technical Regulation Russian Customs Union TR CU 004/2011 LV Technical Regulation

(1) See the Product Certification link at rok.auto/certifications for Declarations of Conformity, Certificates, and other certification details.

1756-IB16IF, 1756-IB16IFK

ControlLogix DC (10...30V) sinking or sourcing, isolated, fast input module

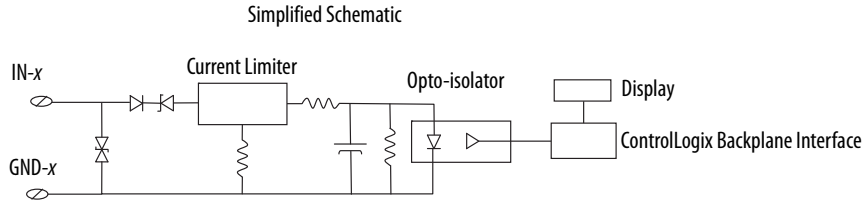

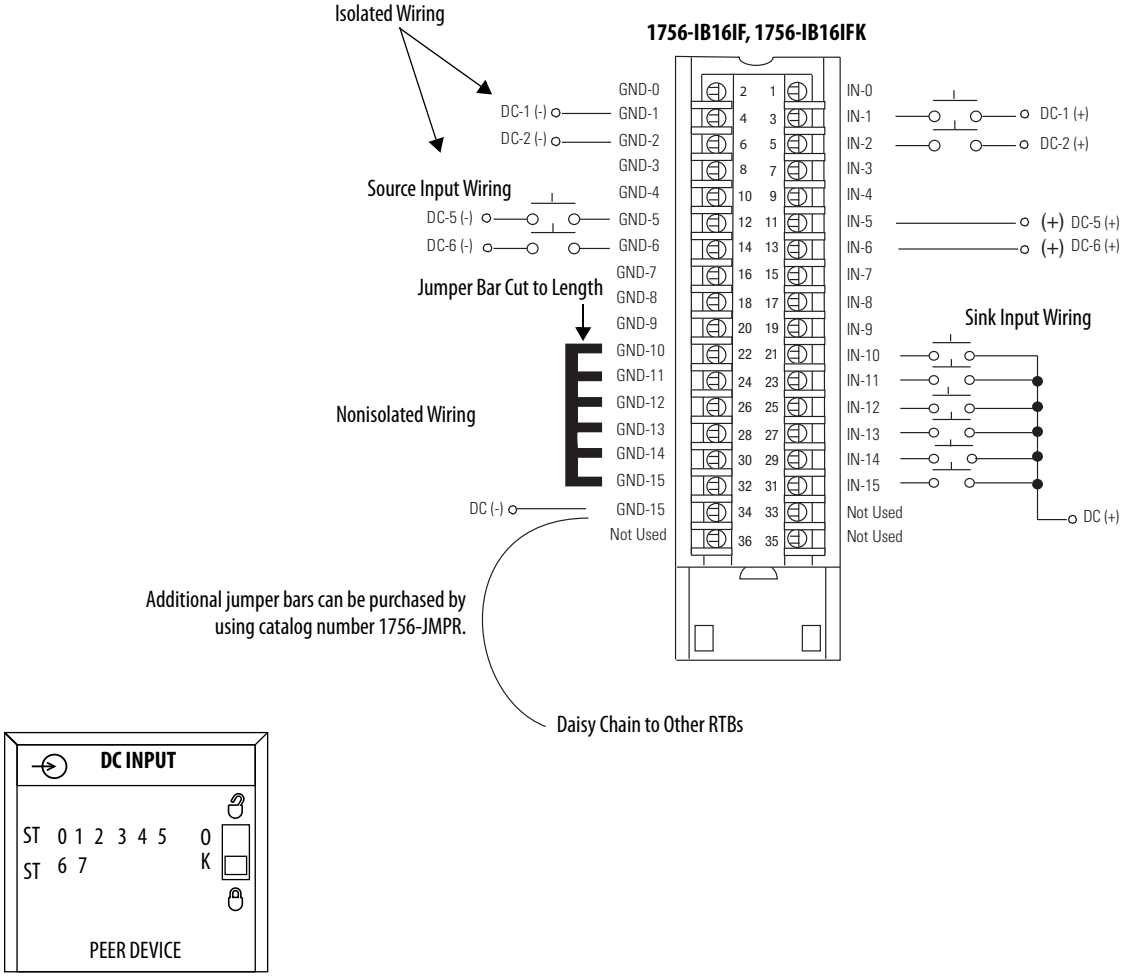

Technical Specifications - 1756-IB16IF, 1756-IB16IFK

Attribute	1756-IB16IF, 1756-IB16IFK
Inputs	16 individually isolated
Voltage category	12/24V DC sink/source
Operating voltage range	10…30V DC
Input voltage, nom	24V DC

Technical Specifications - 1756-IB16IF, 1756-IB16IFK

Attribute	1756-IB16IF, 1756-IB16IFK
Input delay time (screw to backplane) Off to On On to Off	 14 µs nom/23 µs max + user-configurable filter time of 0…30,000 µs 14 µs nom/23 µs max + user-configurable filter time of 0…30,000 µs
Current draw @ 5.1V	275 mA
Current draw @ 24V	3 mA
Total backplane power	1.47 W
Power dissipation	3.8 W @ 60 °C (140 °F)
Thermal dissipation	12.97 BTU/hr
Off-state voltage, max	5V
Off-state current, max	1.5 mA
On-state current, min	2 mA @ 10V DC
On-state current, max	5 mA @ 30V DC
Input impedance, max	6 kΩ @ 30V DC
Cyclic update time	200 µs…750 ms
Change of state	Software configurable
Time stamp of inputs	± 4 µs for inputs < 4 kHz ± 13 µs for inputs > 4 kHz
Isolation voltage	250V (continuous), reinforced insulation type, inputs-to-backplane 250V (continuous), basic insulation type, input-to-input
Module keying	Electronic, software configurable
Removable terminal block housing	1756-TBCH 1756-TBS6H
RTB keying	User-defined mechanical
Slot width	1
Wire category	1 on signal ports(1)
Enclosure type	None (open-style)
North American temperature code	T4A
IEC temperature code	T4
Reverse polarity protection	Yes

(1) Use this conductor category information for planning conductor routing as described in the system-level installation manual. See the Industrial Automation Wiring and Grounding Guidelines, publication 1770-4.1.

Environmental Specifications - 1756-IB16IF, 1756-IB16IFK

Attribute	1756-IB16IF, 1756-IB16IFK
Temperature, operating IEC 60068-2-1 (Test Ad, Operating Cold), IEC 60068-2-2 (Test Bd, Operating Dry Heat), IEC 60068-2-14 (Test Nb, Operating Thermal Shock)	0…60 °C (32…140 °F)
Temperature, surrounding air, max	60 °C (140 °F)
Temperature, nonoperating IEC 60068-2-1 (Test Ab, Unpackaged Nonoperating Cold), IEC 60068-2-2 (Test Bb, Unpackaged Nonoperating Dry Heat), IEC 60068-2-14 (Test Na, Unpackaged Nonoperating Thermal Shock)	-40…+85 °C (-40…+185 °F)

Environmental Specifications - 1756-IB16IF, 1756-IB16IFK

Attribute	1756-IB16IF, 1756-IB16IFK
Relative humidity IEC 60068-2-30 (Test dB, Unpackaged Damp Heat)	5…95% noncondensing
Vibration IEC 60068-2-6 (Test Fc, Operating)	2 g @ 10…500 Hz
Shock, operating IEC 60068-2-27 (Test Ea, Unpackaged Shock)	30 g
Shock, nonoperating IEC 60068-2-27 (Test Ea, Unpackaged Shock)	50 g
Emissions	IEC 61000-6-4
ESD immunity IEC 61000-4-2	6 kV contact discharges 8 kV air discharges
Radiated RF immunity IEC 61000-4-3	10V/m with 1 kHz sine-wave 80% AM from 80…2000 MHz 10V/m with 200 Hz 50% Pulse 100% AM @ 900 MHz 10V/m with 200 Hz 50% Pulse 100% AM @ 1890 MHz 3V/m with 1 kHz sine-wave 80% AM from 2000…2700 MHz
EFT/B immunity IEC 61000-4-4	±4 kV at 5 kHz on signal ports
Surge transient immunity IEC 61000-4-5	±1 kV line-line (DM) and ±2 kV line-earth (CM) on signal ports
Conducted RF immunity IEC 61000-4-6	10V rms with 1 kHz sine-wave 80% AM from 150 kHz…80 MHz

Certifications - 1756-IB16IF, 1756-IB16IFK

Certification (when product is marked)(1)	1756-IB16IF, 1756-IB16IFK
c-UL-us	UL Listed Industrial Control Equipment, certified for US and Canada. See UL File E65584. UL Listed for Class I, Division 2 Group A,B,C,D Hazardous Locations, certified for U.S. and Canada. See UL File E194810.
CE	European Union 2014/30/EU EMC Directive, compliant with: • EN 61326-1; Meas./Control/Lab., Industrial Requirements • EN 61000-6-2; Industrial Immunity • EN 61000-6-4; Industrial Emissions • EN 61131-2; Programmable Controllers (Clause 8, Zone A & B) European Union 2014/35/EU LVD, compliant with: EN 61131-2; Programmable Controllers (Clause 11)
RCM	Australian Radiocommunications Act, compliant with: EN 61000-6-4; Industrial Emissions
Ex	European Union 2014/34/EU ATEX Directive, compliant with: • EN 60079-15; Potentially Explosive Atmospheres, Protection "n" • EN 60079-0; General Requirements II 3 G Ex nA IIC T4 X Gc
KC	Korean Registration of Broadcasting and Communications Equipment, compliant with: Article 58-2 of Radio Waves Act, Clause 3
EAC	Russian Customs Union TR CU 020/2011 EMC Technical Regulation Russian Customs Union TR CU 004/2011 LV Technical Regulation

(1) See the Product Certification link at rok.auto/certifications for Declarations of Conformity, Certificates, and other certification details.

1756-IB16ISOE, 1756-IB16ISOEK

ControlLogix DC (10...55V) sequence of events input module

Simplified Schematic

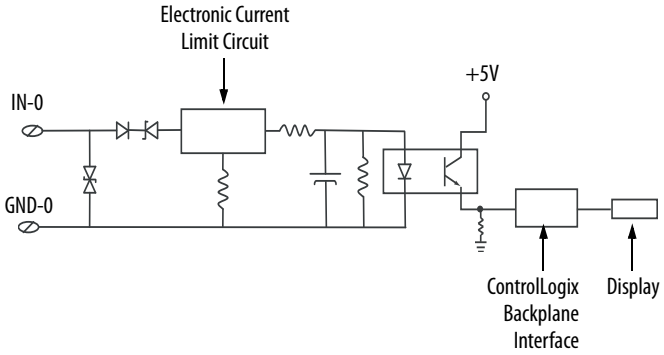

Additional jumper bars are available as catalog number 1756-JMPR.

1756-IB16ISOE, 1756-IB16ISOEK

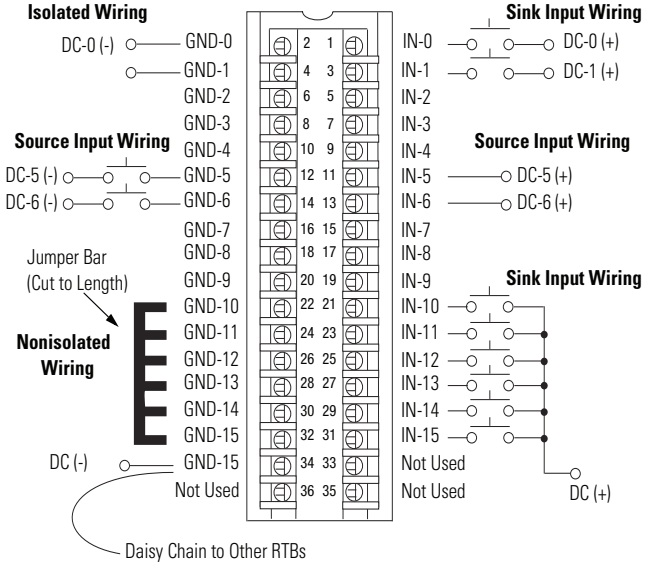

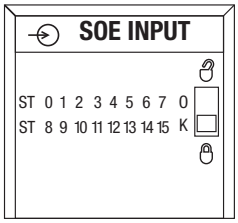

Technical Specifications - 1756-IB16ISOE, 1756-IB16ISOEK

Attribute	1756-IB16ISOE, 1756-IB16ISOEK
Inputs	16 individually isolated, sequence of events
Voltage category	24/48V DC sink/source
Operating voltage range	10…55V DC
Input voltage, nom	24V DC
Input delay time (screw to backplane) Off to On On to Off	Hardware delay: 10 µs nom/20 µs max + firmware scan: up to 25 µs + filter time: 0…50 ms + ASIC delay: 175 µs (FIFO) or 625 µs (Coordinated System Time per point) Hardware delay: 25 µs nom/50 µs max + firmware scan: up to 25 µs + filter time: 0…50 ms + ASIC delay: 175 µs (FIFO) or 625 µs (Coordinated System Time per point)
Current draw @ 5.1V	320 mA
Current draw @ 24V	2 mA
Total backplane power	1.7 W
Power dissipation, max	5.5 W @ 60 °C (140 °F)

Technical Specifications - 1756-IB16ISOE, 1756-IB16ISOEK

Attribute	1756-IB16ISOE, 1756-IB16ISOEK
Thermal dissipation	17.22 BTU/hr
Off-state voltage, max	5V
Off-state current, max	1.5 mA
On-state current, min	2.0 mA @ 9V DC
On-state current, nom	4.5 mA @ 24…31V DC
On-state current, max	5.1 mA @ 48…55V DC
Input impedance, max	10.8 kΩ @ 55V DC
Cyclic update time	200 µs…750 ms
Change of state	Software configurable
Time stamp of inputs	±100 µs
Isolation voltage	250V (continuous), basic insulation type, inputs-to-backplane 125V (continuous), basic insulation type, input-to-input
Module keying	Electronic, software configurable
Removable terminal block	1756-TBCH 1756-TBS6H
RTB keying	User-defined mechanical
Slot width	1
Wire category	1(1)
Enclosure type	None (open-style)
North American temperature code	T4
IEC temperature code	T4
Reverse polarity protection	Yes

(1) Use this conductor category information for planning conductor routing as described in the system-level installation manual. See the Industrial Automation Wiring and Grounding Guidelines, publication 1770-4.1.

Environmental Specifications - 1756-IB16ISOE, 1756-IB16ISOEK

Attribute	1756-IB16ISOE, 1756-IB16ISOEK
Temperature, operating IEC 60068-2-1 (Test Ad, Operating Cold), IEC 60068-2-2 (Test Bd, Operating Dry Heat), IEC 60068-2-14 (Test Nb, Operating Thermal Shock)	0…60 °C (32…140 °F)
Temperature, surrounding air, max	60 °C (140 °F)
Temperature, nonoperating IEC 60068-2-1 (Test Ab, Unpackaged Nonoperating Cold), IEC 60068-2-2 (Test Bb, Unpackaged Nonoperating Dry Heat), IEC 60068-2-14 (Test Na, Unpackaged Nonoperating Thermal Shock)	-40…+85 °C (-40…+185 °F)
Relative humidity IEC 60068-2-30 (Test dB, Unpackaged Damp Heat)	5…95% noncondensing
Vibration IEC 60068-2-6 (Test Fc, Operating)	2 g @ 10…500 Hz
Shock, operating IEC 60068-2-27 (Test Ea, Unpackaged Shock)	30 g
Shock, nonoperating IEC 60068-2-27 (Test Ea, Unpackaged Shock)	50 g
Emissions	IEC 61000-6-4

Environmental Specifications - 1756-IB16ISOE, 1756-IB16ISOEK

Attribute	1756-IB16ISOE, 1756-IB16ISOEK
ESD immunity IEC 61000-4-2	6 kV contact discharges 8 kV air discharges
Radiated RF immunity IEC 61000-4-3	10V/m with 1 kHz sine-wave 80% AM from 80…2000 MHz 10V/m with 200 Hz 50% Pulse 100% AM @ 900 MHz 10V/m with 200 Hz 50% Pulse 100% AM @ 1890 MHz 3V/m with 1 kHz sine-wave 80% AM from 2000…2700 MHz
EFT/B immunity IEC 61000-4-4	±4 kV at 5 kHz on signal ports
Surge transient immunity IEC 61000-4-5	±1 kV line-line (DM) and ±2 kV line-earth (CM) on signal ports
Conducted RF immunity IEC 61000-4-6	10V rms with 1 kHz sine-wave 80% AM from 150 kHz…80 MHz
Oscillatory surge withstand IEEE C37.90.1	2.5 kV

Certifications - 1756-IB16ISOE, 1756-IB16ISOEK

Certification (when product is marked)(1)	1756-IB16ISOE, 1756-IB16ISOEK
UL	UL Listed Industrial Control Equipment. See UL File E65584.
CSA	CSA Certified Process Control Equipment. See CSA File LR54689C. CSA Certified Process Control Equipment for Class I, Division 2 Group A,B,C,D Hazardous Locations. See CSA File LR69960C.
CE	European Union 2014/30/EU EMC Directive, compliant with: • EN 61326-1; Meas./Control/Lab., Industrial Requirements • EN 61000-6-2; Industrial Immunity • EN 61000-6-4; Industrial Emissions • EN 61131-2; Programmable Controllers (Clause 8, Zone A & B) European Union 2014/35/EU LVD, compliant with: EN 61131-2; Programmable Controllers (Clause 11)
RCM	Australian Radiocommunications Act, compliant with: EN 61000-6-4; Industrial Emissions
Ex	European Union 2014/34/EU ATEX Directive, compliant with: • EN 60079-15; Potentially Explosive Atmospheres, Protection "n" • EN 60079-0; General Requirements II 3 G Ex nA IIC T4 X Gc
KC	Korean Registration of Broadcasting and Communications Equipment, compliant with: Article 58-2 of Radio Waves Act, Clause 3
EAC	Russian Customs Union TR CU 020/2011 EMC Technical Regulation Russian Customs Union TR CU 004/2011 LV Technical Regulation

(1) See the Product Certification link at rok.auto/certifications for Declarations of Conformity, Certificates, and other certification details.

1756-IB32, 1756-IB32K

ControlLogix DC (10...31.2V) input module

Simplified Schematic

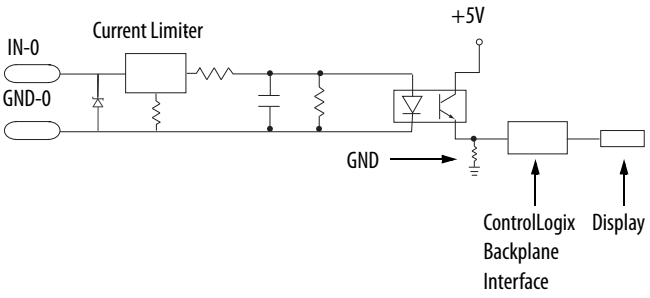

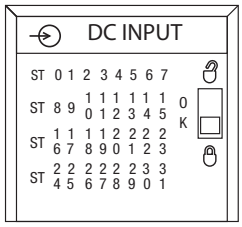

1756-IB32, 1756-IB32K

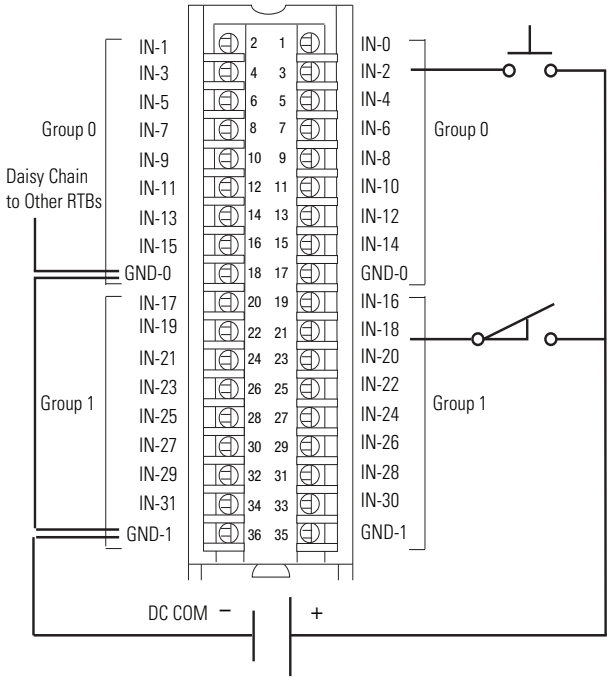

Technical Specifications - 1756-IB32, 1756-IB32K

Attribute	1756-IB32, 1756-IB32K
Inputs	32 (16 points/group)
Voltage category	12/24V DC sink
Operating voltage range	10…31.2V DC
Input voltage, nom	24V DC
Input delay time (screw to backplane) Off to On On to Off	 Hardware delay: 380 µs max + filter time User-selectable filter time: 0 ms, 1 ms, or 2 ms Hardware delay: 420 µs max + filter time User-selectable filter time: 0 ms, 1 ms, 2 ms, 9 ms, or 18 ms
Current draw @ 5.1V	120 mA
Current draw @ 24V	2 mA
Total backplane power	0.66 W
Power dissipation, max	6.2 W @ 60 °C (140 °F)
Thermal dissipation	21.1 BTU/hr @ 60 °C (140 °F)
Off-state voltage, max	5V
Off-state current, max	2.27 mA
On-state current, min	4.8 mA @ 10V DC
On-state current, max	5.5 mA @ 31.2V DC

Technical Specifications - 1756-IB32, 1756-IB32K

Attribute	1756-IB32, 1756-IB32K
Inrush current, max	250 mA (decaying to < 37% in 22 ms, without activation)
Input impedance, max	5.67 kΩ @ 31.2V DC
Cyclic update time	200 µs…750 ms
Change of state	Software configurable
Time stamp of inputs	±200 µs
Isolation voltage	250V (continuous), reinforced insulation type, inputs-to-backplane 250V (continuous), basic insulation type, input group-to-group No isolation between individual group inputs
Module keying	Electronic, software configurable
Removable terminal block	1756-TBCH 1756-TBS6H
RTB keying	User-defined mechanical
Slot width	1
Wire category	1 - on signal ports(1)
Enclosure type	None (open-style)
North American temperature code	T4
IEC temperature code	T4
Reverse polarity protection	Yes

(1) Use this conductor category information for planning conductor routing as described in the system-level installation manual. See the Industrial Automation Wiring and Grounding Guidelines, publication 1770-4.1.

Environmental Specifications - 1756-IB32, 1756-IB32K

Attribute	1756-IB32, 1756-IB32K
Temperature, operating IEC 60068-2-1 (Test Ad, Operating Cold), IEC 60068-2-2 (Test Bd, Operating Dry Heat), IEC 60068-2-14 (Test Nb, Operating Thermal Shock)	0…60 °C (32…140 °F)
Temperature, surrounding air, max	60 °C (140 °F)
Temperature, nonoperating IEC 60068-2-1 (Test Ab, Unpackaged Nonoperating Cold), IEC 60068-2-2 (Test Bb, Unpackaged Nonoperating Dry Heat), IEC 60068-2-14 (Test Na, Unpackaged Nonoperating Thermal Shock)	-40…+85 °C (-40…+185 °F)
Relative humidity IEC 60068-2-30 (Test dB, Unpackaged Damp Heat)	5…95% noncondensing
Vibration IEC 60068-2-6 (Test Fc, Operating)	2 g @ 10…500 Hz
Shock, operating IEC 60068-2-27 (Test Ea, Unpackaged Shock)	30 g
Shock, nonoperating IEC 60068-2-27 (Test Ea, Unpackaged Shock)	50 g
Emissions	IEC 61000-6-4
ESD immunity IEC 61000-4-2	6 kV contact discharges 8 kV air discharges

Environmental Specifications - 1756-IB32, 1756-IB32K

Attribute	1756-IB32, 1756-IB32K
Radiated RF immunity IEC 61000-4-3	10V/m with 1 kHz sine-wave 80% AM from 80…2000 MHz 10V/m with 200 Hz 50% Pulse 100% AM @ 900 MHz 10V/m with 200 Hz 50% Pulse 100% AM @ 1890 MHz 3V/m with 1 kHz sine-wave 80% AM from 2000…2700 MHz
EFT/B immunity IEC 61000-4-4	±4 kV at 5 kHz on signal ports
Surge transient immunity IEC 61000-4-5	±1 kV line-line (DM) and ±2 kV line-earth (CM) on signal ports
Conducted RF immunity IEC 61000-4-6	10V rms with 1 kHz sine-wave 80% AM from 150 kHz…80 MHz
Oscillatory surge withstand IEEE C37.90.1	3 kV

Certifications - 1756-IB32, 1756-IB32K

Certification (when product is marked)(1)	1756-IB32, 1756-IB32K
c-UL-us	UL Listed Industrial Control Equipment, certified for US and Canada. See UL File E65584. UL Listed for Class I, Division 2 Group A,B,C,D Hazardous Locations, certified for U.S. and Canada. See UL File E194810.
CSA	CSA Certified Process Control Equipment. See CSA File LR54689C. CSA Certified Process Control Equipment for Class I, Division 2 Group A,B,C,D Hazardous Locations. See CSA File LR69960C.
CE	European Union 2014/30/EU EMC Directive, compliant with: • EN 61326-1; Meas./Control/Lab., Industrial Requirements • EN 61000-6-2; Industrial Immunity • EN 61000-6-4; Industrial Emissions • EN 61131-2; Programmable Controllers (Clause 8, Zone A & B) European Union 2014/35/EU LVD, compliant with: EN 61131-2; Programmable Controllers (Clause 11)
RCM	Australian Radiocommunications Act, compliant with: EN 61000-6-4; Industrial Emissions
Ex	European Union 2014/34/EU ATEX Directive, compliant with: • EN 60079-15; Potentially Explosive Atmospheres, Protection "n" • EN 60079-0; General Requirements II 3 G Ex nA IIC T4 X Gc
FM	FM Approved Equipment for use in Class I Division 2 Group A,B,C,D Hazardous Locations
KC	Korean Registration of Broadcasting and Communications Equipment, compliant with: Article 58-2 of Radio Waves Act, Clause 3
EAC	Russian Customs Union TR CU 020/2011 EMC Technical Regulation Russian Customs Union TR CU 004/2011 LV Technical Regulation

(1) See the Product Certification link at rok.auto/certifications for Declarations of Conformity, Certificates, and other certification details.

1756-IC16

ControlLogix DC (30...60V) input module

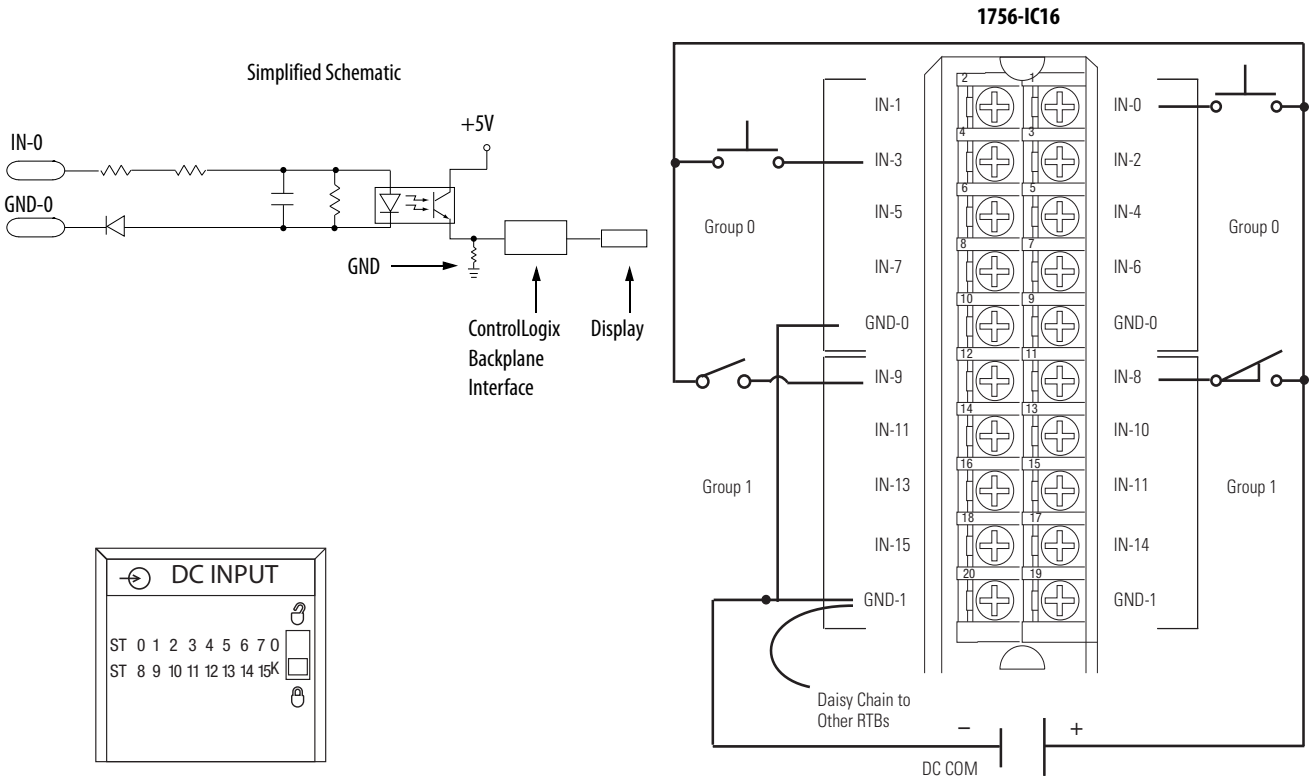

Technical Specifications - 1756-IC16

Attribute	1756-IC16
Inputs	16 (8 points/group)
Voltage category	48V DC sink
Operating voltage range	30…55V DC @ 60 °C (140 °F) 30…60V DC @ 55 °C (131 °F)
Input voltage, nom	48V DC
Input delay time (screw to backplane) Off to On On to Off	 Hardware delay: 1 ms max + filter time User-selectable filter time: 0 ms, 1 ms, or 2 ms Hardware delay: 4 ms max + filter time User-selectable filter time: 0 ms, 1 ms, 2 ms, 9 ms, or 18 ms
Current draw @ 5.1V	100 mA
Current draw @ 24V	3 mA
Total backplane power	0.58 W
Power dissipation, max	5.2 W @ 60 °C (140 °F)
Thermal dissipation	17.73 BTU/hr
Off-state voltage, max	10V
Off-state current, max	1.5 mA
On-state current, min	2 mA @ 30V DC

Technical Specifications - 1756-IC16 (continued)

Attribute	1756-IC16
On-state current, max	7 mA @ 60V DC
Inrush current, max	250 mA
Input impedance, max	8.57 kΩ @ 60V DC
Cyclic update time	200 µs…750 ms
Change of state	Software configurable
Time stamp of inputs	±200 µs
Isolation voltage	250V (continuous), basic insulation type, inputs-to-backplane 125V (continuous), basic insulation type, input group-to-group No isolation between individual group inputs
Module keying	Electronic, software configurable
Removable terminal block housing	1756-TBNH 1756-TBSH
RTB keying	User-defined mechanical
Slot width	1
Wire category	1(1)
Enclosure type	None (open-style)
North American temperature code	T4
IEC temperature code	T4
Reverse polarity protection	Yes

(1) Use this conductor category information for planning conductor routing as described in the system-level installation manual. See the Industrial Automation Wiring and Grounding Guidelines, publication 1770-4.1.

Environmental Specifications - 1756-IC16

Attribute	1756-IC16
Temperature, operating IEC 60068-2-1 (Test Ad, Operating Cold), IEC 60068-2-2 (Test Bd, Operating Dry Heat), IEC 60068-2-14 (Test Nb, Operating Thermal Shock)	0…60 °C (32…140 °F)
Temperature, surrounding air, max	60 °C (140 °F)
Temperature, nonoperating IEC 60068-2-1 (Test Ab, Unpackaged Nonoperating Cold), IEC 60068-2-2 (Test Bb, Unpackaged Nonoperating Dry Heat), IEC 60068-2-14 (Test Na, Unpackaged Nonoperating Thermal Shock)	-40…+85 °C (-40…+185 °F)
Relative humidity IEC 60068-2-30 (Test dB, Unpackaged Damp Heat)	5…95% noncondensing
Vibration IEC 60068-2-6 (Test Fc, Operating)	2 g @ 10…500 Hz
Shock, operating IEC 60068-2-27 (Test Ea, Unpackaged Shock)	30 g
Shock, nonoperating IEC 60068-2-27 (Test Ea, Unpackaged Shock)	50 g
Emissions	IEC 61000-6-4
ESD immunity IEC 61000-4-2	6 kV contact discharges 8 kV air discharges

Environmental Specifications - 1756-IC16 (continued)

Attribute	1756-IC16
Radiated RF immunity IEC 61000-4-3	10V/m with 1 kHz sine-wave 80% AM from 80…2000 MHz 10V/m with 200 Hz 50% Pulse 100% AM @ 900 MHz 10V/m with 200 Hz 50% Pulse 100% AM @ 1890 MHz 3V/m with 1 kHz sine-wave 80% AM from 2000…2700 MHz
EFT/B immunity IEC 61000-4-4	±4 kV at 5 kHz on signal ports
Surge transient immunity IEC 61000-4-5	±1 kV line-line (DM) and ± 2 kV line-earth (CM) on signal ports
Conducted RF immunity IEC 61000-4-6	10V rms with 1 kHz sine-wave 80% AM from 150 kHz…80 MHz
Oscillatory surge withstand IEEE C37.90.1	3 kV

Certifications - 1756-IC16

Certification (when product is marked)(1)	1756-IC16
UL	UL Listed Industrial Control Equipment. See UL File E65584.
CSA	CSA Certified Process Control Equipment. See CSA File LR54689C. CSA Certified Process Control Equipment for Class I, Division 2 Group A,B,C,D Hazardous Locations. See CSA File LR69960C.
CE	European Union 2014/30/EU EMC Directive, compliant with: • EN 61326-1; Meas./Control/Lab., Industrial Requirements • EN 61000-6-2; Industrial Immunity • EN 61000-6-4; Industrial Emissions • EN 61131-2; Programmable Controllers (Clause 8, Zone A & B) European Union 2014/35/EU LVD, compliant with: EN 61131-2; Programmable Controllers (Clause 11)
RCM	Australian Radiocommunications Act, compliant with: EN 61000-6-4; Industrial Emissions
Ex	European Union 2014/34/EU ATEX Directive, compliant with: • EN 60079-15; Potentially Explosive Atmospheres, Protection "n" • EN 60079-0; General Requirements II 3 G Ex nA IIC T4 X Gc
FM	FM Approved Equipment for use in Class I Division 2 Group A,B,C,D Hazardous Locations
KC	Korean Registration of Broadcasting and Communications Equipment, compliant with: Article 58-2 of Radio Waves Act, Clause 3
EAC	Russian Customs Union TR CU 020/2011 EMC Technical Regulation Russian Customs Union TR CU 004/2011 LV Technical Regulation

(1) See the Product Certification link at rok.auto/certifications for Declarations of Conformity, Certificates, and other certification details.

1756-IF4FX0F2F, 1756-IF4FX0F2FK

ControlLogix high-speed input/output analog module

1756-IF4FX0F2F, 1756-IF4FX0F2FK Current

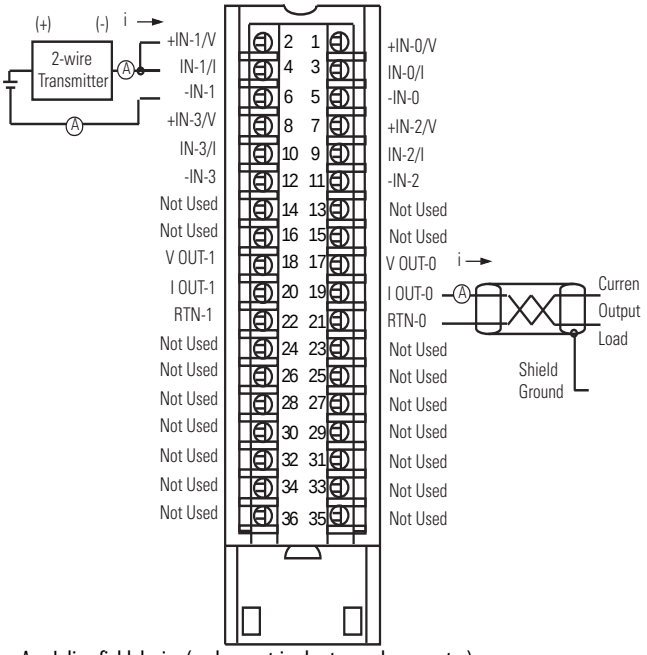

A = Inline field device (such as a strip chart recorder or meter)

1756-IF4FX0F2F, 1756-IF4FX0F2FK Voltage

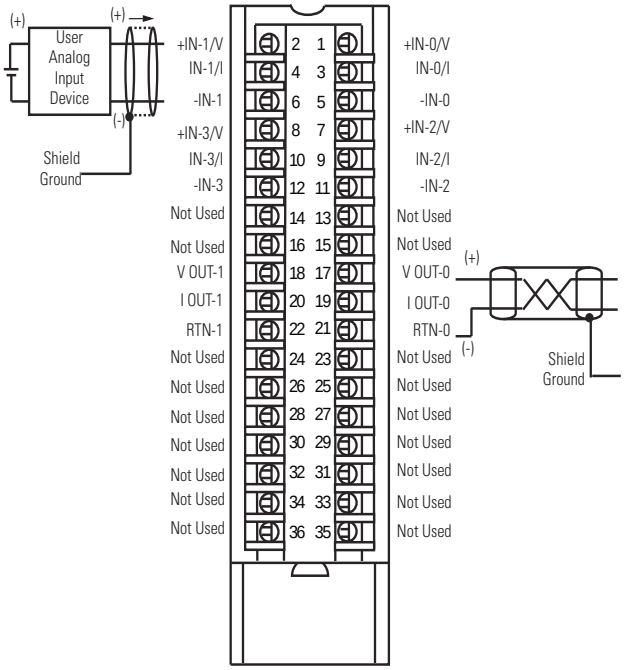

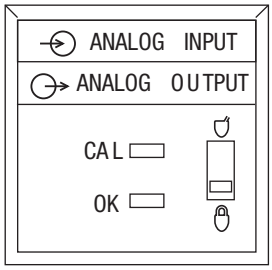

Technical Specifications - 1756-IF4FX0F2F, 1756-IF4FX0F2FK

Attribute	1756-IF4FX0F2F, 1756-IF4FX0F2FK
Current draw at 5.1V	375 mA
Current draw at 24V	100 mA
Voltage and current ratings	Backplane: 375 mA @ 5.1V DC, 100 mA @ 24V DC Analog inputs: -10…+10V, 4…20 mA Analog outputs: -10…+10V, 4…20 mA
Power consumption	4.3 W
Power dissipation	Voltage: 4.3 W Current: 4.7 W
Thermal dissipation	Voltage: 14.66 BTU/hr Current: 16.02 BTU/hr
Data format	Integer mode (left justified, 2 s complement) IEEE 32-bit floating point

Technical Specifications - 1756-IF4FXOF2F, 1756-IF4FXOF2FK

Attribute	1756-IF4FXOF2F, 1756-IF4FXOF2FK
Isolation voltage	250V (continuous) Reinforced insulation type, inputs and outputs to backplane No isolation between individual inputs or outputs
Module keying	Electronic, software configurable
Removable terminal block	1756-TBCH 1756-TBS6H
RTB keying	User-defined mechanical
Slot width	1
Wire size	1756-TBCH Single wire connection: 0.33…2.1 mm2 (22…14 AWG) solid or stranded shielded copper wire rated at 105 °C (221 °F), or greater, 1.2 mm (3/64 in.) insulation max 1756-TBS6H Single wire connection: 0.33…2.1 mm2 (22…14 AWG) solid or stranded shielded copper wire rated at 105 °C (221 °F), or greater, 1.2 mm (3/64 in.) insulation max
Terminal block torque specs	1756-TBCH: 0.5 Nm (4.4 pound-inches)
Wiring category(1)	2 - on signal ports
Enclosure type	None (open-style)
North American temp code	T4A
ATEX temp code	T4
IECEx temperature code	T4

(1) Use this Conductor Category information for planning conductor routing. See the Industrial Automation Wiring and Grounding Guidelines, publication 1770-4.1.

Input Specifications - 1756-IF4FXOF2F, 1756-IF4FXOF2FK

Attribute	1756-IF4FXOF2F, 1756-IF4FXOF2FK
Number	4 high-speed, submillisecond, differential
Input range	± 10V 0…10V 0…5V 0…20 mA (Overrange indication when exceeded)
Resolution	Approx 14 bits across ±10.5V DC (21V total) ±10.5V range: 1.3 mV/bit, 14 bit effective 0…10.5V range: 1.3 mV/bit, 13 bit effective 0…5.25V range: 1.3 mV/bit, 12 bit effective Approx 12 bits across 21 mA 0…21 mA range: 5.25 µA/bit
Repeatability	±1 Least Significant Bit (LSB)(1)
Input impedance	Voltage: >1 MΩ Current: 249 Ω
Open circuit detection	Positive full-scale reading within 1 s
Overvoltage protection	Voltage: 30V DC Current: 8V AC/DC
Calibrated accuracy @ 25 °C (77 °F)	0.05% of range immediately after calibration Better than 0.1% of range within calibration interval
Calibration interval	12 months

Input Specifications - 1756-IF4FXOF2F, 1756-IF4FXOF2FK

Attribute	1756-IF4FXOF2F, 1756-IF4FXOF2FK
Gain drift with temperature	Voltage: 25 ppm/°C max Current: 35 ppm/°C max
Module error	0.2% of range
Module scan time	300 µs min(2)
Input conversion method	Successive approximation

(1) Repeatability is defined as the stability of the input channel reading when a steady state signal is applied, for example, ±1 LSB is one count (1.3 mV) from the nominal reading.

(2) 300 µs min for 1756-IF4FXOF2F/B, firmware revision 3.*x* or greater. 400 µs min for 1756-IF4FXOF2F/A, firmware revision 1.*x*.

Output Specifications - 1756-IF4FXOF2F, 1756-IF4FXOF2FK

Attribute	1756-IF4FXOF2F, 1756-IF4FXOF2FK
Number	Two high-speed voltage or current
Output range	± 10V 0…20 mA
Resolution	13 bits across 21 mA = 2.8 µA/bit 14 bits across 21.8V = 1.3 mV/bit
Open circuit detection	Current output only (Output must be set to >0.1 mA)
Overvoltage protection	24V DC
Short circuit protection	Electronically current limited to 21 mA or less
Drive capability	Voltage: >2000 Ω Current: 0…750 Ω
Output settling time	< 2 ms to 95% of final value with resistive loads
Calibrated accuracy @ 25 °C (77 °F)	0.05% of range immediately after calibration Better than 0.1% of range within calibration interval
Calibration interval	12 months
Offset drift	50 µV/° C 1 µA/° C
Gain drift with temperature	Voltage: 25 ppm/°C max Current: 50 ppm/°C max
Module error	Voltage: 0.2% of range Current: 0.3% of range
Update period for all channels (RPI), min	1 ms
Output conversion method	R-Ladder DAC, monotonicity with no missing codes

Environmental Specifications - 1756-IF4FXOF2F, 1756-IF4FXOF2FK

Attribute	1756-IF4FXOF2F, 1756-IF4FXOF2FK
Temperature, operating IEC 60068-2-1 (Test Ad, Operating Cold), IEC 60068-2-2 (Test Bd, Operating Dry Heat), IEC 60068-2-14 (Test Nb, Operating Thermal Shock)	0 °C < Ta < +60 °C (+32 °F < Ta < +140 °F)
Temperature, surrounding air, max	60 °C (140 °F)
Temperature, nonoperating IEC 60068-2-1 (Test Ab, Unpackaged Nonoperating Cold), IEC 60068-2-2 (Test Bb, Unpackaged Nonoperating Dry Heat), IEC 60068-2-14 (Test Na, Unpackaged Nonoperating Thermal Shock)	-40…+85 °C (-40…+185 °F)
Relative humidity IEC 60068-2-30 (Test dB, Unpackaged Damp Heat)	5…95% noncondensing

Environmental Specifications - 1756-IF4FXOF2F, 1756-IF4FXOF2FK

Attribute	1756-IF4FXOF2F, 1756-IF4FXOF2FK
Vibration IEC 60068-2-6 (Test Fc, Operating)	2 g @ 10…500 Hz
Shock, operating IEC 60068-2-27 (Test Ea, Unpackaged Shock)	30 g
Shock, nonoperating IEC 60068-2-27 (Test Ea, Unpackaged Shock)	50 g
Emissions	IEC 61000-6-4
ESD immunity IEC 61000-4-2	6 kV contact discharges 8 kV air discharges
Radiated RF immunity IEC 61000-4-3	10V/m with 1 kHz sine-wave 80% AM from 80…2000 MHz 10V/m with 200 Hz 50% Pulse 100% AM @ 900 MHz 10V/m with 200 Hz 50% Pulse 100% AM @ 1890 MHz 3V/m with 1 kHz sine-wave 80% AM from 2000…2700 MHz 3V/m with 1 kHz sine-wave 80% AM from 2700…6000 MHz
EFT/B immunity IEC 61000-4-4	±2 kV at 5 kHz and 100 kHz on shielded signal ports
Surge transient immunity IEC 61000-4-5	±2 kV line-earth (CM) on shielded signal ports
Conducted RF immunity IEC 61000-4-6	10V rms with 1 kHz sine-wave 80% AM from 150 kHz…80 MHz

Certifications - 1756-IF4FXOF2F, 1756-IF4FXOF2FK

Certification (when product is marked)(1)	1756-IF4FXOF2F, 1756-IF4FXOF2FK
UL	UL Listed Industrial Control Equipment. See UL File E65584.
CSA	CSA Certified Process Control Equipment for Class I, Division 2 Group A,B,C,D Hazardous Locations. See CSA File LR69960C.
FM	FM Approved Equipment for use in Class I Division 2 Group A,B,C,D Hazardous Locations
CE	European Union 2014/30/EU EMC Directive, compliant with: • EN 61326-1; Meas./Control/Lab., Industrial Requirements • EN 61000-6-2; Industrial Immunity • EN 61000-6-4; Industrial Emissions • EN 61131-2; Programmable Controllers (Clause 8, Zone A & B) European Union 2014/35/EU LVD, compliant with: EN 61131-2; Programmable Controllers (Clause 11)
RCM	Australian Radiocommunications Act, compliant with: EN 61000-6-4; Industrial Emissions
Ex	European Union 2014/34/EU ATEX Directive, compliant with: • EN 60079-0; General Requirements • EN 60079-15; Potentially Explosive Atmospheres, Protection "n" • II 3 G Ex nA IIC T4 Gc • DEMKO15ATEX1482X
IECEx	IECEx System, compliant with: • IEC 60079-0; General Requirements • IEC 60079-15; Potentially Explosive Atmospheres, Protection "n" • II 3 G Ex nA IIC T4 Gc • IECEx UL 15.0053X
KC	Korean Registration of Broadcasting and Communications Equipment, compliant with: Article 58-2 of Radio Waves Act, Clause 3
EAC	Russian Customs Union TR CU 020/2011 EMC Technical Regulation Russian Customs Union TR CU 004/2011 LV Technical Regulation

(1) See the Product Certification link at rok.auto/certifications for Declarations of Conformity, Certificates, and other certification details.

1756-IF6CIS

ControlLogix sourcing current loop analog input module

1756-IF6CIS 2-wire Transmitter Connected to the Module and the Module Providing 24V DC Loop Power

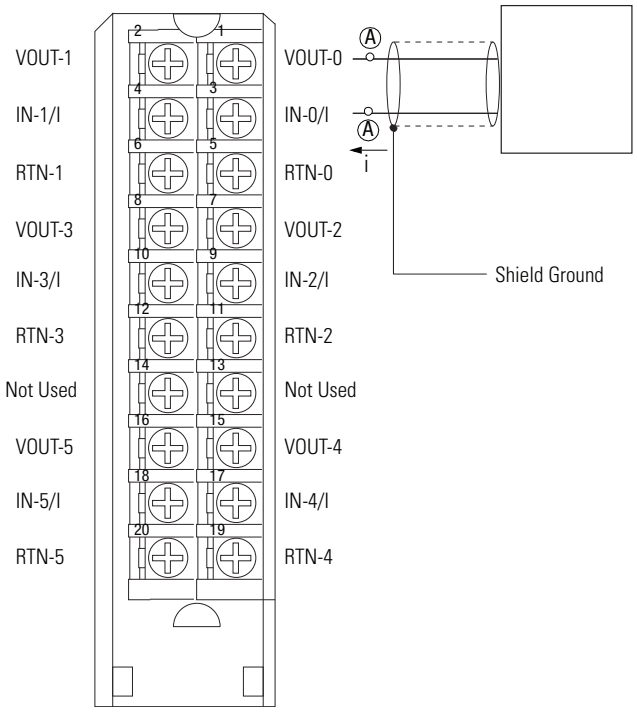

1756-IF6CIS 2-wire Transmitter Connected to the Module and an External, User-provided Power Supply Providing 24V DC Loop Power

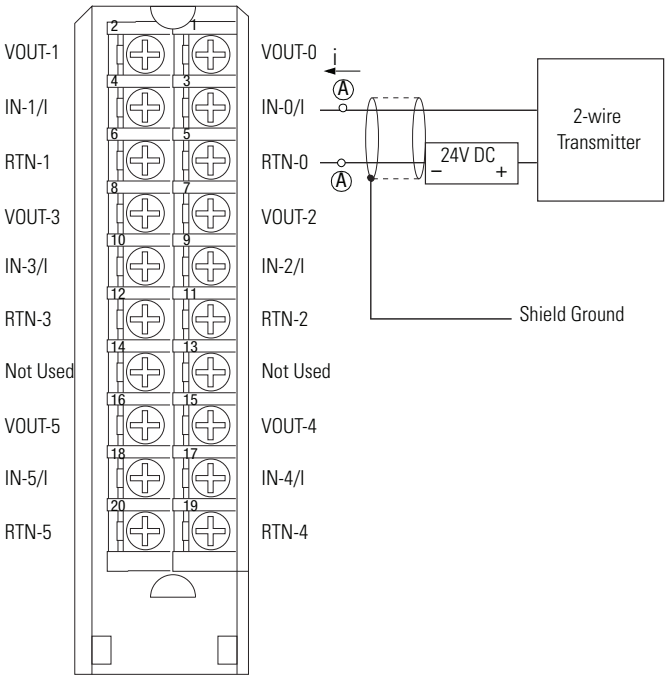

Place additional loop devices (such as strip chart recorders) at either A location in the current loop.

1756-IF6CIS 4-wire Transmitter Connected to the Module and an External, User-provided Power Supply Providing 24V DC Loop Power

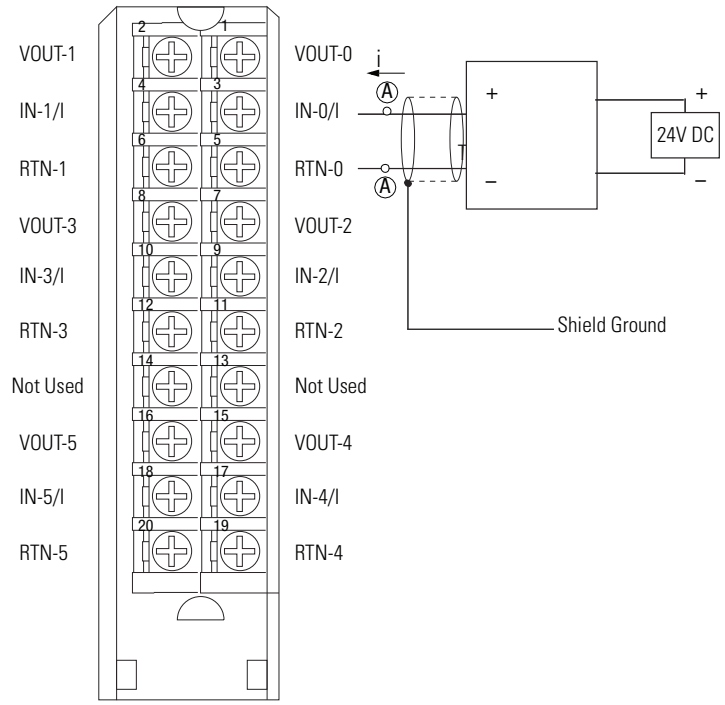

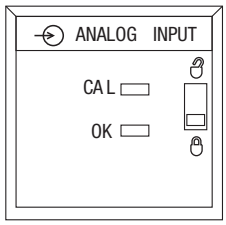

- Place additional loop devices (such as strip chart recorders) at either A location in the current loop.
- User-supplied power supply must not exceed 150VA.

Signal and User Counts - 1756-IF6CIS

Range	Low Signal and User Counts	High Signal and User Counts
0…20 mA	0 mA -32768 counts	21.09376 mA 32767 counts

Technical Specifications - 1756-IF6CIS

Attribute	1756-IF6CIS
Inputs	6 individually isolated current sourcing
Input range	0…20 mA (overrange indication when exceeded)
Resolution	16 bits 0.34 µA/bit
Current draw @ 5.1V	250 mA
Current draw @ 24V	275 mA
Total backplane power	7.9 W
Power dissipation, max	5.1 W @ 60 °C (140 °F)
Thermal dissipation	17.4 BTU/hr
Input impedance	215 Ω, approx
Sourcing voltage, min	20V DC
Sourcing voltage, max	30V DC
Sourcing current, max	Current limited to < 30 mA
Open circuit detection time	Zero reading within 5 s
Overvoltage protection, max	30V AC/DC with PTC and sense resistor
Normal mode noise rejection	60 dB @ 60 Hz(1)
Common mode noise rejection	120 dB @ 60 Hz 100 dB @ 50 Hz
Channel bandwidth	3…262 Hz (-3 dB)(1)
Settling time	<80 ms to 5% of full scale(1)
Calibrated accuracy 25 °C (77 °F), nom	Better than 0.1% of range
Calibrated accuracy 25 °C (77 °F), max	0.025% of range
Calibration interval	12 months
Offset drift	200 nA/°C
Gain drift with temperature, nom	17 ppm/°C 0.36 µA/°C
Gain drift with temperature, max	35 ppm/°C max 0.74 µA/°C max
Module error	0.2% of range
Module input scan time, min	25 ms min – floating point 10 ms min – integer
Onboard data alarming	Yes
Scaling to engineering units	Yes
Real-time channel sampling	Yes
Data format	Integer mode (left justified, 2 s complement) IEEE 32-bit floating point
Module conversion method	Sigma-Delta

Technical Specifications - 1756-IF6CIS (continued)

Attribute	1756-IF6CIS
Isolation voltage	250V (continuous), basic insulation type, input channels-to-backplane, and input channel-to-channel
Module keying	Electronic, software configurable
Removable terminal block	1756-TBNH 1756-TBSH
RTB keying	User-defined mechanical
Slot width	1
Wire category	2(2)
Enclosure type	None (open-style)
North American temperature code	T4A
IEC temperature code	T4

(1) Notch filter dependent.

(2) Use this conductor category information for planning conductor routing as described in the system-level installation manual. See the Industrial Automation Wiring and Grounding Guidelines, publication 1770-4.1.

Environmental Specifications - 1756-IF6CIS

Attribute	1756-IF6CIS
Temperature, operating IEC 60068-2-1 (Test Ad, Operating Cold), IEC 60068-2-2 (Test Bd, Operating Dry Heat), IEC 60068-2-14 (Test Nb, Operating Thermal Shock)	0…60 °C (32…140 °F)
Temperature, surrounding air, max	60 °C (140 °F)
Temperature, nonoperating IEC 60068-2-1 (Test Ab, Unpackaged Nonoperating Cold), IEC 60068-2-2 (Test Bb, Unpackaged Nonoperating Dry Heat), IEC 60068-2-14 (Test Na, Unpackaged Nonoperating Thermal Shock)	-40…+85 °C (-40…+185 °F)
Relative humidity IEC 60068-2-30 (Test dB, Unpackaged Damp Heat)	5…95% noncondensing
Vibration IEC 60068-2-6 (Test Fc, Operating)	2 g @ 10…500 Hz
Shock, operating IEC 60068-2-27 (Test Ea, Unpackaged Shock)	30 g
Shock, nonoperating IEC 60068-2-27 (Test Ea, Unpackaged Shock)	50 g
Emissions	IEC 61000-6-4
ESD immunity IEC 61000-4-2	6 kV contact discharges 8 kV air discharges
Radiated RF immunity IEC 61000-4-3	10V/m with 1 kHz sine-wave 80% AM from 80…2000 MHz 10V/m with 200 Hz 50% Pulse 100% AM @ 900 MHz 10V/m with 200 Hz 50% Pulse 100% AM @ 1890 MHz 3V/m with 1 kHz sine-wave 80% AM from 2000…2700 MHz
EFT/B immunity IEC 61000-4-4	±2 kV at 5 kHz on shielded signal ports
Surge transient immunity IEC 61000-4-5	±2 kV line-earth (CM) on shielded signal ports
Conducted RF immunity IEC 61000-4-6	10V rms with 1 kHz sine-wave 80% AM from 150 kHz…80 MHz on shielded signal ports

Certifications - 1756-IF6CIS

Certification (when product is marked)[1]	1756-IF6CIS
UL	UL Listed Industrial Control Equipment. See UL File E65584.
CSA	CSA Certified Process Control Equipment. See CSA File LR54689C. CSA Certified Process Control Equipment for Class I, Division 2 Group A,B,C,D Hazardous Locations. See CSA File LR69960C.
CE	European Union 2014/30/EU EMC Directive, compliant with: • EN 61326-1; Meas./Control/Lab., Industrial Requirements • EN 61000-6-2; Industrial Immunity • EN 61000-6-4; Industrial Emissions • EN 61131-2; Programmable Controllers (Clause 8, Zone A & B) European Union 2014/35/EU LVD, compliant with: EN 61131-2; Programmable Controllers (Clause 11)
RCM	Australian Radiocommunications Act, compliant with: EN 61000-6-4; Industrial Emissions
Ex	European Union 2014/34/EU ATEX Directive, compliant with: • EN 60079-15; Potentially Explosive Atmospheres, Protection "n" • EN 60079-0; General Requirements II 3 G Ex nA IIC T4 X Gc
FM	FM Approved Equipment for use in Class I Division 2 Group A,B,C,D Hazardous Locations
KC	Korean Registration of Broadcasting and Communications Equipment, compliant with: Article 58-2 of Radio Waves Act, Clause 3
EAC	Russian Customs Union TR CU 020/2011 EMC Technical Regulation Russian Customs Union TR CU 004/2011 LV Technical Regulation

(1) See the Product Certification link at rok.auto/certifications for Declarations of Conformity, Certificates, and other certification details.

1756-IF6I

ControlLogix isolated voltage/current analog input module

1756-IF6I Current 2-wire

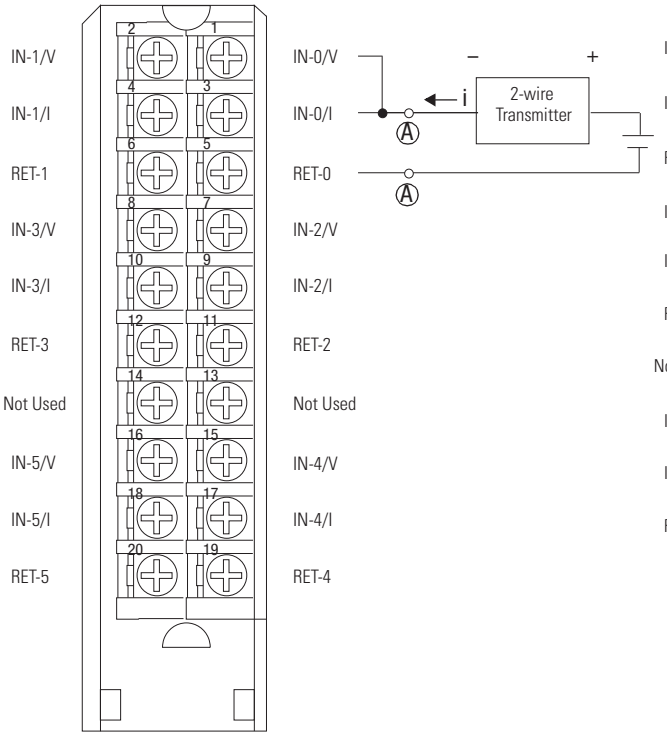

1756-IF6I Current 4-wire

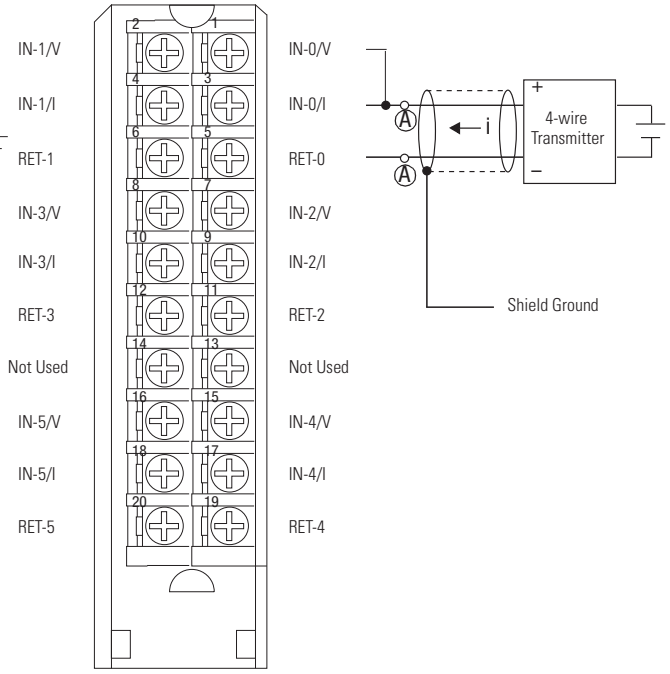

Place additional loop devices (such as strip chart recorders) at either A location.

1756-IF6I Voltage

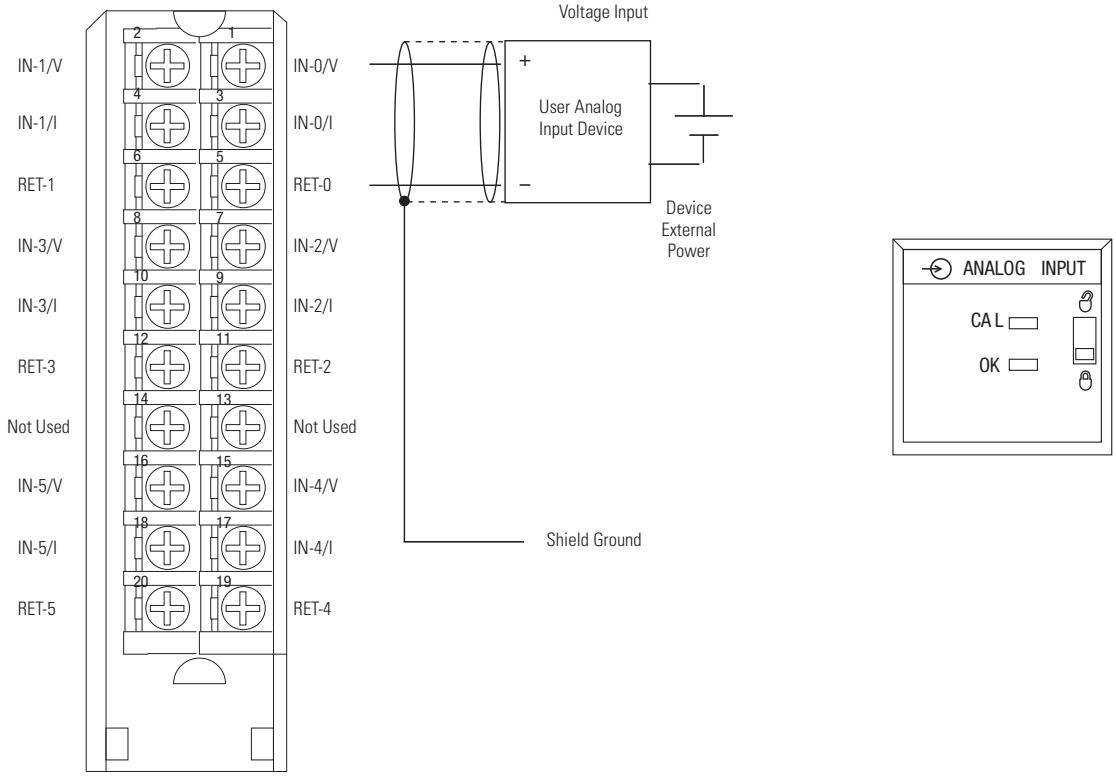

Signal and User Counts - 1756-IF6I

Range	Low Signal and User Counts	High Signal and User Counts
±10V	-10.54688V -32768 counts	10.54688V 32767 counts
0…10V	0V -32768 counts	10.54688V 32767 counts
0…5V	0V -32768 counts	5.27344V 32767 counts
0…20 mA	0 mA -32768 counts	21.09376V 32767 counts

Technical Specifications - 1756-IF6I

Attribute	1756-IF6I
Inputs	6 individually isolated
Input range	±10.5V 0…10.5V 0…5.25V 0…21 mA (Overrange indication when exceeded)
Resolution	16 bits 10.5V: 343 µV/bit 0…10.5V: 171 µV/bit 0…5.25V: 86 µV/bit 0…21 mA: 0.34 µA/bit
Current draw @ 5.1V	250 mA
Current draw @ 24V	100 mA
Total backplane power	3.7 W
Power dissipation, max	Voltage: 3.7 W Current: 4.3 W
Thermal dissipation	Voltage: 12.62 BTU/hr Current: 14.32 BTU/hr
Input impedance	Voltage: > 10 MΩ Current: 249 Ω
Open circuit detection time	Positive full scale reading within 5 s
Overvoltage protection, max	Voltage: 120V AC/DC Current: 8V AC/DC (with onboard current resistor)
Normal mode noise rejection	60 dB @ 60 Hz(1)
Common mode noise rejection	120 dB @ 60 Hz 100 dB @ 50 Hz
Channel bandwidth	15 Hz (-3 dB)(1)
Settling time	<80 ms to 5% of full scale(1)
Calibrated accuracy 25 °C (77 °F)	Better than 0.1% of range
Calibration interval	6 months
Offset drift	2 µV/°C
Gain drift with temperature	Voltage: 35 ppm/°C, 80 ppm/°C max Current: 45 ppm/°C, 90 ppm/°C max
Module error	0.54% of range

Technical Specifications - 1756-IF6I (continued)

Attribute	1756-IF6I
Module input scan time, min	25 ms min – floating point 10 ms min – integer(1)
Onboard data alarming	Yes
Scaling to engineering units	Yes
Real-time channel sampling	Yes
Data format	Integer mode (left justified, 2 s complement) IEEE 32-bit floating point
Module conversion method	Sigma-Delta
Isolation voltage	250V (continuous), basic insulation type, input channels-to-backplane, and input channel-to-channel
Module keying	Electronic, software configurable
Removable terminal block	1756-TBNH 1756-TBSH
RTB keying	User-defined mechanical
Slot width	1
Wire category	2(2)
Enclosure type	None (open-style)
North American temperature code	T4A
IEC temperature code	T4

(1) Notch filter dependent.

(2) Use this conductor category information for planning conductor routing as described in the system-level installation manual. See the Industrial Automation Wiring and Grounding Guidelines, publication 1770-4.1.

Environmental Specifications - 1756-IF6I

Attribute	1756-IF6I
Temperature, operating IEC 60068-2-1 (Test Ad, Operating Cold), IEC 60068-2-2 (Test Bd, Operating Dry Heat), IEC 60068-2-14 (Test Nb, Operating Thermal Shock)	0…60 °C (32…140 °F)
Temperature, surrounding air, max	60 °C (140 °F)
Temperature, nonoperating IEC 60068-2-1 (Test Ab, Unpackaged Nonoperating Cold), IEC 60068-2-2 (Test Bb, Unpackaged Nonoperating Dry Heat), IEC 60068-2-14 (Test Na, Unpackaged Nonoperating Thermal Shock)	-40…+85 °C (-40…+185 °F)
Relative humidity IEC 60068-2-30 (Test dB, Unpackaged Damp Heat)	5…95% noncondensing
Vibration IEC 60068-2-6 (Test Fc, Operating)	2 g @ 10…500 Hz
Shock, operating IEC 60068-2-27 (Test Ea, Unpackaged Shock)	30 g
Shock, nonoperating IEC 60068-2-27 (Test Ea, Unpackaged Shock)	50 g
Emissions	IEC 61000-6-4
ESD immunity IEC 61000-4-2	6 kV contact discharges 8 kV air discharges

Environmental Specifications - 1756-IF6I (continued)

Attribute	1756-IF6I
Radiated RF immunity IEC 61000-4-3	10V/m with 1 kHz sine-wave 80% AM from 80…2000 MHz 10V/m with 200 Hz 50% Pulse 100% AM @ 900 MHz 10V/m with 200 Hz 50% Pulse 100% AM @ 1890 MHz 3V/m with 1 kHz sine-wave 80% AM from 2000…2700 MHz
EFT/B immunity IEC 61000-4-4	±2 kV at 5 kHz on shielded signal ports
Surge transient immunity IEC 61000-4-5	±2 kV line-earth (CM) on shielded signal ports
Conducted RF immunity IEC 61000-4-6	10V rms with 1 kHz sine-wave 80% AM from 150 kHz…80 MHz on shielded signal ports

Certifications - 1756-IF6I

Certification (when product is marked)[1]	1756-IF6I
UL	UL Listed Industrial Control Equipment. See UL File E65584.
CSA	CSA Certified Process Control Equipment. See CSA File LR54689C. CSA Certified Process Control Equipment for Class I, Division 2 Group A,B,C,D Hazardous Locations. See CSA File LR69960C.
CE	European Union 2014/30/EU EMC Directive, compliant with: • EN 61326-1; Meas./Control/Lab., Industrial Requirements • EN 61000-6-2; Industrial Immunity • EN 61000-6-4; Industrial Emissions • EN 61131-2; Programmable Controllers (Clause 8, Zone A & B) European Union 2014/35/EU LVD, compliant with: EN 61131-2; Programmable Controllers (Clause 11)
RCM	Australian Radiocommunications Act, compliant with: EN 61000-6-4; Industrial Emissions
Ex	European Union 2014/34/EU ATEX Directive, compliant with: • EN 60079-15; Potentially Explosive Atmospheres, Protection "n" • EN 60079-0; General Requirements II 3 G Ex nA IIC T4 X Gc
FM	FM Approved Equipment for use in Class I Division 2 Group A,B,C,D Hazardous Locations
KC	Korean Registration of Broadcasting and Communications Equipment, compliant with: Article 58-2 of Radio Waves Act, Clause 3
EAC	Russian Customs Union TR CU 020/2011 EMC Technical Regulation Russian Customs Union TR CU 004/2011 LV Technical Regulation

(1) See the Product Certification link at rok.auto/certifications for Declarations of Conformity, Certificates, and other certification details.

1756-IF8, 1756-IF8K

ControlLogix voltage/current analog input module

1756-IF8, 1756-IF8K Differential Current

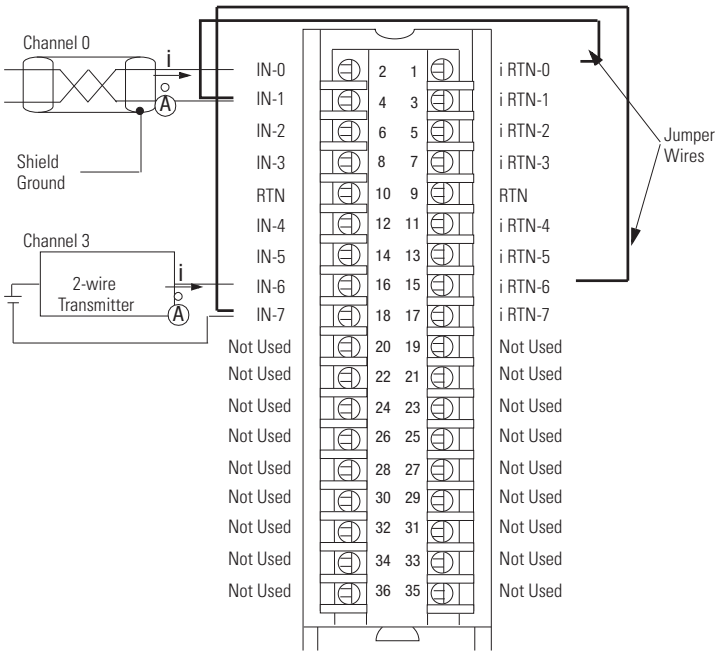

1756-IF8, 1756-IF8K Differential Voltage

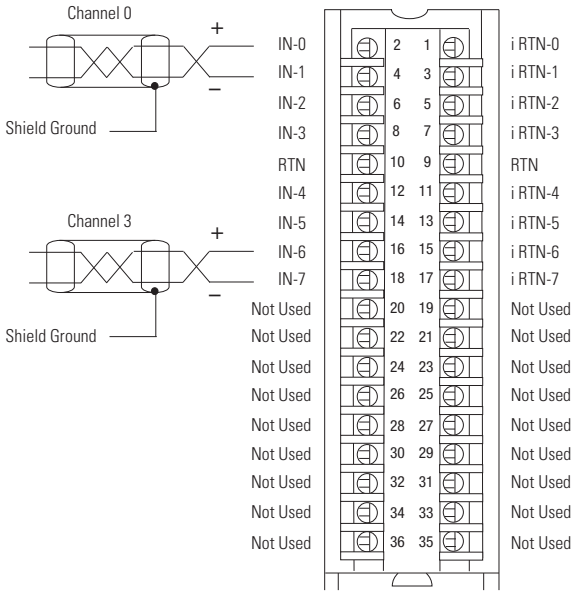

- Use this table when wiring your module in Differential mode.

This channel	Uses these terminals
Channel 0	IN-0 (+), IN-1 (-), i RTN-0
Channel 1	IN-2 (+), IN-3 (-), i RTN-2
Channel 2	IN-4 (+), IN-5 (-), i RTN-4
Channel 3	IN-6 (+), IN-7 (-), i RTN-6

- All terminals marked RTN are connected internally.
- A 249 Ω current loop resistor is located between IN-*x* and i RTN-*x* terminals.
- If multiple (+) or multiple (-) terminals are tied together, connect that tie point to an RTN terminal to maintain the module accuracy.
- Place additional loop devices (such as strip chart recorders) at the A location in the current loop.

IMPORTANT: When operating in 2-channel, High-Speed mode, only use channels 0 and 2.

- Use this table when wiring your module in Differential mode.

This channel	Uses these terminals
Channel 0	IN-0 (+), IN-1 (-)
Channel 1	IN-2 (+), IN-3 (-)
Channel 2	IN-4 (+), IN-5 (-)
Channel 3	IN-6 (+), IN-7 (-)

- All terminals marked RTN are connected internally.
- If multiple (+) or multiple (-) terminals are tied together, connect that tie point to an RTN terminal to maintain the module accuracy.
- Terminals marked RTN or i RTN are not used for differential voltage wiring.

IMPORTANT: When operating in 2-channel, High-Speed mode, only use channels 0 and 2.

1756-IF8, 1756-IF8K Single-ended Current

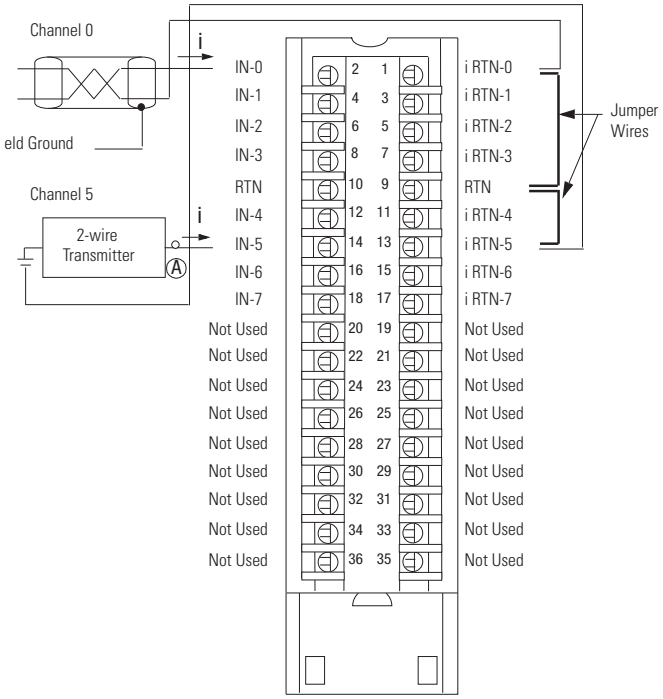

- All terminals marked RTN are connected internally.
- For current applications, all terminals marked iRTN must be wired to terminals marked RTN.
- A 249 Ω current loop resistor is located between IN-*x* and i RTN-*x* terminals.
- Place additional loop devices (such as strip chart recorders) at the A location in the current loop.

1756-IF8, 1756-IF8K Single-ended Voltage

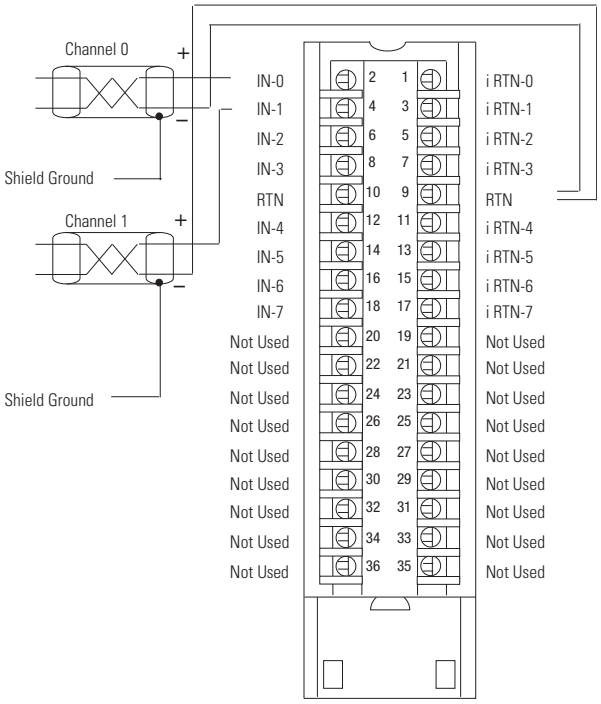

- All terminals marked RTN are connected internally.
- Terminals marked i RTN are not used for single-ended voltage wiring.

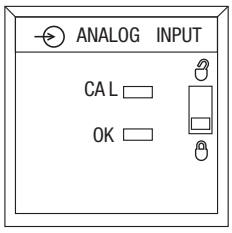

Technical Specifications - 1756-IF8, 1756-IF8K

Attribute	1756-IF8, 1756-IF8K
Inputs	Eight single-ended Four differential Two high-speed differential
Input range	±10V 0…10V 0…5V 0…20 mA
Resolution	±10.25V: 320 μV/count (15 bits plus sign bipolar) 0…10.25V: 160 μV/count (16 bits) 0…5.125V: 80 μ/V count (16 bits) 0…20.5mA: 0.32 μA/count (16 bits)
Current draw @ 5.1V	150 mA
Current draw @ 24V	40 mA
Total backplane power	1.73 W
Voltage and current ratings	Backplane: 5.1V DC, 150 mA max, 24V DC, 40 mA max Input voltage range: -10…+10V Input current range: 4…20mA Limited to 100VA
Power consumption	1.73 W
Power dissipation	Voltage: 1.73 W Current 2.33 W
Thermal dissipation	Voltage: 5.88 BTU/hr Current: 7.92 BTU/hr
Input impedance	Voltage: >1 MΩ Current: 249 Ω
Open circuit detection time	Differential voltage: Positive full scale reading within 5 s Single-ended/diff. current: Negative full scale reading within 5 s Single-ended voltage: Even-numbered channels go to positive full scale reading within 5 s, odd-numbered channels go to negative full scale reading within 5 s
Overvoltage protection, max	Voltage: 30V DC Current: 8V DC
Normal mode noise rejection	>80 dB @ 50/60 Hz[(2)]
Common mode noise rejection	>100 dB @ 50/60 Hz
Calibrated accuracy 25 °C (77 °F)	Voltage: Better than 0.05% of range Current: Better than 0.15% of range
Calibration interval	12 months
Offset drift	45 μV/°C
Gain drift with temperature	Voltage: 15 ppm/°C Current: 20 ppm/°C
Module error	Voltage: 0.1% of range Current: 0.3% of range
Module input scan time, min	8 pt single-ended (floating point): 16…488 ms 4 pt differential (floating point): 8…244 ms 2 pt differential (floating point): 5…122 m[(1)]
Onboard data alarming	Yes
Scaling to engineering units	Yes
Real-time channel sampling	Yes

Technical Specifications - 1756-IF8, 1756-IF8K (continued)

Attribute	1756-IF8, 1756-IF8K
Data format	Integer mode (left justified, 2 s complement) IEEE 32-bit floating point
Module conversion method	Sigma-Delta
Isolation voltage	250V (continuous), Reinforced insulation type, Inputs to Backplane. No isolation between individual Inputs.
Module keying	Electronic, software configurable
Removable terminal block	1756-TBCH 1756-TBS6H
RTB keying	User-defined mechanical
Slot width	1
Wire size	1756-TBCH Single wire connection: 0.33…2.1 mm2(22…14 AWG) solid or stranded shielded copper wire, rated at 105 °C (221 °F) or greater, 1.2 mm (3/64 in.) insulation max 1756-TBS6H Single wire connection: 0.33…2.1 mm2(22…14 AWG) solid or stranded shielded copper wire, rated at |105 °C (221 °F) or greater, 1.2 mm (3/64 in.) insulation max
Terminal block torque specs	1756-TBCH: 0.5 N•m (4.4 lb•in)
Wiring category(1)	2 - on signal ports
Enclosure type	None (open-style)
North American temp code	T4A
ATEX temp code	T4
IECEx temp code	T4

(1) Use this Conductor Category information for planning conductor routing. See the Industrial Automation Wiring and Grounding Guidelines, publication 1770-4.1.
(2) Notch filter dependent.

Environmental Specifications - 1756-IF8, 1756-IF8K

Attribute	1756-IF8, 1756-IF8K
Temperature, operating IEC 60068-2-1 (Test Ad, Operating Cold), IEC 60068-2-2 (Test Bd, Operating Dry Heat), IEC 60068-2-14 (Test Nb, Operating Thermal Shock)	0 °C < Ta < +60 °C (+32 °F < Ta < +140 °F)
Temperature, surrounding air, max	60 °C (140 °F)
Temperature, nonoperating IEC 60068-2-1 (Test Ab, Unpackaged Nonoperating Cold), IEC 60068-2-2 (Test Bb, Unpackaged Nonoperating Dry Heat), IEC 60068-2-14 (Test N/A, Unpackaged Nonoperating Thermal Shock)	-40…+85 °C (-40…+185 °F)
Relative humidity IEC 60068-2-30 (Test dB, Unpackaged Damp Heat)	5…95% noncondensing
Vibration IEC 60068-2-6 (Test Fc, Operating)	2 g @ 10…500 Hz
Shock, operating IEC 60068-2-27 (Test Ea, Unpackaged Shock)	30 g
Shock, nonoperating IEC 60068-2-27 (Test Ea, Unpackaged Shock)	50 g
Emissions	IEC 61000-6-4
ESD immunity IEC 61000-4-2	6 kV contact discharges 8 kV air discharges

Environmental Specifications - 1756-IF8, 1756-IF8K (continued)

Attribute	1756-IF8, 1756-IF8K
Radiated RF immunity IEC 61000-4-3	10V/m with 1 kHz sine-wave 80% AM from 80…2000 MHz 10V/m with 200 Hz 50% Pulse 100% AM @ 900 MHz 10V/m with 200 Hz 50% Pulse 100% AM @ 1890 MHz 3V/m with 1 kHz sine-wave 80% AM from 2000…2700 MHz
EFT/B immunity IEC 61000-4-4	±2 kV at 5 kHz on signal ports
Surge transient immunity IEC 61000-4-5	±2 kV line-earth (CM) on shielded ports
Conducted RF immunity IEC 61000-4-6	10V rms with 1 kHz sine-wave 80% AM from 150 kHz…80 MHz

Certifications - 1756-IF8, 1756-IF8K

Certification (when product is marked)(1)	1756-IF8, 1756-IF8K
UL	UL Listed Industrial Control Equipment. See UL File E65584.
CSA	CSA Certified Process Control Equipment. See CSA File LR54689C. CSA Certified Process Control Equipment for Class I, Division 2 Group A,B,C,D Hazardous Locations. See CSA File LR69960C.
FM	FM Approved Equipment for use in Class I Division 2 Group A,B,C,D Hazardous Locations
CE	European Union 2014/30/EU EMC Directive, compliant with: • EN 61326-1; Meas./Control/Lab., Industrial Requirements • EN 61000-6-2; Industrial Immunity • EN 61000-6-4; Industrial Emissions • EN 61131-2; Programmable Controllers (Clause 8, Zone A & B) European Union 2014/35/EU LVD, compliant with: EN 61131-2; Programmable Controllers (Clause 11)
RCM	Australian Radiocommunications Act, compliant with: EN 61000-6-4; Industrial Emissions
Ex	European Union 2014/34/EU ATEX Directive, compliant with: • EN 60079-0; General Requirements • EN 60079-15; Potentially Explosive Atmospheres, Protection "n" • II 3 G Ex nA IIC T4 Gc • DEMKO15ATEX1482X
IECEx	IECEx System, compliant with: • IEC 60079-0; General Requirements • IEC 60079-15; Potentially Explosive Atmospheres, Protection "n" • II 3 G Ex nA IIC T4 Gc • IECEx UL 15.0053X
KC	Korean Registration of Broadcasting and Communications Equipment, compliant with: Article 58-2 of Radio Waves Act, Clause 3
EAC	Russian Customs Union TR CU 020/2011 EMC Technical Regulation Russian Customs Union TR CU 004/2011 LV Technical Regulation

(1) See the Product Certification link at rok.auto/certifications for Declarations of Conformity, Certificates, and other certification details.

1756-IF8H, 1756-IF8HK

ControlLogix voltage/current analog input module with HART protocol

1756-IF8H, 1756-IF8HK Current

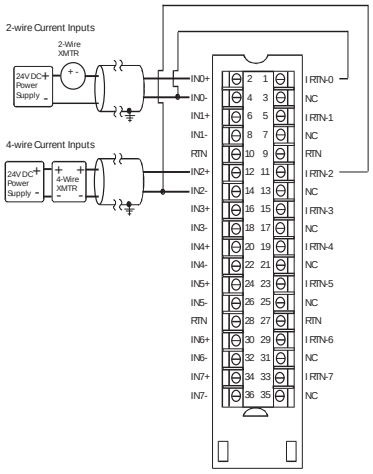

1756-IF8H, 1756-IF8HK Voltage

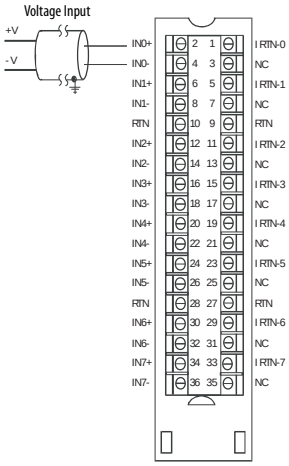

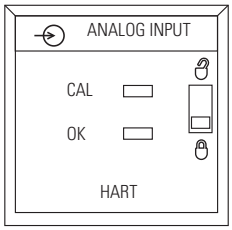

Technical Specifications - 1756-IF8H, 1756-IF8HK

Attribute	1756-IF8H,1756-IF8HK
Inputs	Eight differential voltage or current inputs, one HART modem per module
Input range	±10V 0…5V 1…5V 0…10V 0…20 mA 4…20 mA
Resolution	16…21 bits
Voltage and current ratings	Backplane: 5.1V DC, 300 mA, 24V DC, 135 mA Input voltage range: -10…+10V Input current range: 0…20 mA, 4…20mA
Total backplane power	4.77 W
Power dissipation	Voltage: 3.21 W Current: 4.01 W
Thermal dissipation	Voltage: 11.0 BTU/hr Current: 13.7 BTU/hr
Input impedance	–
Open circuit detection time	Positive full scale reading within 5 s
Overvoltage protection, max	Voltage: 30V DC Current: 8V DC
Normal mode noise rejection	> 80 dB @ 50/60 Hz
Common mode noise rejection	> 100 dB @ 50/60 Hz
Calibrated accuracy	Voltage: Better than 0.05% of range Current: Better than 0.15% of range
Calibration interval	12 months
Offset drift	90 µV/°C
Gain drift with temperature	Voltage: 10 ppm/°C Current: 20 ppm/°C

Technical Specifications - 1756-IF8H, 1756-IF8HK

Attribute	1756-IF8H,1756-IF8HK
Module error	Voltage: 0.1% of range Current: 0.3% of range
Module HART scan time	Analog: 18...488 ms (filter dependent). HART: typically 1 s per HART channel enabled. Estimate 10 s if all 8 channels have HART enabled. Typically 1 s per HART channel enabled. Estimate 10 s if all 8 channels have HART enabled. Pass through messages, handheld communicators, secondary masters, communication errors, or configuration changes can significantly increase the update time
Data format	Integer mode (left justified, 2 s complement) IEEE 32-bit floating point
Input conversion method	Successive approximation
Output conversion method	R-Ladder DAC, monotonicity with no missing codes
Isolation voltage	50V (continuous), Basic insulation type, input channels to backplane No isolation between individual input channels
Module keying	Electronic, software configurable
Removable terminal block	1756-TBCH 1756-TBS6H
RTB keying	User-defined mechanical
Slot width	1
Wire size	1756-TBCH Single wire connection: 0.33…2.1 mm2(22…14 AWG) solid or stranded shielded copper wire, rated at 105 °C (221 °F, or greater, 1.2 mm (3/64 in.) insulation max 1756-TBS6H Single wire connection: 0.33…2.1 mm2(22…14 AWG) solid or stranded shielded copper wire, rated at 105 °C (221 °F) or greater, 1.2 mm (3/64 in.) insulation max
Terminal block torque specs	1756-TBCH 0.5 N•m (4.4 lb•in)
Wire category(1)	2 - on signal ports
Wire type	Copper
Enclosure type rating	None (open-style)
North American temp code	T5
ATEX temp code	T4
IECEx temp code	T4

(1) Use this conductor category information for planning conductor routing as described in the system-level installation manual. See the Industrial Automation Wiring and Grounding Guidelines, publication 1770-4.1.

Environmental Specifications - 1756-IF8H. 1756-IF8HK

Attribute	1756-IF8H, 1756-IF8HK
Temperature, operating IEC 60068-2-1 (Test Ad, Operating Cold), IEC 60068-2-2 (Test Bd, Operating Dry Heat), IEC 60068-2-14 (Test Nb, Operating Thermal Shock)	0 °C < Ta < +60 °C (+32 °F < Ta < +140 °F)
Temperature, surrounding air, max	60 °C (140 °F)
Temperature, nonoperating IEC 60068-2-1 (Test Ab, Unpackaged Nonoperating Cold), IEC 60068-2-2 (Test Bb, Unpackaged Nonoperating Dry Heat), IEC 60068-2-14 (Test N/A, Unpackaged Nonoperating Thermal Shock)	-40…+85 °C (-40…+185 °F)
Relative humidity IEC 60068-2-30 (Test dB, Unpackaged Damp Heat)	5…95% noncondensing

Environmental Specifications - 1756-IF8H. 1756-IF8HK

Attribute	1756-IF8H, 1756-IF8HK
Vibration IEC 60068-2-6 (Test Fc, Operating)	2 g @ 10…500 Hz
Shock, operating IEC 60068-2-27 (Test Ea, Unpackaged Shock)	30 g
Shock, nonoperating IEC 60068-2-27 (Test Ea, Unpackaged Shock)	50 g
Emissions	IEC 61000-6-4
ESD immunity IEC 61000-4-2	6 kV contact discharges 8 kV air discharges
Radiated RF immunity IEC 61000-4-3	10V/m with 1 kHz sine-wave 80% AM from 80…2000 MHz 10V/m with 200 Hz 50% Pulse 100% AM @ 900 MHz 10V/m with 200 Hz 50% Pulse 100% AM @ 1890 MHz 1V/m with 1 kHz sine-wave 80% AM from 2000…2700 MHz
EFT/B immunity IEC 61000-4-4	±2 kV at 5 kHz on signal ports
Surge transient immunity IEC 61000-4-5	±2 kV line-earth (CM) on shielded ports
Conducted RF immunity IEC 61000-4-6	10V rms with 1 kHz sine-wave 80% AM from 150 kHz…80 MHz

Certifications - 1756-IF8H, 1756-IF8HK

Certification (when product is marked)[1]	1756-IF8H, 1756-IF8HK
c-UL-us	UL Listed Industrial Control Equipment, certified for US and Canada. See UL File E65584. UL Listed for Class I, Division 2 Group A,B,C,D Hazardous Locations, certified for U.S. and Canada. See UL File E194810.
CE	European Union 2014/30/EU EMC Directive, compliant with: • EN 61326-1; Meas./Control/Lab., Industrial Requirements • EN 61000-6-2; Industrial Immunity • EN 61000-6-4; Industrial Emissions • EN 61131-2; Programmable Controllers (Clause 8, Zone A & B)
RCM	Australian Radiocommunications Act, compliant with: EN 61000-6-4: Industrial Emissions
Ex	European Union 2014/34/EU ATEX Directive, compliant with: • EN 60079-0; General Requirements • EN 60079-15; Potentially Explosive Atmospheres, Protection "n" • II 3 G Ex nA IIC T4 Gc • DEMKO12ATEX1219040X
IECEx	IECEx System, compliant with: • IEC 60079-0; General Requirements • IEC 60079-15; Potentially Explosive Atmospheres, Protection "n" • II 3 G Ex nA IIC T4 Gc • IECEx UL 16.0109X
KC	Korean Registration of Broadcasting and Communications Equipment, compliant with: Article 58-2 of Radio Waves Act, Clause 3
EAC	Russian Customs Union TR CU 020/2011 EMC Technical Regulation Russian Customs Union TR CU 004/2011 LV Technical Regulation

(1) See the Product Certification link at rok.auto/certifications for Declarations of Conformity, Certificates, and other certification details.

1756-IF8I, 1756-IF8IK

ControlLogix isolated voltage/current analog input module.

1756-IF8I, 1756-IF8IK Module Wiring Diagram -Current Mode with External Loop Power

IMPORTANT: Remember the following:
- In this wiring diagram, an external, user-provided power supply provides 24V DC loop power.
- If separate power sources are used, do not exceed the specific isolation voltage as listed in the specifications.
- Place additional loop devices, for example, strip chart recorders, at either 'A' location in the current loop.

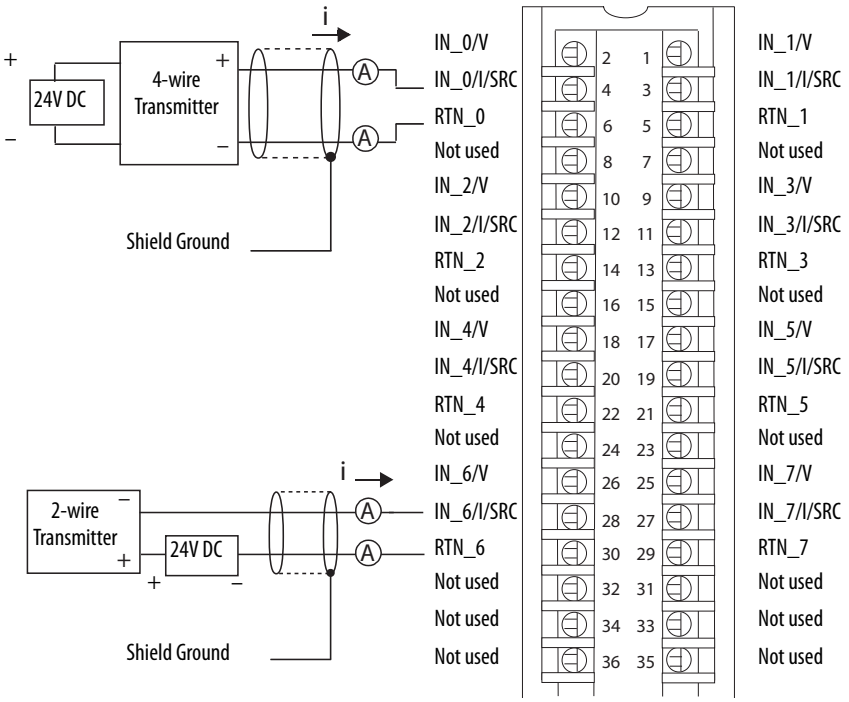

1756-IF8I, 1756-IF8IK Module Wiring Diagram -Current Mode with Internal Loop Power

IMPORTANT: Remember the following:
- In this wiring diagram, the module provides 24V DC loop power.
- If separate power sources are used, do not exceed the specific isolation voltage as listed in the specifications.
- Place additional loop devices, for example, strip chart recorders, at either 'A' location in the current loop.

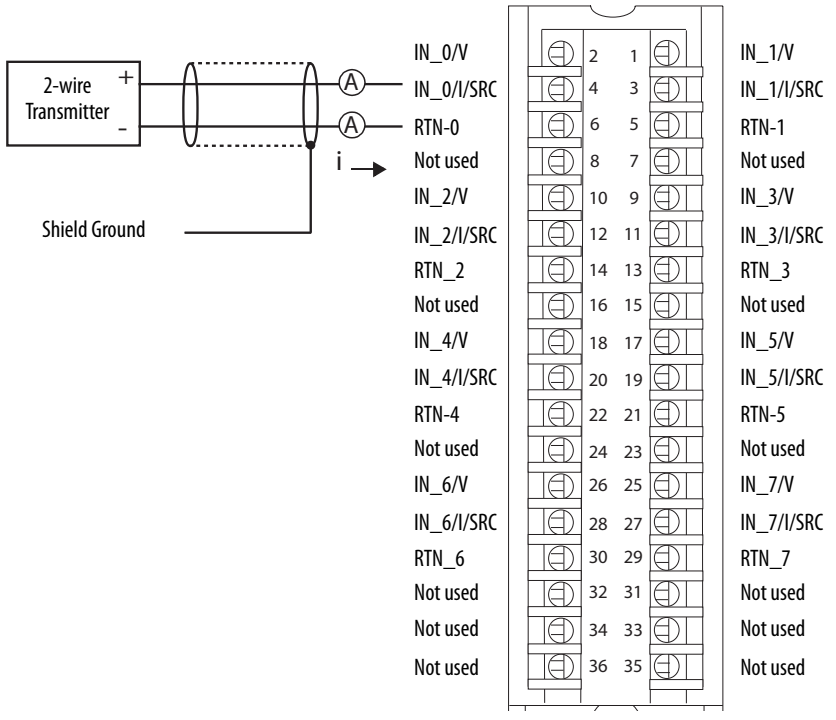

1756-IF8I, 1756-IF8IK Module Wiring Diagram - Voltage Mode

IMPORTANT: If separate power sources are used, do not exceed the specific isolation voltage as listed in the specifications.

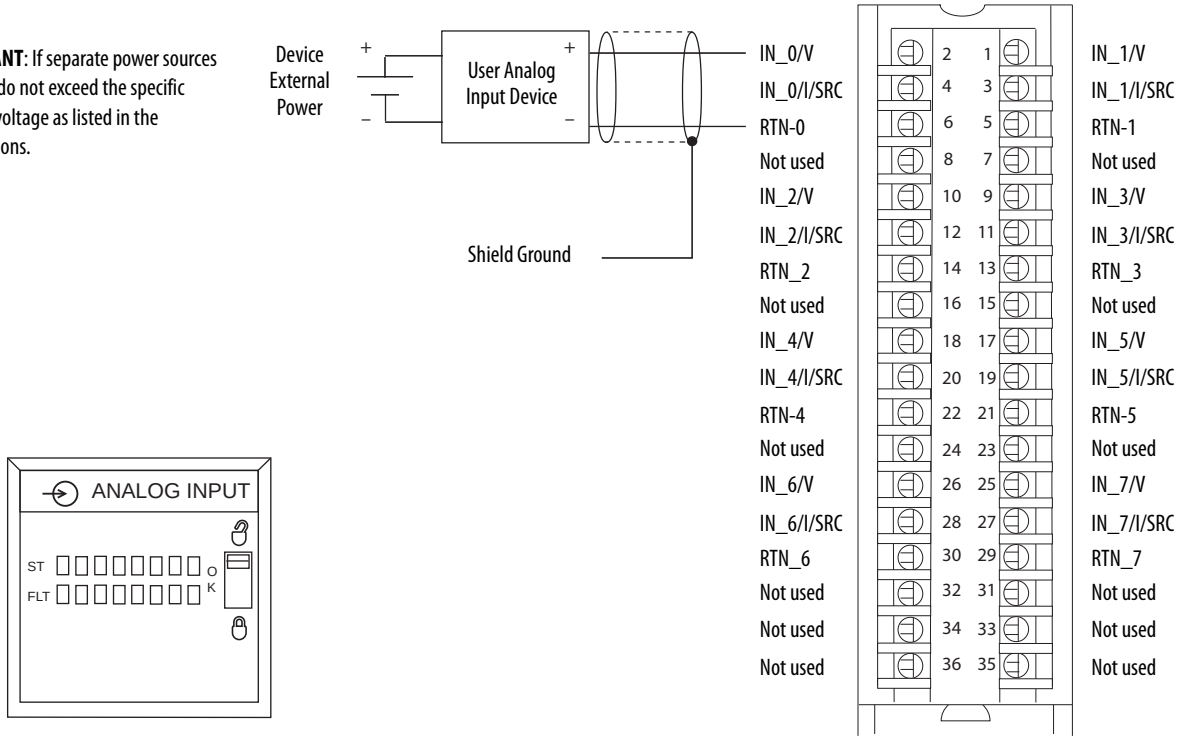

Technical Specifications - 1756-IF8I, 1756-IF8IK

Attribute	1756-IF8I, 1756-IF8IK
Inputs	Eight isolated channels - Any combination of Voltage or Current mode
Voltage and current ratings	Backplane: 5.1V DC 200 mA, 24V DC 400 mA Input Voltage: -10V to +10V, 0V to 10V, 0V to 5V Input Current: 0 mA to 20 mA Output Current: 0 mA to 20 mA
Input ranges	-10…10V 0…10V 0…5V 0…20 mA
Resolution	24-bit ±10.5V (1.49 µV/count) 0…10.5V (1.49 µV/count) 0…5.25V (1.49 µV/count) 0…21 mA (2.99 nA/count)
Current draw @ 5.1V	200 mA
Current draw @ 24V	Voltage/Non-sourcing Current mode: 150 mA Sourcing Current mode: 400 mA (In Sourcing Current mode, the channel provides loop power.)
Total backplane power	Voltage/Non-sourcing Current mode: 4.6 W Sourcing Current mode: 10.6 W
Power dissipation	Voltage mode: 4.6 W (15.7 BTU/hr) Non-sourcing Current mode: 5.1 W (17.4 BTU/hr) Sourcing Current mode: 7.3 W (24.9 BTU/hr)

Technical Specifications - 1756-IF8I, 1756-IF8IK

Attribute	1756-IF8I, 1756-IF8IK
Thermal dissipation	Voltage mode: 15.7 BTU/hr Non-sourcing Current mode: 17.4 BTU/hr Sourcing Current mode: 24.9 BTU/hr
Input impedance, approx	Voltage mode: 1 GΩ (powered); 7500 Ω (unpowered) Current mode: 125 Ω
Sourcing voltage, min	20V DC
Sourcing voltage, max	36V DC (open circuit)
Sourcing current, max	Current Limited < 45 mA (IN_x/I/SRC to RTN_x)
Open circuit detection time	5 s
Overvoltage protection, max	±30V DC
Normal mode noise rejection	80 dB @ 60 Hz(1)
Common mode noise rejection	120 dB @ 50/60 Hz
Channel bandwidth	Notch filter configuration dependent See publication 1756-UM540 for possible values.
Settling time	Notch filter configuration dependent See publication 1756-UM540 for possible values.
Calibrated accuracy 25 °C (77 °F)	0.05%
Module error over full temperature range	0.1%
Module input scan time, min	1 ms
Onboard data alarming	Yes
Scaling to engineering units	Yes
Real-time channel sampling	Yes - Rate set by Requested Packet Interval rate
Data format	IEEE 32-bit floating point
Module conversion method	Sigma-Delta
Isolation voltage	250V (continuous), reinforced insulation type, inputs to backplane 250V (continuous), basic insulation type, input to input
Module keying	Electronic, software configurable
Removable terminal block	1756-TBCH 1756-TBS6H
RTB keying	User-defined mechanical
Slot width	1
Wire size	0.33... 2.1 mm^2 (22...14 AWG) solid or stranded shielded copper wire rated at 90 °C (194 °F), or greater, 1.2 mm (3/64 in.) insulation max
Wire category	2 on signal ports(2)
Enclosure type	None (open-style)
North American temperature code	T4
IEC temperature code	T4

(1) Notch filter dependent.

(2) Use this conductor category information for planning conductor routing as described in the system-level installation manual. See the Industrial Automation Wiring and Grounding Guidelines, publication 1770-4.1.

Environmental Specifications - 1756-IF8I, 1756-IF8IK

Attribute	1756-IF8I, 1756-IF8IK
Temperature, operating IEC 60068-2-1 (Test Ad, Operating Cold), IEC 60068-2-2 (Test Bd, Operating Dry Heat), IEC 60068-2-14 (Test Nb, Operating Thermal Shock)	0…60 °C (32…140 °F)
Temperature, surrounding air, max	60 °C (140 °F)
Temperature, nonoperating IEC 60068-2-1 (Test Ab, Unpackaged Nonoperating Cold), IEC 60068-2-2 (Test Bb, Unpackaged Nonoperating Dry Heat), IEC 60068-2-14 (Test N/A, Unpackaged Nonoperating Thermal Shock)	-40…+85 °C (-40…+185 °F)
Relative humidity IEC 60068-2-30 (Test dB, Unpackaged Damp Heat)	5…95% noncondensing
Vibration IEC 60068-2-6 (Test Fc, Operating)	2 g @ 10…500 Hz
Shock, operating IEC 60068-2-27 (Test Ea, Unpackaged Shock)	30 g
Shock, nonoperating IEC 60068-2-27 (Test Ea, Unpackaged Shock)	50 g
Emissions	IEC 61000-6-4
ESD immunity IEC 61000-4-2	6 kV contact discharges 8 kV air discharges
Radiated RF immunity IEC 61000-4-3	10V/m with 1 kHz sine-wave 80% AM from 80…2000 MHz 10V/m with 200 Hz 50% Pulse 100% AM @ 900 MHz 10V/m with 200 Hz 50% Pulse 100% AM @ 1890 MHz 3V/m with 1 kHz sine-wave 80% AM from 2000…2700 MHz
EFT/B immunity IEC 61000-4-4	±4 kV at 5 kHz on shielded signal ports
Surge transient immunity IEC 61000-4-5	±2 kV line-earth (CM) on shielded signal ports
Conducted RF immunity IEC 61000-4-6	10V rms with 1 kHz sine-wave 80% AM from 150 kHz…80 MHz

Certifications - 1756-IF8I, 1756-IF8IK

Certification (when product is marked)[1]	1756-IF8I, 1756-IF8IK
c-UL-us	UL Listed Industrial Control Equipment, certified for US and Canada. See UL File E65584. UL Listed for Class I, Division 2 Group A,B,C,D Hazardous Locations, certified for U.S. and Canada. See UL File E194810.
CE	European Union 2014/30/EU EMC Directive, compliant with: • EN 61326-1; Meas./Control/Lab., Industrial Requirements • EN 61000-6-2; Industrial Immunity • EN 61000-6-4; Industrial Emissions • EN 61131-2; Programmable Controllers (Clause 8, Zone A & B) European Union 2014/35/EU LVD, compliant with: • EN 61131-2; Programmable Controllers (Clause 11)
RCM	Australian Radiocommunications Act, compliant with: • EN 61000-6-4; Industrial Emissions
Ex	European Union 2014/34/EU ATEX Directive, compliant with: • EN 60079-15; Potentially Explosive Atmospheres, Protection "n" • EN 60079-0; General Requirements • II 3 G Ex nA IIC T4 Gc • DEMKO13ATEX1325026X
IECEx	IECEx System, compliant with: • IEC 60079-0; General Requirements • IEC 60079-15; Potentially Explosive Atmospheres, Protection "n" • II 3 G Ex nA IIC T4 Gc • IECEx UL 14.0008X
KC	Korean Registration of Broadcasting and Communications Equipment, compliant with: Article 58-2 of Radio Waves Act, Clause 3
EAC	Russian Customs Union TR CU 020/2011 EMC Technical Regulation Russian Customs Union TR CU 004/2011 LV Technical Regulation

(1) See the Product Certification link at rok.auto/certifications for Declarations of Conformity, Certificates, and other certification details.

1756-IF8IH, 1756-IF8IHK

ControlLogix isolated current analog input module with HART protocol

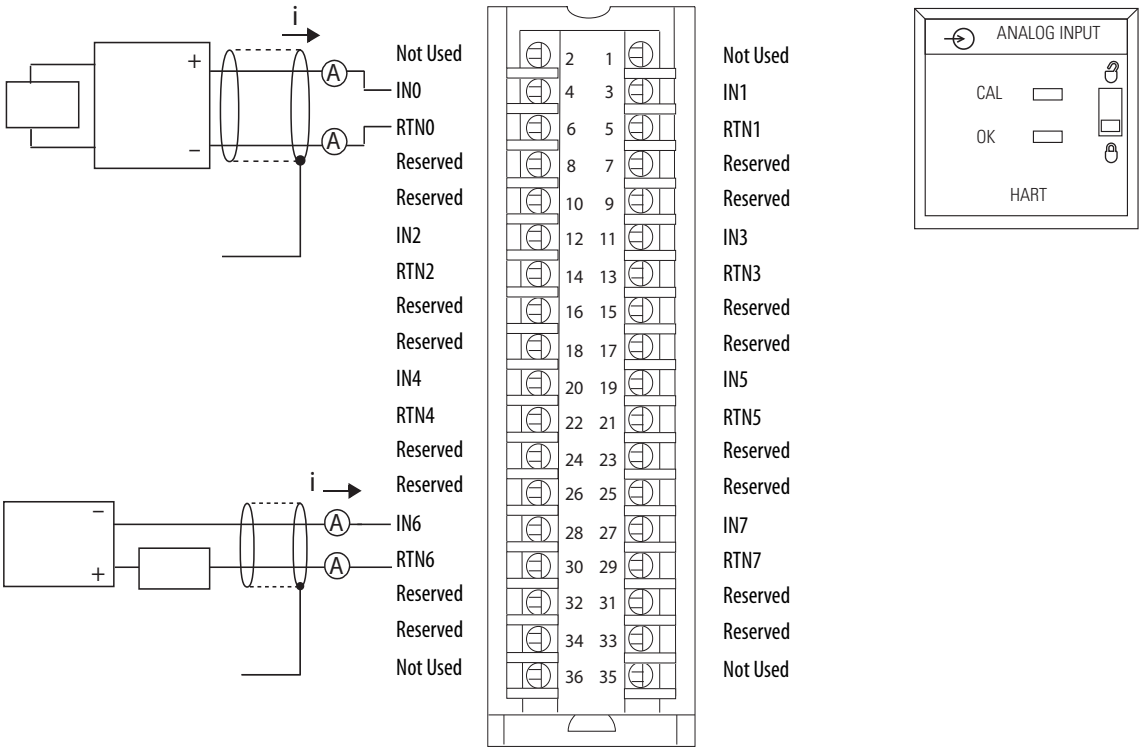

Technical Specifications - 1756-IF8IH, 1756-IF8IHK

Attribute	1756-IF8IH, 1756-IF8IHK
Inputs	Eight current inputs
Input range	0…20 mA (0…20.58 mA) 4…20 mA (3.42…20.58 mA)
Resolution	16…21 bits
Voltage and current ratings	Backplane: 210 mA @ 5.1V DC, 110 mA @ 24V DC Input voltage range: 5…30V DC Input current range: 0…20 mA, 4…20 mA
Power dissipation within module	4 W
Inrush current	400 mA @ 5V 450 mA @ 24V
Isolation voltage	250V (continuous) Reinforced Insulation Type, inputs to backplane. Basic Insulation Type, input to input, and inputs to ground.
Input impedance	250 Ω ±5 Ω
Open circuit detection time	5 s (4...20 mA range only)
Input overvoltage protection	+28.8V DC
Normal mode noise rejection	> 90 dB @ 50 Hz and 60 Hz with 10 Hz filter > 74 dB @ 50 Hz and 60 Hz with 15 Hz filter > 33 dB @ 50 Hz and > 90 dB @ 60 Hz with 20 Hz filter
Common mode noise rejection	> 90 dB @ 50 Hz and 60 Hz (10 Hz, 15 Hz, or 20 Hz filters only)
Calibrated accuracy at 25 °C with HART disabled	0.15…1.5% of full scale, filter dependent

Technical Specifications - 1756-IF8IH, 1756-IF8IHK

Attribute	1756-IF8IH, 1756-IF8IHK
Calibrated accuracy at 25 °C with HART enabled	1.5% of full scale with 250 Hz filter 0.5% of full scale with 100 Hz filter 0.2% of full scale with 50 Hz or 60 Hz filter 0.15% of full scale with 15 Hz or 20 Hz filter Monotonicity not guaranteed
Calibrated accuracy over full temperature range with HART enabled	1.8% of full scale with 250 Hz filter 0.8% of full scale with 100 Hz filter 0.5% of full scale with 50 Hz or 60 Hz filter 0.4% of full scale with 15 Hz or 20 Hz filter Monotonicity not guaranteed
Calibration interval	12 months typical
Input offset drift with temperature	<=300 µA/°C
Gain drift with temperature	20 ppm/°C
Module error over full temperature range with HART disabled	0.3% of range (all filters)
Module scan time for all channels - analog, min	18…488 ms (filter dependent)
Typical module HART dynamic variables update time for all channels	1 s typical if all channels are HART enabled Pass through messages, handheld communications, secondary masters, communication errors, or configuration changes can significantly increase the update time.
Data format	32-bit floating point
Input conversion method	Sigma-Delta ADC (24-bit converter)
Module keying	Electronic, software configurable
Removable terminal block	1756-TBCH 1756-TBS6H
RTB keying	User-defined mechanical
Slot width	1
Wire Size	1756-TBCH Single wire connection: 0.33…2.1 mm2(22…14 AWG) solid or stranded shielded copper wire, rated at 105 °C (221 °F) or greater, 1.2 mm (3/64 in.) insulation max 1756-TBS6H Single wire connection: 0.33…2.1 mm2(22…14 AWG) solid or stranded shielded copper wire, rated at 105 °C (221 °F) or greater, 1.2 mm (3/64 in.) insulation max
Terminal block torque specs	1756-TBCH 0.4 N•m (4. 4 lb•in)
Wire category	2 - on signal ports(1)
Wire type	Copper
Enclosure type	None (open-style)
North American temp code	T5
ATEX temp code	T4
IECEx temp code	T4

(1) Use this conductor category information for planning conductor routing. See Industrial Automation Wiring and Grounding Guidelines, publication 1770-4.1.

Environmental Specifications - 1756-IF8IH, 1756-IF8IHK

Attribute	1756-IF8IH, 1756-IF8IHK
Temperature, operating IEC 60068-2-1 (Test Ad, Operating Cold), IEC 60068-2-2 (Test Bd, Operating Dry Heat), IEC 60068-2-14 (Test Nb, Operating Thermal Shock)	0 °C < Ta < +60 °C (+32 °F < Ta < +140 °F)
Temperature, surrounding air, max	60 °C (140 °F)
Temperature, nonoperating IEC 60068-2-1 (Test Ab, Unpackaged Nonoperating Cold), IEC 60068-2-2 (Test Bb, Unpackaged Nonoperating Dry Heat), IEC 60068-2-14 (Test Na, Unpackaged Nonoperating Thermal Shock)	-40…+85 °C (-40…+185 °F)
Relative humidity IEC 60068-2-30 (Test dB, Unpackaged Damp Heat)	5…95% noncondensing
Vibration IEC 60068-2-6 (Test Fc, Operating)	2 g @ 10…500 Hz
Shock, operating IEC 60068-2-27 (Test Ea, Unpackaged Shock)	30 g
Shock, nonoperating IEC 60068-2-27 (Test Ea, Unpackaged Shock)	50 g
Emissions	IEC 61000-6-4
ESD immunity IEC 61000-4-2	6 kV contact discharges 8 kV air discharges
Radiated RF immunity IEC 61000-4-3	10V/m with 1 kHz sine-wave 80% AM from 80…2000 MHz 10V/m with 200 Hz 50% Pulse 100% AM @ 900 MHz 10V/m with 200 Hz 50% Pulse 100% AM @ 1890 MHz 10V/m with 1 kHz sine-wave 80% AM from 2000…2700 MHz
EFT/B immunity IEC 61000-4-4	±2 kV at 5 kHz on signal ports
Surge transient immunity IEC 61000-4-5	±2 kV line-earth (CM) on shielded ports
Conducted RF immunity IEC 61000-4-6	10V rms with 1 kHz sine-wave 80% AM from 150 kHz…80 MHz

Certifications - 1756-IF8IH, 1756-IF8IHK

Certification (when product is marked)[1]	1756-IF8IH, 1756-IF8IHK
c-UL-us	UL Listed Industrial Control Equipment, certified for US and Canada. See UL File E65584 UL Listed for Class I, Division 2 Group A, B, C, D Hazardous Locations, certified for US and Canada. See UL File E194810.
CE	European Union 2014/30/EU EMC Directive, compliant with: • EN 61326-1: Meas./Control/Lab., Industrial Requirements • EN 61000-6-2: Industrial Immunity • EN 61000-6-4: Industrial Emissions • EN 61131-2: Programmable Controllers (Clause 8, Zone A and B) European Union 2014/35/EU LVD, compliant with: • EN 61131-2: Programmable Controllers (Clause 11)
RCM	Australian Radiocommunications Act, compliant with: • EN 61000-6-4: Industrial Emissions
Ex	European Union 2014/34/EU ATEX Directive, compliant with: • EN 60079-0; General Requirements • EN 60079-15; Potentially Explosive Atmospheres, Protection "n" • II 3 G Ex nA IIC T4 Gc • DEMKO14ATEX1238X
IECEx	IECEx System, compliant with: • IEC 60079-0; General Requirements • IEC 60079-15; Potentially Explosive Atmospheres, Protection "n" • II 3 G Ex nA IIC T4 Gc • IECEx UL 16.0110X
KC	Korean Registration of Broadcasting and Communications Equipment, compliant with: Article 58-2 of Radio Waves Act, Clause 3
EAC	Russian Customs Union TR CU 020/2011 EMC Technical Regulation Russian Customs Union TR CU 004/2011 LV Technical Regulation

(1) See the Product Certification link at rok.auto/certifications for Declarations of Conformity, Certificates, and other certification details.

1756-IF16, 1756-IF16K

ControlLogix voltage/current analog input module

1756-IF16, 1756-IF16K Differential Current

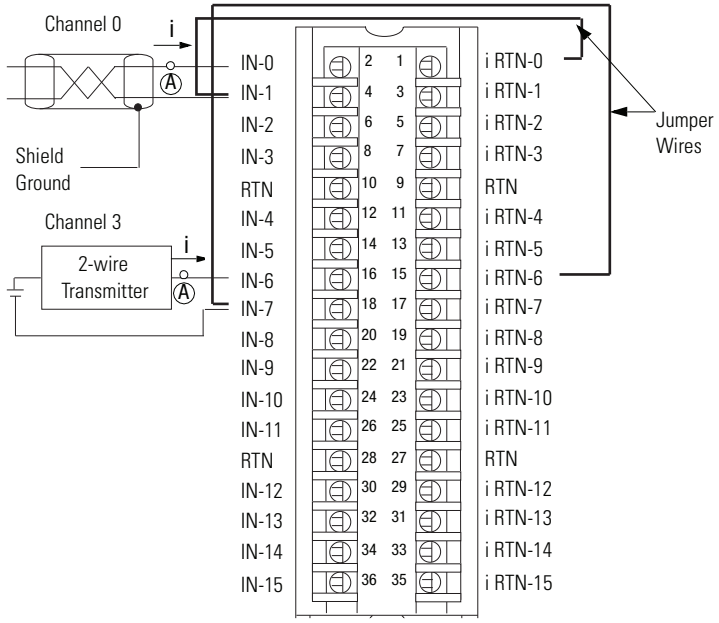

Use this table when wiring your module in Differential mode.

This channel	Uses these terminals
Channel 0	IN-0 (+), IN-1 (-), i RTN-0
Channel 1	IN-2 (+), IN-3 (-), i RTN-2
Channel 2	IN-4 (+), IN-5 (-), i RTN-4
Channel 3	IN-6 (+), IN-7 (-), i RTN-6
Channel 4	IN-8 (+), IN-9 (-), i RTN-8
Channel 5	IN-10 (+), IN-11 (-), i RTN-10
Channel 6	IN-12 (+), IN-13 (-), i RTN-12
Channel 7	IN-14 (+), IN-15 (-), i RTN-14

- All terminals marked RTN are connected internally.
- A 249 Ω current loop resistor is located between IN-*x* and i RTN-*x* terminals.
- If multiple (+) or multiple (-) terminals are tied together, connect that tie point to an RTN terminal to maintain the accuracy of the module.
- Place additional loop devices (such as strip chart recorders) at the A location in the current loop.

IMPORTANT: When operating in 4-channel, High-Speed mode, only use channels 0, 2, 4, and 6.

1756-IF16, 1756-IF16K Differential Voltage

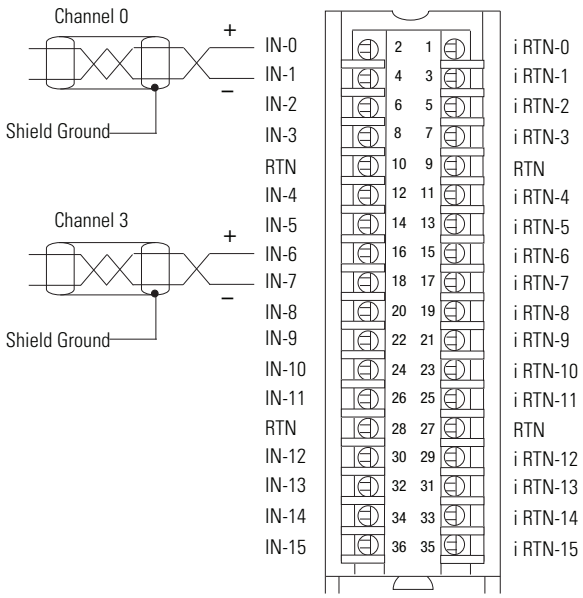

Use this table when wiring your module in Differential mode.

This channel	Uses these terminals
Channel 0	IN-0 (+), IN-1 (-)
Channel 1	IN-2 (+), IN-3 (-)
Channel 2	IN-4 (+), IN-5 (-)
Channel 3	IN-6 (+), IN-7 (-)
Channel 4	IN-8 (+), IN-9 (-)
Channel 5	IN-10 (+), IN-11 (-)
Channel 6	IN-12 (+), IN-13 (-)
Channel 7	IN-14 (+), IN-15 (-)

- All terminals marked RTN are connected internally.
- If multiple (+) or multiple (-) terminals are tied together, connect that tie point to an RTN terminal to maintain the accuracy of the module.
- Terminals marked RTN or i RTN are not used for differential voltage wiring.

IMPORTANT: When operating in 4-channel, High-Speed mode, only use channels 0, 2, 4, and 6.

1756-IF16, 1756-IF16K Single-ended Current

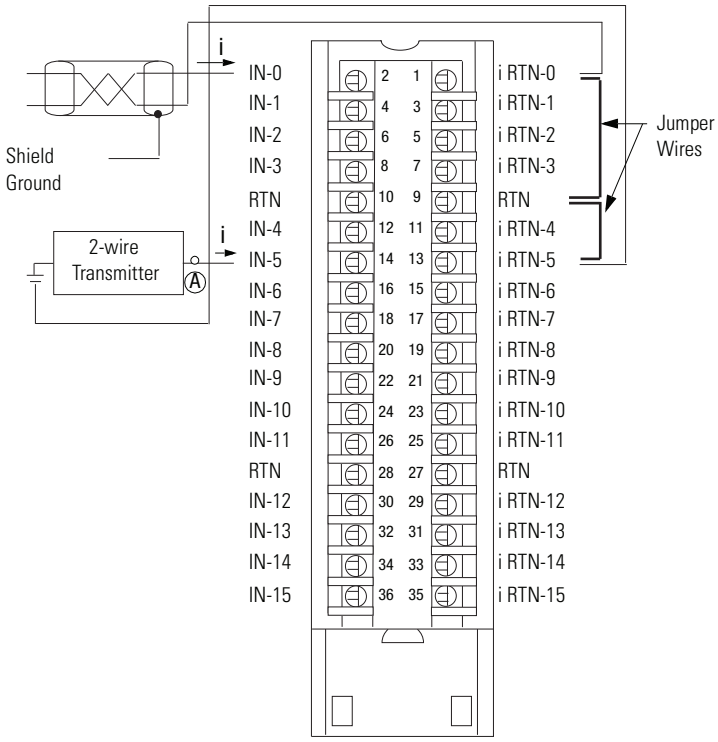

- All terminals marked RTN are connected internally.
- For current applications, all terminals marked i RTN must be wired to terminals marked RTN.
- A 249 Ω current loop resistor is located between IN-*x* and iRTN-*x* terminals.
- Place additional loop devices (such as strip chart recorders) at the A location in the current loop.

1756-IF16, 1756-IF16K Single-ended Voltage

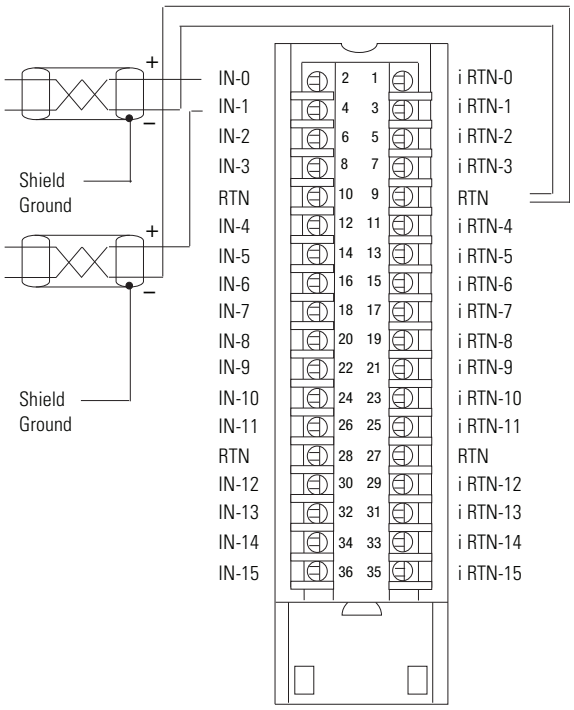

- All terminals marked RTN are connected internally.
- Terminals marked i RTN are not used for single-ended voltage wiring.

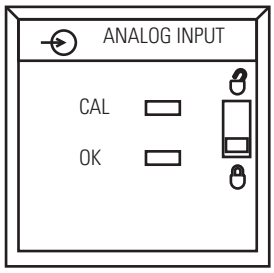

Technical Specifications - 1756-IF16, 1756-IF16K

Attribute	1756-IF16, 1756-IF16K
Inputs	16 single ended, 8 differential or 4 differential (high speed)
Input range	±10V 0…10V 0…5V 0…20 mA
Resolution	320 µV/count (15 bits + sign bipolar) @ ±10.25V 160 µV/count (16 bits) @ 0…10.25V 80 µV/count (16 bits) @ 0…5.125V 0.32 µA/count (16 bits) @ 0…20.5 mA
Current draw @ 5.1V	150 mA
Current draw @ 24V	65 mA
Total backplane power	2.33 W
Voltage and current ratings	Backplane: 5.1V DC, 150 mA max 24V DC, 65 mA max Input Voltage Range: -10…+10V Input Current Range: 4…20mA Limited to 100VA
Power consumption	2.3 W
Power dissipation	Voltage: 2.3 W Current: 3.9 W
Thermal dissipation	Voltage: 7.84 BTU/hr Current: 13.3 BTU/hr
Input impedance	Voltage: >10 MΩ Current: 249 Ω
Open circuit detection time	Differential voltage - Positive full scale reading within 5 s Single-ended/differential current - Negative full scale reading within 5 s Single-ended voltage - Even-numbered channels go to positive full scale reading within 5 s, odd-numbered channels go to negative full scale reading within 5 s
Overvoltage protection, max	Voltage: 30V DC Current: 8V DC
Normal mode noise rejection	>80 dB @ 50/60 Hz(2)
Common mode noise rejection	>100 dB @ 50/60 Hz
Channel bandwidth	15 Hz (-3 dB)(2)
Settling time	<80 ms to 5% of full scale(2)
Calibrated accuracy 25 °C (77 °F)	Voltage: Better than 0.05% of range Current: Better than 0.15% of range
Offset drift	45 µV/°C
Gain drift with temperature	Voltage: 15 ppm/°C Current: 20 ppm/°C
Module error	Voltage: 0.1% of range Current: 0.3% of range
Module input scan time, min	16 pt single-ended: 16…488 ms 8 pt differential: 8…244 ms 4 pt differential: 5…122 ms(2)
Onboard data alarming	Yes
Scaling to engineering units	Yes
Real-time channel sampling	Yes

Technical Specifications - 1756-IF16, 1756-IF16K

Attribute	1756-IF16, 1756-IF16K
Data format	Integer mode (left justified, 2 s complement) IEEE 32-bit floating point
Module conversion method	Sigma-Delta
Isolation voltage	250V (continuous), Reinforced insulation type, Inputs-to-Backplane. No isolation between individual Inputs.
Module keying	Electronic, software configurable
Removable terminal block	1756-TBCH 1756-TBS6H
RTB keying	User-defined mechanical
Slot width	1
Wire size	1756-TBCH Single wire connection: 0.33…2.1 mm2(22…14 AWG) solid or stranded shielded copper wire, rated at 105 °C (221 °F) or greater, 1.2 mm (3/64 in.) insulation max 1756-TBS6H Single wire connection: 0.33…2.1 mm2(22…14 AWG) solid or stranded shielded copper wire, rated at 105 °C (221 °F) or greater, 1.2 mm (3/64 in.) insulation max
Terminal block torque specs	1756-TBCH: 0.5 N•m (4.4 lb•in)
Wire category(1)	2 - on signal ports
Enclosure type	None (open-style)
North American temp code	T4A
ATEX temp code	T4
IECEx temp code	T4

(1) Use this Conductor Category information for planning conductor routing. See the Industrial Automation Wiring and Grounding Guidelines, publication 1770-4.1.

(2) Notch filter dependent.

Environmental Specifications - 1756-IF16, 1756-IF16K

Attribute	1756-IF16, 1756-IF16K
Temperature, operating IEC 60068-2-1 (Test Ad, Operating Cold), IEC 60068-2-2 (Test Bd, Operating Dry Heat), IEC 60068-2-14 (Test Nb, Operating Thermal Shock)	0 °C < Ta < +60 °C (+32 °F < Ta < +140 °F)
Temperature, surrounding air, max	60 °C (140 °F)
Temperature, nonoperating IEC 60068-2-1 (Test Ab, Unpackaged Nonoperating Cold), IEC 60068-2-2 (Test Bb, Unpackaged Nonoperating Dry Heat), IEC 60068-2-14 (Test N/A, Unpackaged Nonoperating Thermal Shock)	-40…+85 °C (-40…+185 °F)
Relative humidity IEC 60068-2-30 (Test dB, Unpackaged Damp Heat)	5…95% noncondensing
Vibration IEC 60068-2-6 (Test Fc, Operating)	2 g @ 10…500 Hz
Shock, operating IEC 60068-2-27 (Test Ea, Unpackaged Shock)	30 g
Shock, nonoperating IEC 60068-2-27 (Test Ea, Unpackaged Shock)	50 g
Emissions	IEC 61000-6-4
ESD immunity IEC 61000-4-2	6 kV contact discharges 8 kV air discharges

Environmental Specifications - 1756-IF16, 1756-IF16K

Attribute	1756-IF16, 1756-IF16K
Radiated RF immunity IEC 61000-4-3	10V/m with 1 kHz sine-wave 80% AM from 80…2000 MHz 10V/m with 200 Hz 50% Pulse 100% AM @ 900 MHz 10V/m with 200 Hz 50% Pulse 100% AM @ 1890 MHz 3V/m with 1 kHz sine-wave 80% AM from 2000…2700 MHz
EFT/B immunity IEC 61000-4-4	±2 kV at 5 kHz on signal ports
Surge transient immunity IEC 61000-4-5	±2 kV line-earth (CM) on shielded ports
Conducted RF immunity IEC 61000-4-6	10V rms with 1 kHz sine-wave 80% AM from 150 kHz…80 MHz

Certifications - 1756-IF16, 1756-IF16K

Certification (when product is marked)(1)	1756-IF16, 1756-IF16K
UL	UL Listed Industrial Control Equipment. See UL File E65584.
CSA	CSA Certified Process Control Equipment. See CSA File LR54689C. CSA Certified Process Control Equipment for Class I, Division 2 Group A,B,C,D Hazardous Locations. See CSA File LR69960C.
FM	FM Approved Equipment for use in Class I Division 2 Group A,B,C,D Hazardous Locations
CE	European Union 2014/30/EU EMC Directive, compliant with: • EN 61326-1; Meas./Control/Lab., Industrial Requirements • EN 61000-6-2; Industrial Immunity • EN 61000-6-4; Industrial Emissions • EN 61131-2; Programmable Controllers (Clause 8, Zone A & B) European Union 2014/35/EU LVD, compliant with: EN 61131-2; Programmable Controllers (Clause 11)
RCM	Australian Radiocommunications Act, compliant with: EN 61000-6-4; Industrial Emissions
Ex	European Union 2014/34/EU ATEX Directive, compliant with: • EN 60079-0; General Requirements • EN 60079-15; Potentially Explosive Atmospheres, Protection "n" • II 3 G Ex nA IIC T4 Gc • DEMKO15ATEX1482X
IECEx	IECEx System, compliant with: • IEC 60079-0; General Requirements • IEC 60079-15; Potentially Explosive Atmospheres, Protection "n" • II 3 G Ex nA IIC T4 Gc • IECEx UL 15.0053X
KC	Korean Registration of Broadcasting and Communications Equipment, compliant with: Article 58-2 of Radio Waves Act, Clause 3
EAC	Russian Customs Union TR CU 020/2011 EMC Technical Regulation Russian Customs Union TR CU 004/2011 LV Technical Regulation

(1) See the Product Certification link at rok.auto/certifications for Declarations of Conformity, Certificates, and other certification details.

1756-IF16H, 1756-IF16HK

ControlLogix current analog input module with HART protocol.

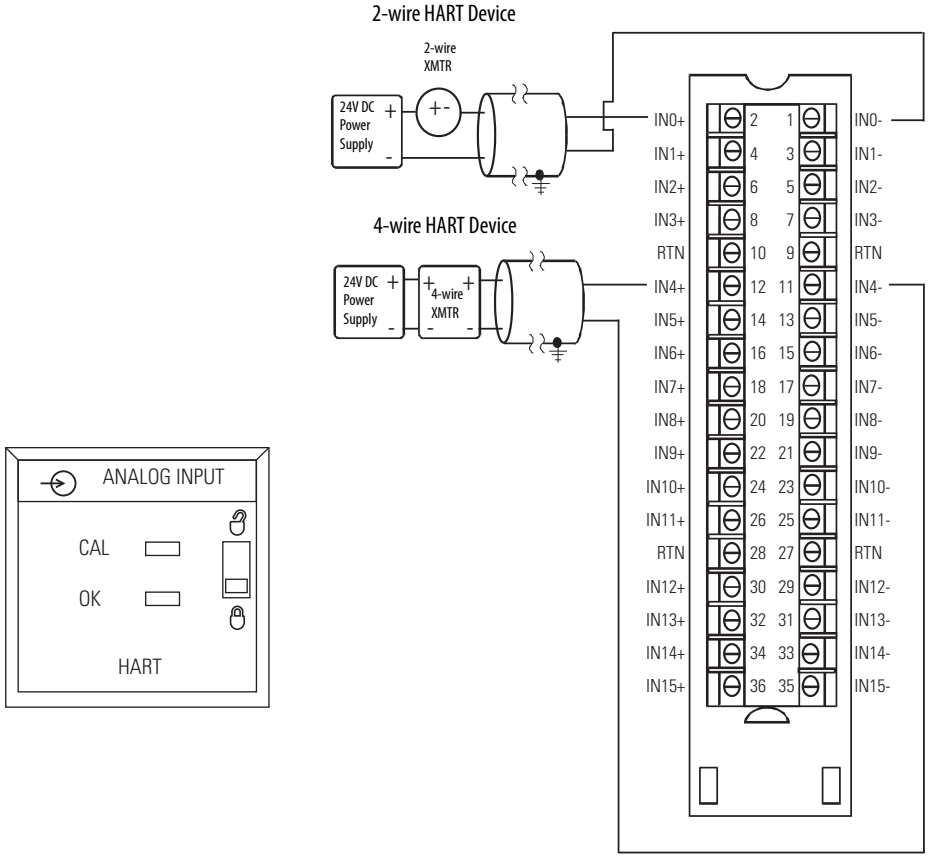

When a common supply is used, tie the IN- to RTN.

Technical Specifications - 1756-IF16H, 1756-IF16HK

Attribute	1756-IF16H, 1756-IF16HK
Inputs	Sixteen differential, current Dedicated HART modem per channel
Input range	0…20 mA 4…20 mA
Resolution	16…21 bits
Voltage and current ratings	Backplane: 5.1V DC @ 200 mA, 24V DC @ 125 mA Input current range: 0…20 mA, 4…20 mA
Total backplane power	4.02 W
Power dissipation, max	6 W
Isolation voltage	50V (continuous), Basic insulation type, Input Channels to Backplane No isolation between individual Input Channels
Thermal dissipation	12 BTU/hr
Input impedance	249 Ω
Open circuit detection time	Positive full scale reading within 5 s
Overvoltage protection, max	8V DC

Technical Specifications - 1756-IF16H, 1756-IF16HK

Attribute	1756-IF16H, 1756-IF16HK
Normal mode noise rejection	74 dB @ 50/60 Hz (15 Hz filter) 90 dB @ 60 Hz (20 Hz filter)
Common mode noise rejection	> 90 dB @ 50/60 Hz (15 Hz and 20 Hz filters only)
Repeatability	Better than 0.01% of range (15 Hz and 20 Hz filters only)
Calibrated accuracy	Better than 0.13% of range (all filters)
Calibration interval	12 months typical
Offset drift	27 µV/°C
Gain drift with temperature	11ppm/°C
Module error	0.3% of range
Module input scan time, min	11…328 ms (filter dependent)
Module HART scan time	Estimate 1 s if all channels are HART enabled
Data format	Integer mode (left justified, 2 s complement) IEEE 32-bit floating point
Input conversion method	Successive approximation
Output conversion method	R-Ladder DAC, monotonicity with no missing codes
Module keying	Electronic, software configurable
Removable terminal block	1756-TBCH 1756-TBS6H
RTB keying	User-defined mechanical
Slot width	1
Wire size	1756-TBCH Single wire connection: 0.33…2.1 mm2(22…14 AWG) solid or stranded shielded copper wire, rated at 105 °C (221 °F) or greater, 1.2 mm (3/64 in.) insulation max 1756-TBS6H Single wire connection: 0.33…2.1 mm2(22…14 AWG) solid or stranded shielded copper wire, rated at 105 °C (221 °F) or greater, 1.2 mm (3/64 in.) insulation max
Terminal block torque spec	1756-TBCH 0.5 N•m (4.4 lb•in)
Wire category(1)	2 - on signal ports
Wire type	Copper
Enclosure type rating	None (open-style)
North American temp code	T5
ATEX temp code	T4
IECEx temp code	T4

(1) Use this Conductor Category information for planning conductor routing. See the Industrial Automation Wiring and Grounding Guidelines, publication 1770-4.1.

Environmental Specifications - 1756-IF16H, 1756-IF16HK

Attribute	1756-IF16H, 1756-IF16HK
Temperature, operating IEC 60068-2-1 (Test Ad, Operating Cold), IEC 60068-2-2 (Test Bd, Operating Dry Heat), IEC 60068-2-14 (Test Nb, Operating Thermal Shock)	0 °C < Ta < +60 °C (+32 °F < Ta < +140 °F)
Temperature, surrounding air, max	60 °C (140 °F)
Temperature, nonoperating IEC 60068-2-1 (Test Ab, Unpackaged Nonoperating Cold), IEC 60068-2-2 (Test Bb, Unpackaged Nonoperating Dry Heat), IEC 60068-2-14 (Test N/A, Unpackaged Nonoperating Thermal Shock)	-40…+85 °C (-40…+185 °F)
Relative humidity IEC 60068-2-30 (Test dB, Unpackaged Damp Heat)	5…95% noncondensing
Vibration IEC 60068-2-6 (Test Fc, Operating)	2 g @ 10…500 Hz
Shock, operating IEC 60068-2-27 (Test Ea, Unpackaged Shock)	30 g
Shock, nonoperating IEC 60068-2-27 (Test Ea, Unpackaged Shock):	50 g
Emissions	IEC 61000-6-4
ESD immunity IEC 61000-4-2	6 kV contact discharges 8 kV air discharges
Radiated RF immunity IEC 61000-4-3	10V/m with 1 kHz sine-wave 80% AM from 80…2000 MHz 10V/m with 200 Hz 50% Pulse 100% AM @ 900 MHz 10V/m with 200 Hz 50% Pulse 100% AM @ 1890 MHz 1V/m with 1 kHz sine-wave 80% AM from 2000…2700 MHz
EFT/B immunity IEC 61000-4-4	±2 kV at 5 kHz on signal ports
Surge transient immunity IEC 61000-4-5	±2 kV line-earth (CM) on shielded ports
Conducted RF immunity IEC 61000-4-6	10V rms with 1 kHz sine-wave 80% AM from 150 kHz…80 MHz

Certifications - 1756-IF16H, 1756-IF16HK

Certification (when product is marked)[1]	1756-IF16H, 1756-IF16HK
c-UL-us	UL Listed Industrial Control Equipment, certified for US and Canada. See UL File E65584. UL Listed for Class I, Division 2 Group A,B,C,D Hazardous Locations, certified for U.S. and Canada. See UL File E194810.
CE	European Union 2014/30/EU EMC Directive, compliant with: • EN 61326-1; Meas./Control/Lab., Industrial Requirements • EN 61000-6-2; Industrial Immunity • EN 61000-6-4; Industrial Emissions • EN 61131-2; Programmable Controllers (Clause 8, Zone A & B)
RCM	Australian Radiocommunications Act, compliant with: • EN 61000-6-4; Industrial Emissions
Ex	European Union 2014/34/EU ATEX Directive, compliant with: • EN 60079-0; General Requirements • EN 60079-15; Potentially Explosive Atmospheres, Protection "n" • II 3 G Ex nA IIC T4 Gc • DEMKO12ATEX1219040X
IECEx	IECEx System, compliant with: • IEC 60079-0; General Requirements • IEC 60079-15; Potentially Explosive Atmospheres, Protection "n" • II 3 G Ex nA IIC T4 Gc • IECEx UL 16.0109X
KC	Korean Registration of Broadcasting and Communications Equipment, compliant with: Article 58-2 of Radio Waves Act, Clause 3
EAC	Russian Customs Union TR CU 020/2011 EMC Technical Regulation Russian Customs Union TR CU 004/2011 LV Technical Regulation

(1) See the Product Certification link at rok.auto/certifications for Declarations of Conformity, Certificates, and other certification details.

1756-IF16IH, 1756-IF16IHK

ControlLogix current analog input module with HART protocol

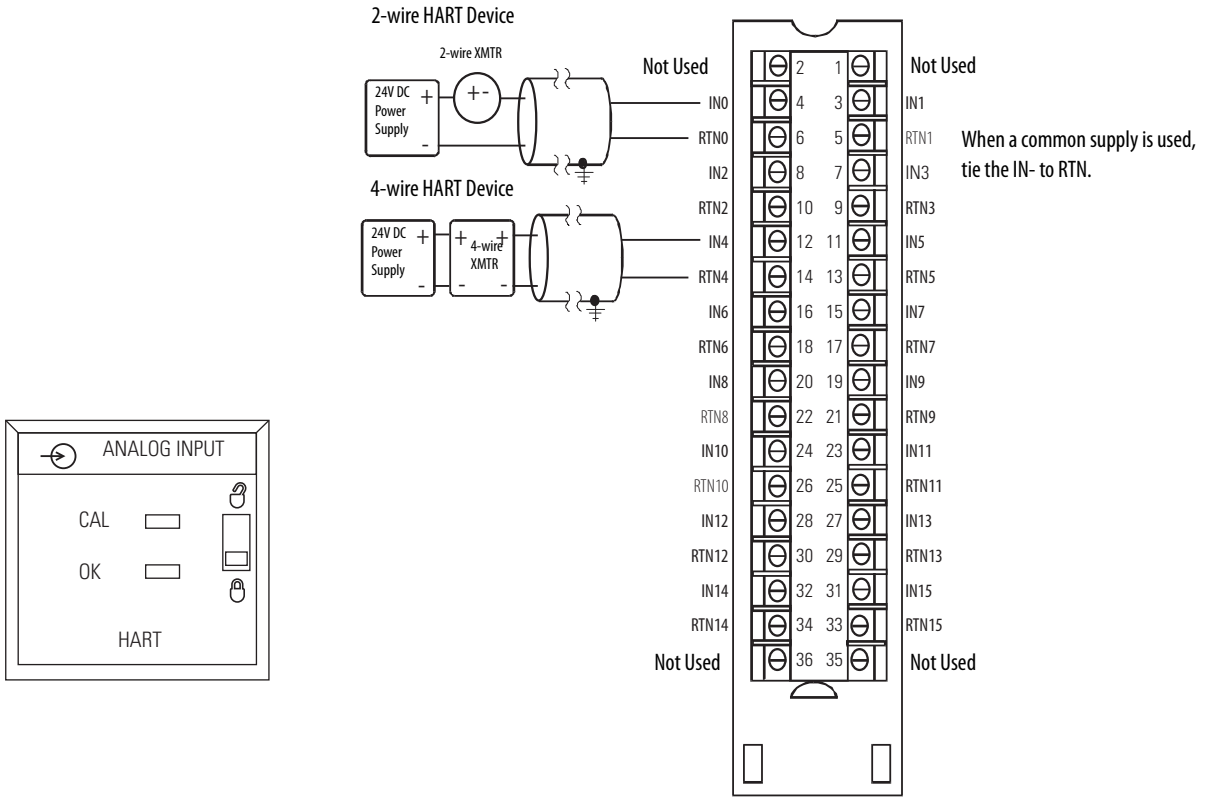

Technical Specifications - 1756-IF16IH, 1756-IF16IHK

Attribute	1756-IF16IH, 1756-IF16IHK
Voltage and current ratings	Backplane: 225 mA @ 5.1V DC, 200 mA @ 24V DC 16 Inputs Input current range: 0…20 mA, 4…20 mA
Resolution	16…21 bits
Power dissipation	5.30 W
Inrush current	400 mA @ 5.1V DC 450 mA @ 24V DC
Isolation voltage	250V (continuous) Reinforced Insulation Type, inputs to backplane. Basic Insulation Type, input to input, and inputs to ground
Input impedance	250 Ω (±5 Ω)
Open circuit detection time	5 s, 4…20 mA range only
Input overvoltage protection	28.8V DC
Normal mode noise rejection	90 dB @ 50/60 Hz (10 Hz filter) 74 dB @ 50/60 Hz (15 Hz filter) 33 dB @ 60 Hz, 90 dB @60 Hz (20 Hz filter)
Common mode noise rejection	> 90 dB @ 50/60 Hz (10 Hz, 15 Hz, and 20 Hz filters only)
Calibrated accuracy at 25 °C with HART disabled	0.15…1.5% of full scale, dependent on selected filter

Technical Specifications - 1756-IF16IH, 1756-IF16IHK

Attribute	1756-IF16IH, 1756-IF16IHK
Calibrated accuracy at 25 °C with HART enabled	1.5% of full scale with 250 Hz filter 0.5% of full scale with 100 Hz filter 0.2% of full scale with 50 Hz or 60 Hz filter 0.15% of full scale with 15 Hz or 20 Hz filter Monotonicity not guaranteed
Calibrated accuracy over full temperature range with HART enabled	1.8% of full scale with 250 Hz filter 0.8% of full scale with 100 Hz filter 0.5% of full scale with 50 Hz or 60 Hz filter 0.4% of full scale with 15 Hz or 20 Hz filter Monotonicity not guaranteed
Calibration interval	12 months typical
Input offset drift with temperature	300 µA/°C
Gain drift with temperature	20 ppm/°C
Module error over full temperature range with HART disabled	0.3% of range (all filters)
Module scan time for all channels - analog, min	14…428 ms (filter dependent)
Typical module HART dynamic variables update time for all channels	1 s typical with no pass through or device information messaging active
Data format	Integer mode (left justified, 2 s complement) IEEE 32-bit floating point
Input conversion method	Sigma-Delta ADC (24-bit converter)
Output conversion method	Sigma-Delta ADC (24-bit converter)
Module keying	ASIC does not support module keying
Removable terminal block	1756-TBCH 1756-TBS6H
RTB keying	User-defined mechanical
Slot width	1
Wire size	1756-TBCH Single wire connection: 0.33…2.1 mm2(22…14 AWG) solid or stranded shielded copper wire, rated at 105 °C (221 °F) or greater, 1.2 mm (3/64 in.) insulation max 1756-TBS6H Single wire connection: 0.33…2.1 mm2(22…14 AWG) solid or stranded shielded copper wire, rated at 105 °C (221 °F) or greater, 1.2 mm (3/64 in.) insulation max
Terminal block torque specs	1756-TBCH 0.5 N•m (4.4 lb·in)
Wiring category(1)	2 - on signal ports
Wire type	Copper
Enclosure type rating	None (open-style)
North American temp code	T5
ATEX temp code	T4
IECEx temp code	T4

(1) Use this conductor category information for planning conductor routing. See Industrial Automation Wiring and Grounding Guidelines, publication 1770-4.1.

Environmental Specifications - 1756-IF16IH, 1756-IF16IHK

Attribute	1756-IF16IH, 1756-IF16IHK
Temperature, operating IEC 60068-2-1 (Test Ad, Operating Cold), IEC 60068-2-2 (Test Bd, Operating Dry Heat), IEC 60068-2-14 (Test Nb, Operating Thermal Shock)	0 °C < Ta < +60 °C (+32 °F < Ta < +140 °F)
Temperature, surrounding air, max	60 °C (140 °F)
Temperature, nonoperating IEC 60068-2-1 (Test Ab, Unpackaged Nonoperating Cold), IEC 60068-2-2 (Test Bb, Unpackaged Nonoperating Dry Heat), IEC 60068-2-14 (Test N/A, Unpackaged Nonoperating Thermal Shock)	-40…+85 °C (-40…+185 °F)
Relative humidity IEC 60068-2-30 (Test dB, Unpackaged Damp Heat)	5…95% noncondensing
Vibration IEC 60068-2-6 (Test Fc, Operating)	2 g @ 10…500 Hz
Shock, operating IEC 60068-2-27 (Test Ea, Unpackaged Shock)	30 g
Shock, nonoperating IEC 60068-2-27 (Test Ea, Unpackaged Shock)	50 g
Emissions	IEC 61000-6-4
ESD immunity IEC 61000-4-2	6 kV contact discharges 8 kV air discharges
Radiated RF immunity IEC 61000-4-3	10V/m with 1 kHz sine-wave 80% AM from 80…2000 MHz 10V/m with 200 Hz 50% Pulse 100% AM @ 900 MHz 10V/m with 200 Hz 50% Pulse 100% AM @ 1890 MHz 3V/m with 1 kHz sine-wave 80% AM from 2000…6000 MHz
EFT/B immunity IEC 61000-4-4	±2 kV at 5 kHz on signal ports
Surge transient immunity IEC 61000-4-5	±2 kV line-earth (CM) on shielded ports
Conducted RF immunity IEC 61000-4-6	10V rms with 1 kHz sine-wave 80% AM from 150 kHz…80 MHz

Certifications - 1756-IF16IH, 1756-IF16IHK

Certification (when product is marked)[1]	1756-IF16IH, 1756-IF16IHK
c-UL-us	UL Listed Industrial Control Equipment, certified for US and Canada. See UL File E65584. UL Listed for Class I, Division 2 Group A,B,C,D Hazardous Locations, certified for U.S. and Canada. See UL File E194810.
CE	European Union 2014/30/EU EMC Directive, compliant with: • EN 61326-1; Meas./Control/Lab., Industrial Requirements • EN 61000-6-2; Industrial Immunity • EN 61000-6-4; Industrial Emissions • EN 61131-2; Programmable Controllers (Clause 8, Zone A & B) European Union 2014/35/EU LVD, compliant with: • EN 61131-2; Programmable Controllers (Clause 11)
RCM	Australian Radiocommunications Act, compliant with: • EN 61000-6-4; Industrial Emissions
Ex	European Union 2014/34/EU ATEX Directive, compliant with: • EN 60079-0; General Requirements • EN 60079-15; Potentially Explosive Atmospheres, Protection "n" • II 3 G Ex nA IIC T4 Gc • DEMKO14ATEX1238X
IECEx	IECEx System, compliant with: • IEC 60079-0; General Requirements • IEC 60079-15; Potentially Explosive Atmospheres, Protection "n" • II 3 G Ex nA IIC T4 Gc • IECEx UL 16.0110X
KC	Korean Registration of Broadcasting and Communications Equipment, compliant with: Article 58-2 of Radio Waves Act, Clause 3
EAC	Russian Customs Union TR CU 020/2011 EMC Technical Regulation Russian Customs Union TR CU 004/2011 LV Technical Regulation

(1) See the Product Certification link at rok.auto/certifications for Declarations of Conformity, Certificates, and other certification details.

1756-IG16

ControlLogix TTL input module

Standard Wiring

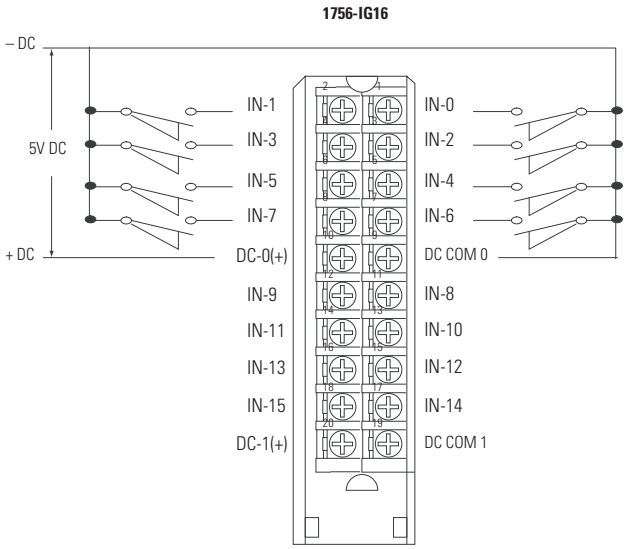

CE Compliant Wiring

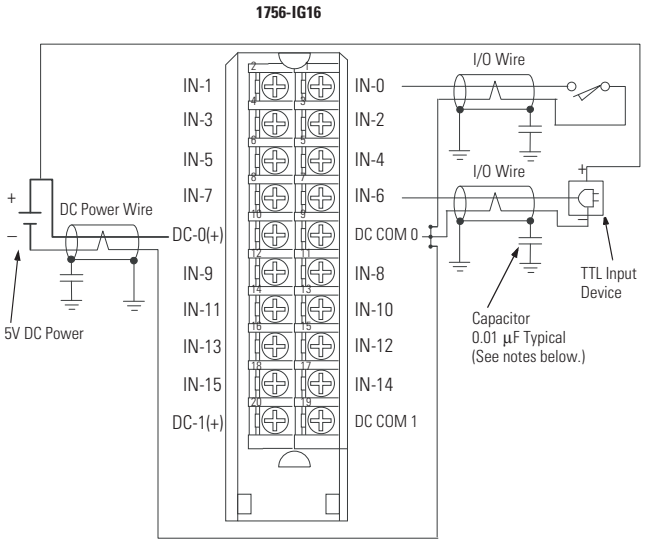

IMPORTANT: I/O cables must be shielded type and cable length must be <10 m (32.8 ft) for maximum EMI noise immunity.

Simplified Schematic

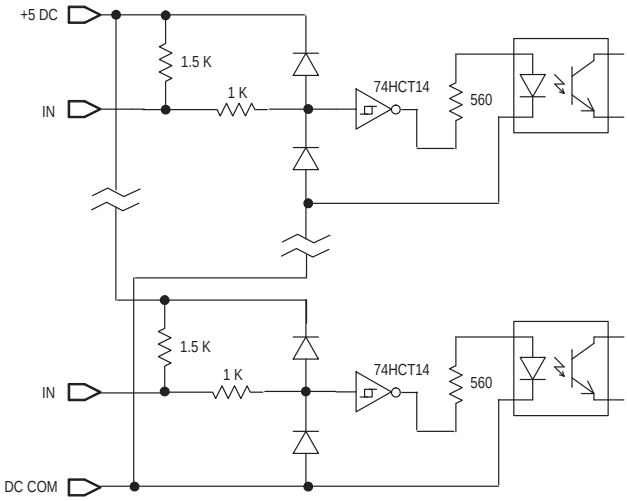

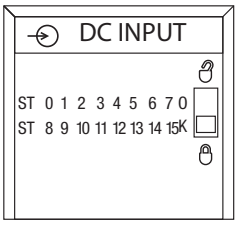

Low to True Format - 1756-IG16

- -0.2...0.8V = Input guaranteed to be in on-state
- 0.8...2.0V = Input state not guaranteed
- 2.0...5.5V = Input guaranteed to be in off-state

Technical Specifications - 1756-IG16

Attribute	1756-IG16
Inputs	16 (8 points/group)
Voltage category	5V DC TTL source (Low=True)(1)
Operating voltage range	4.5…5.5V DC 50 mV P-P ripple max
Input delay time (screw to backplane) Off to On (5-to-0V DC transition) On to Off (0-to-5V DC transition)	 Hardware delay: 270 µs nom/450 µs max + filter time User-selectable filter time: 0 ms, 1 ms, or 2 ms Hardware delay: 390 µs nom/ 700 µs max + filter time User-selectable filter time: 0 ms, 1 ms, 2 ms, 9 ms, or 18 ms
Current draw @ 5.1V	110 mA
Current draw @ 24V	2 mA
Total backplane power	0.61 W
Power dissipation, max	1.4 W @ 60 °C (140 °F)
Thermal dissipation	4.8 BTU/hr @ 60 °C (140 °F)
Off-state voltage, max	2V
Off-state current, max	4.1 mA
Input impedance, max	1.4 kΩ min 1.5 kΩ typical
Input current, nom	3.7 mA @ 5V DC
Input current, max	4.1 mA @ 5V DC
Cyclic update time	200 µs…750 ms
Change of state	Software configurable
Time stamp of inputs	±200 µs
Isolation voltage	250V (continuous), basic insulation type, inputs-to-backplane, and input group-to-group No isolation between individual group inputs
Module keying	Electronic, software configurable
Removable terminal block housing	1756-TBNH 1756-TBSH
RTB keying	User-defined mechanical
Slot width	1
Wire category	2(2)
Enclosure type	None (open-style)
North American temperature code	T5
IEC temperature code	T5
Reverse polarity protection	No

(1) TTL inputs are inverted (-0.2 to +0.8 = low voltage = True = On.) Use a NOT instruction in your program to convert to traditional True - High logic.

(2) Use this conductor category information for planning conductor routing as described in the system-level installation manual. See the Industrial Automation Wiring and Grounding Guidelines, publication 1770-4.1.

Environmental Specifications - 1756-IG16

Attribute	1756-IG16
Temperature, operating IEC 60068-2-1 (Test Ad, Operating Cold), IEC 60068-2-2 (Test Bd, Operating Dry Heat), IEC 60068-2-14 (Test Nb, Operating Thermal Shock)	0…60 °C (32…140 °F)
Temperature, surrounding air, max	60 °C (140 °F)
Temperature, nonoperating IEC 60068-2-1 (Test Ab, Unpackaged Nonoperating Cold), IEC 60068-2-2 (Test Bb, Unpackaged Nonoperating Dry Heat), IEC 60068-2-14 (Test N/A, Unpackaged Nonoperating Thermal Shock)	-40…+85 °C (-40…+185 °F)
Relative humidity IEC 60068-2-30 (Test dB, Unpackaged Damp Heat)	5…95% noncondensing
Vibration IEC 60068-2-6 (Test Fc, Operating)	2 g @ 10…500 Hz
Shock, operating IEC 60068-2-27 (Test Ea, Unpackaged Shock)	30 g
Shock, nonoperating IEC 60068-2-27 (Test Ea, Unpackaged Shock)	50 g
Emissions	IEC 61000-6-4
ESD immunity IEC 61000-4-2	6 kV contact discharges 8 kV air discharges
Radiated RF immunity IEC 61000-4-3	10V/m with 1 kHz sine-wave 80% AM from 80…2000 MHz 10V/m with 200 Hz 50% Pulse 100% AM @ 900 MHz 10V/m with 200 Hz 50% Pulse 100% AM @ 1890 MHz 3V/m with 1 kHz sine-wave 80% AM from 2000…2700 MHz
EFT/B immunity IEC 61000-4-4	±1 kV at 5 kHz on signal ports
Conducted RF immunity IEC 61000-4-6	10V rms with 1 kHz sine-wave 80% AM from 150 kHz…80 MHz

Certifications - 1756-IG16

Certification (when product is marked)(1)	1756-IG16
UL	UL Listed Industrial Control Equipment. See UL File E65584.
CSA	CSA Certified Process Control Equipment. See CSA File LR54689C. CSA Certified Process Control Equipment for Class I, Division 2 Group A,B,C,D Hazardous Locations. See CSA File LR69960C.
CE	European Union 2014/30/EU EMC Directive, compliant with: • EN 61326-1; Meas./Control/Lab., Industrial Requirements • EN 61000-6-2; Industrial Immunity • EN 61000-6-4; Industrial Emissions • EN 61131-2; Programmable Controllers (Clause 8, Zone A & B) European Union 2014/35/EU LVD, compliant with: EN 61131-2; Programmable Controllers (Clause 11)
RCM	Australian Radiocommunications Act, compliant with: EN 61000-6-4; Industrial Emissions
Ex	European Union 2014/34/EU ATEX Directive, compliant with: • EN 60079-15; Potentially Explosive Atmospheres, Protection "n" • EN 60079-0; General Requirements II 3 G Ex nA IIC T5 X Gc
KC	Korean Registration of Broadcasting and Communications Equipment, compliant with: Article 58-2 of Radio Waves Act, Clause 3
EAC	Russian Customs Union TR CU 020/2011 EMC Technical Regulation Russian Customs Union TR CU 004/2011 LV Technical Regulation

(1) See the Product Certification link at rok.auto/certifications for Declarations of Conformity, Certificates, and other certification details.

1756-IH16I

ControlLogix 125V DC isolated input module

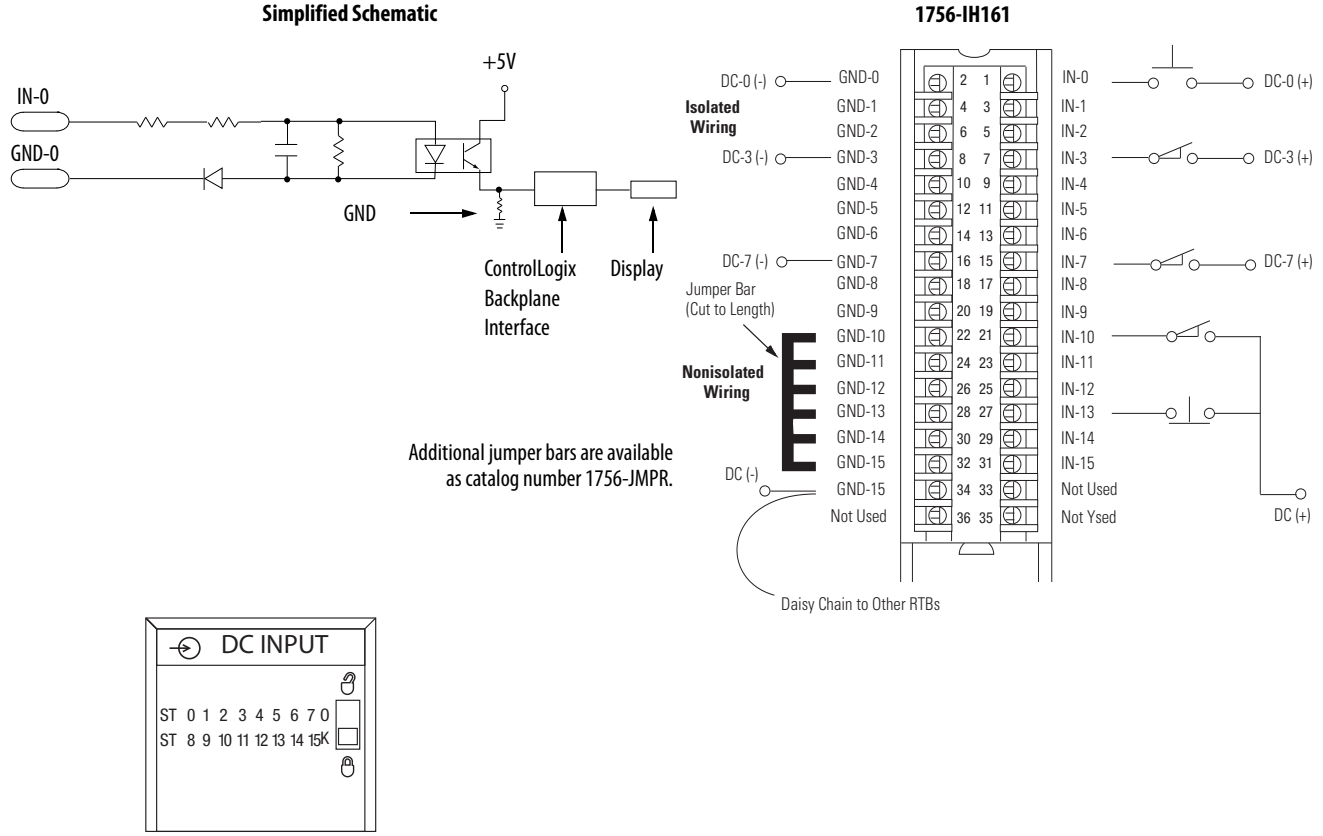

Technical Specifications - 1756-IH16I

Attribute	1756-IH16I
Inputs	16 individually isolated
Voltage category	125V DC sink/source
Operating voltage range	90…146V DC(1)
Input voltage, nom	125V DC
Input delay time (screw to backplane) Off to On On to Off	 Hardware delay: 2 ms max + filter time User-selectable filter time: 0 ms, 1 ms, or 2 ms Hardware delay: 6 max + filter time User-selectable filter time: 0 ms, 1 ms, 2 ms, 9 ms, or 18 ms
Current draw @ 5.1V	125 mA
Current draw @ 24V	3 mA
Total backplane power	0.71 W
Power dissipation, max	5 W @ 60 °C (140 °F)
Thermal dissipation	17.05 BTU/hr
Off-state voltage, max	20V DC

Technical Specifications - 1756-IH16I (continued)

Attribute	1756-IH16I
Off-state current, max	0.8 mA
On-state current, min	1 mA @ 90V DC
On-state current, max	3 mA @ 146V DC
On-state voltage Derated as follows	90…146V DC 90…146V DC @ 50 °C (122 °F), 12 Channels ON 90…132V DC @ 55 °C (131 °F), 14 Channels ON 90…125V DC @ 60 °C (140 °F), 16 Channels ON 90…146V DC @ 30 °C (86 °F), 16 Channels ON
Inrush current, max	250 mA
Input impedance, max	48.67 kΩ @ 146V DC
Cyclic update time	200 µs…750 ms
Change of state	Software configurable
Time stamp of inputs	±200 µs
Isolation voltage	250V (continuous), basic insulation type, inputs-to-backplane, and input-to-input
Module keying	Electronic, software configurable
Removable terminal block housing	1756-TBCH 1756-TBS6H
RTB keying	User-defined mechanical
Slot width	1
Wire category	1(2)
Enclosure type	None (open-style)
North American temperature code	T4
Reverse polarity protection	Yes

(1) UL certification for 125V nominal. Rockwell Automation specified to the following:
90…146V DC @ 50 °C (122 °F),12 channels on
90…132V DC @ 55 °C (131 °F), 14 channels on
90…125V DC @ 60 °C (140 °F), 16 channels on
90…146V DC @ 30 °C (86 °F), 16 channels on.

(2) Use this conductor category information for planning conductor routing as described in the system-level installation manual. See the Industrial Automation Wiring and Grounding Guidelines, publication 1770-4.1.

Environmental Specifications - 1756-IH16I

Attribute	1756-IH16I
Temperature, operating IEC 60068-2-1 (Test Ad, Operating Cold), IEC 60068-2-2 (Test Bd, Operating Dry Heat), IEC 60068-2-14 (Test Nb, Operating Thermal Shock)	0…60 °C (32…140 °F)
Temperature, surrounding air, max	60 °C (140 °F)
Temperature, nonoperating IEC 60068-2-1 (Test Ab, Unpackaged Nonoperating Cold), IEC 60068-2-2 (Test Bb, Unpackaged Nonoperating Dry Heat), IEC 60068-2-14 (Test N/A, Unpackaged Nonoperating Thermal Shock)	-40…+85 °C (-40…+185 °F)
Relative humidity IEC 60068-2-30 (Test dB, Unpackaged Damp Heat)	5…95% noncondensing
Vibration IEC 60068-2-6 (Test Fc, Operating)	2 g @ 10…500 Hz

Environmental Specifications - 1756-IH16I (continued)

Attribute	1756-IH16I
Shock, operating IEC 60068-2-27 (Test Ea, Unpackaged Shock)	30 g
Shock, nonoperating IEC 60068-2-27 (Test Ea, Unpackaged Shock)	50 g
Emissions	IEC 61000-6-4
ESD immunity IEC 61000-4-2	6 kV contact discharges 8 kV air discharges
Radiated RF immunity IEC 61000-4-3	10V/m with 1 kHz sine-wave 80% AM from 80…2000 MHz 10V/m with 200 Hz 50% Pulse 100% AM @ 900 MHz 10V/m with 200 Hz 50% Pulse 100% AM @ 1890 MHz 3V/m with 1 kHz sine-wave 80% AM from 2000…2700 MHz
EFT/B immunity IEC 61000-4-4	±4 kV at 5 kHz on signal ports
Surge transient immunity IEC 61000-4-5	±1 kV line-line (DM) and ±2 kV line-earth (CM) on signal ports
Conducted RF immunity IEC 61000-4-6	10V rms with 1 kHz sine-wave 80% AM from 150 kHz…80 MHz
Oscillatory surge withstand IEEE C37.90.1	3 kV

Certifications - 1756-IH16I

Certification (when product is marked)(1)	1756-IH16I
UL	UL Listed Industrial Control Equipment. See UL File E65584.
CSA	CSA Certified Process Control Equipment. See CSA File LR54689C. CSA Certified Process Control Equipment for Class I, Division 2 Group A,B,C,D Hazardous Locations. See CSA File LR69960C.
CE	European Union 2014/30/EU EMC Directive, compliant with: • EN 61326-1; Meas./Control/Lab., Industrial Requirements • EN 61000-6-2; Industrial Immunity • EN 61000-6-4; Industrial Emissions • EN 61131-2; Programmable Controllers (Clause 8, Zone A & B) European Union 2014/35/EU LVD, compliant with: EN 61131-2; Programmable Controllers (Clause 11)
RCM	Australian Radiocommunications Act, compliant with: EN 61000-6-4; Industrial Emissions
FM	FM Approved Equipment for use in Class I Division 2 Group A,B,C,D Hazardous Locations
KC	Korean Registration of Broadcasting and Communications Equipment, compliant with: Article 58-2 of Radio Waves Act, Clause 3
EAC	Russian Customs Union TR CU 020/2011 EMC Technical Regulation Russian Customs Union TR CU 004/2011 LV Technical Regulation

(1) See the Product Certification link at rok.auto/certifications for Declarations of Conformity, Certificates, and other certification details.

1756-IH16ISOE

ControlLogix DC (90...140V) sequence of events input module

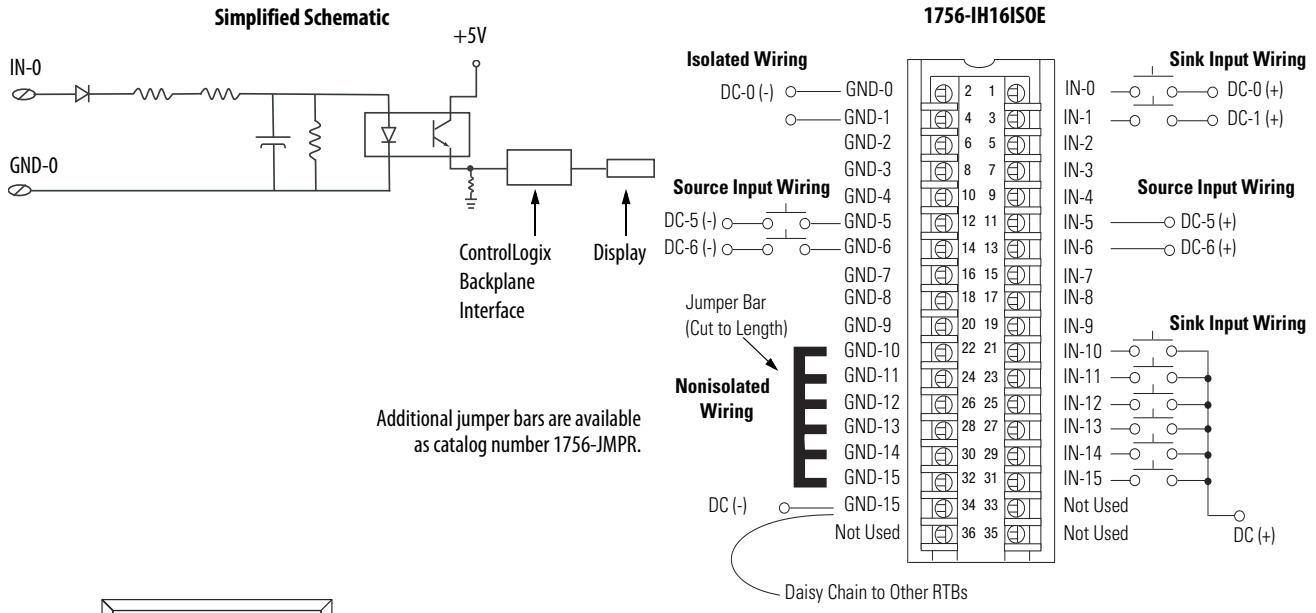

Technical Specifications - 1756-IH16ISOE

Attribute	1756-IH16ISOE
Inputs	16 individually isolated, sequence of events
Voltage category	125V DC sink/source
Operating voltage range	90…140V DC
Input voltage, nom	125V DC
Input delay time (screw to backplane) Off to On	Hardware delay: 10 µs nom/20 µs max + firmware scan: up to 25 µs + filter time: 0…50 ms + ASIC delay: 175 µs (FIFO) or 625 µs (Coordinated System Time per point)
On to Off	Hardware delay: 50 µs nom/75 µs max + firmware scan: up to 25 µs + filter time: 0…50 ms + ASIC delay: 175 µs (FIFO) or 625 µs (Coordinated System Time per point)
Current draw @ 5.1V	275 mA§
Current draw @ 24V	2 mA
Total backplane power	1.3 W
Power dissipation, max	5.5 W @ 60 °C (140 °F)

Technical Specifications - 1756-IH16ISOE (continued)

Attribute	1756-IH16ISOE
Thermal dissipation	17.22 BTU/hr
Off-state voltage, max	20V
Off-state current, max	0.3 mA
On-state current, min	1.15 mA @ 90V DC
On-state current, max	1.85 mA @ 140V DC
Input impedance, max	74.8 kΩ
Cyclic update time	200 µs…750 ms
Change of state	Software configurable
Time stamp of inputs	±100 µs
Isolation voltage	250V (continuous), basic insulation type, inputs-to-backplane, and input-to-input
Module keying	Electronic, software configurable
Removable terminal block	1756-TBCH 1756-TBS6H
RTB keying	User-defined mechanical
Slot width	1
Wire category	1(1)
Enclosure type	None (open-style)
North American temperature code	T3C
Reverse polarity protection	Yes

(1) Use this conductor category information for planning conductor routing as described in the system-level installation manual. See the Industrial Automation Wiring and Grounding Guidelines, publication 1770-4.1.

Environmental Specifications - 1756-IH16ISOE

Attribute	1756-IH16ISOE
Temperature, operating IEC 60068-2-1 (Test Ad, Operating Cold), IEC 60068-2-2 (Test Bd, Operating Dry Heat), IEC 60068-2-14 (Test Nb, Operating Thermal Shock)	0…60 °C (32…140 °F)
Temperature, surrounding air, max	60 °C (140 °F)
Temperature, nonoperating IEC 60068-2-1 (Test Ab, Unpackaged Nonoperating Cold), IEC 60068-2-2 (Test Bb, Unpackaged Nonoperating Dry Heat), IEC 60068-2-14 (Test N/A, Unpackaged Nonoperating Thermal Shock)	-40…+85 °C (-40…+185 °F)
Relative humidity IEC 60068-2-30 (Test dB, Unpackaged Damp Heat)	5…95% noncondensing
Vibration IEC 60068-2-6 (Test Fc, Operating)	2 g @ 10…500 Hz
Shock, operating IEC 60068-2-27 (Test Ea, Unpackaged Shock)	30 g
Shock, nonoperating IEC 60068-2-27 (Test Ea, Unpackaged Shock)	50 g
Emissions	IEC 61000-6-4
ESD immunity IEC 61000-4-2	6 kV contact discharges 8 kV air discharges

Environmental Specifications - 1756-IH16ISOE (continued)

Attribute	1756-IH16ISOE
Radiated RF immunity IEC 61000-4-3	10V/m with 1 kHz sine-wave 80% AM from 80…2000 MHz 10V/m with 200 Hz 50% Pulse 100% AM @ 900 MHz 10V/m with 200 Hz 50% Pulse 100% AM @ 1890 MHz 3V/m with 1 kHz sine-wave 80% AM from 2000…2700 MHz
EFT/B immunity IEC 61000-4-4	±4 kV at 5 kHz on signal ports
Surge transient immunity IEC 61000-4-5	±1 kV line-line (DM) and ±2 kV line-earth (CM) on signal ports
Conducted RF immunity IEC 61000-4-6	10V rms with 1 kHz sine-wave 80% AM from 150 kHz…80 MHz
Oscillatory surge withstand IEEE C37.90.1	3 kV

Certifications - 1756-IH16ISOE

Certification (when product is marked)[1]	1756-IH16ISOE
UL	UL Listed Industrial Control Equipment. See UL File E65584.
CSA	CSA Certified Process Control Equipment. See CSA File LR54689C. CSA Certified Process Control Equipment for Class I, Division 2 Group A,B,C,D Hazardous Locations. See CSA File LR69960C.
CE	European Union 2014/30/EU EMC Directive, compliant with: • EN 61326-1; Meas./Control/Lab., Industrial Requirements • EN 61000-6-2; Industrial Immunity • EN 61000-6-4; Industrial Emissions • EN 61131-2; Programmable Controllers (Clause 8, Zone A & B) European Union 2014/35/EU LVD, compliant with: EN 61131-2; Programmable Controllers (Clause 11)
RCM	Australian Radiocommunications Act, compliant with: EN 61000-6-4; Industrial Emissions
KC	Korean Registration of Broadcasting and Communications Equipment, compliant with: Article 58-2 of Radio Waves Act, Clause 3
EAC	Russian Customs Union TR CU 020/2011 EMC Technical Regulation Russian Customs Union TR CU 004/2011 LV Technical Regulation

(1) See the Product Certification link at rok.auto/certifications for Declarations of Conformity, Certificates, and other certification details.

1756-IM16I, 1756-IM16IK

ControlLogix 240V AC input module

Simplified Schematic

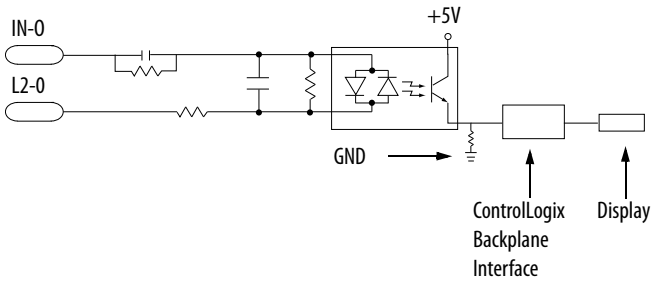

1756-IM161, 1756-IM16IK

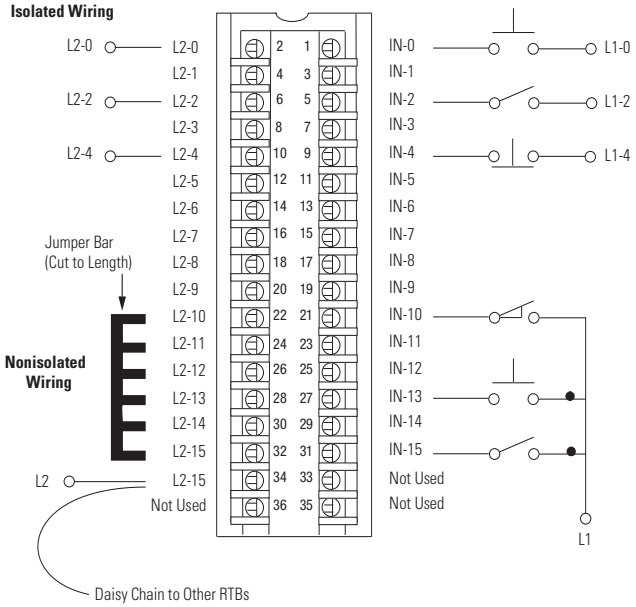

Additional jumper bars are available as catalog number 1756-JMPR.

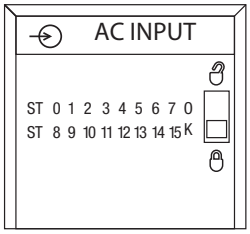

Technical Specifications - 1756-IM16I, 1756-IM16IK

Attribute	1756-IM16I, 1756-IM16IK
Inputs	16 individually isolated
Voltage category	240V AC 50/60 Hz
Operating voltage range	159…265V AC, 47…63 Hz(2)
Input voltage, nom	240V AC 50/60 Hz
Input delay time (screw to backplane) Off to On Onto Off	 Hardware delay: 10 ms max + filter time User-selectable filter time: 1 ms or 2 ms Hardware delay: 8 ms max + filter time User-selectable filter time: 9 ms or 18 ms
Current draw @ 5.1V	100 mA
Current draw @ 24V	3 mA
Total backplane power	0.58 W
Power dissipation, max	5.8 W @ 60 °C (140 °F)
Thermal dissipation	19.78 BTU/hr
Off-state voltage, max	40V

Technical Specifications - 1756-IM16I, 1756-IM16IK

Attribute	1756-IM16I, 1756-IM16IK
Off-state current, max	2.5 mA
On-state current, min	5 mA @ 159V AC, 60 Hz
On-state current, max	13 mA @ 265V AC, 60 Hz
On-state voltage	159…265V AC, 47…63Hz @ 30 °C (86 °F) all channels ON 159…265V AC, 47…63Hz @ 40 °C (104 °F) 8 points ON 159…253V AC, 47…63Hz @ 45 °C (113 °F) all channels ON 159…242V AC, 47…63Hz @ 60 °C (140 °F) all channels ON
Inrush current, max	250 mA
Input impedance, max	20.38 kΩ @ 265V AC, 60 Hz
Cyclic update time	200 µs…750 ms
Change of state	Software configurable
Time stamp of inputs	±200 µs
Isolation voltage	250V (continuous), basic insulation type, inputs-to-backplane, and input-to-input
Module keying	Electronic, software configurable
Removable terminal block housing	1756-TBCH 1756-TBS6H
RTB keying	User-defined mechanical
Slot width	1
Wire category(1)	1 - on signal ports 1 - on power ports
Enclosure type	None (open-style)
North American temperature code	T4

(1) Use this conductor category information for planning conductor routing as described in the system-level installation manual. See the Industrial Automation Wiring and Grounding Guidelines, publication 1770-4.1.

(2) UL certification for 240V 50/60 Hz nominal. Rockwell Automation specified to the following:
159…265V AC, 47…63Hz @ 30 °C (86 °F) all channels on
159…265V AC, 47…63Hz @ 40 °C (104 °F) 8 points on
159…253V AC, 47…63Hz @ 45 °C (113 °F) all channels on
159…242V AC, 47…63Hz @ 60 °C (140 °F) all channels on.

Environmental Specifications - 1756-IM16I, 1756-IM16IK

Attribute	1756-IM16I, 1756-IM16IK
Temperature, operating IEC 60068-2-1 (Test Ad, Operating Cold), IEC 60068-2-2 (Test Bd, Operating Dry Heat), IEC 60068-2-14 (Test Nb, Operating Thermal Shock)	0…60 °C (32…140 °F)
Temperature, surrounding air, max	60 °C (140 °F)
Temperature, nonoperating IEC 60068-2-1 (Test Ab, Unpackaged Nonoperating Cold), IEC 60068-2-2 (Test Bb, Unpackaged Nonoperating Dry Heat), IEC 60068-2-14 (Test N/A, Unpackaged Nonoperating Thermal Shock)	-40…+85 °C (-40…+185 °F)
Relative humidity IEC 60068-2-30 (Test dB, Unpackaged Damp Heat)	5…95% noncondensing
Vibration IEC 60068-2-6 (Test Fc, Operating)	2 g @ 10…500 Hz

Environmental Specifications - 1756-IM16I, 1756-IM16IK

Attribute	1756-IM16I, 1756-IM16IK
Shock, operating IEC 60068-2-27 (Test Ea, Unpackaged Shock)	30 g
Shock, nonoperating IEC 60068-2-27 (Test Ea, Unpackaged Shock)	50 g
Emissions	IEC 61000-6-4
ESD immunity IEC 61000-4-2	6 kV contact discharges 8 kV air discharges
Radiated RF immunity IEC 61000-4-3	10V/m with 1 kHz sine-wave 80% AM from 30 MHz to 1000 MHz 10V/m with 200 Hz 50% Pulse 100% AM at 900 MHz
EFT/B immunity IEC 61000-4-4	±4 kV at 5 kHz on signal ports
Surge transient immunity IEC 61000-4-5	±1 kV line-line (DM) and ±2 kV line-earth (CM) on signal ports
Conducted RF immunity IEC 61000-4-6	10V rms with 1 kHz sine-wave 80% AM from 150 kHz...80 MHz

Certifications - 1756-IM16I, 1756-IM16IK

Certification (when product is marked)(1)	1756-IM16I, 1756-IM16IK
UL	UL Listed Industrial Control Equipment. See UL File E65584.
CSA	CSA Certified Process Control Equipment. See CSA File LR54689C. CSA Certified Process Control Equipment for Class I, Division 2 Group A,B,C,D Hazardous Locations. See CSA File LR69960C.
CE	European Union 89/336/EEC EMC Directive, compliant with: • EN 61131-2; Programmable Controllers (Clause 8, Zone A & B) • EN 61326-1; Meas./Control/Lab., Industrial Requirements • EN 61000-6-2; Industrial Immunity • EN 61000-6-4; Industrial Emissions European Union 2014/35/EU LVD Directive, compliant with: • EN 61131-2; Programmable Controllers (Clause 11)
RCM	Australian Radiocommunications Act, compliant with: EN 61000-6-4; Industrial Emissions
FM	FM Approved Equipment for use in Class I Division 2 Group A,B,C,D Hazardous Locations
KC	Korean Registration of Broadcasting and Communications Equipment, compliant with: Article 58-2 of Radio Waves Act, Clause 3
EAC	Russian Customs Union TR CU 020/2011 EMC Technical Regulation Russian Customs Union TR CU 004/2011 LV Technical Regulation

(1) See the Product Certification link at rok.auto/certifications for Declarations of Conformity, Certificates, and other certification details.

1756-IN16

ControlLogix AC (10...30V) input module

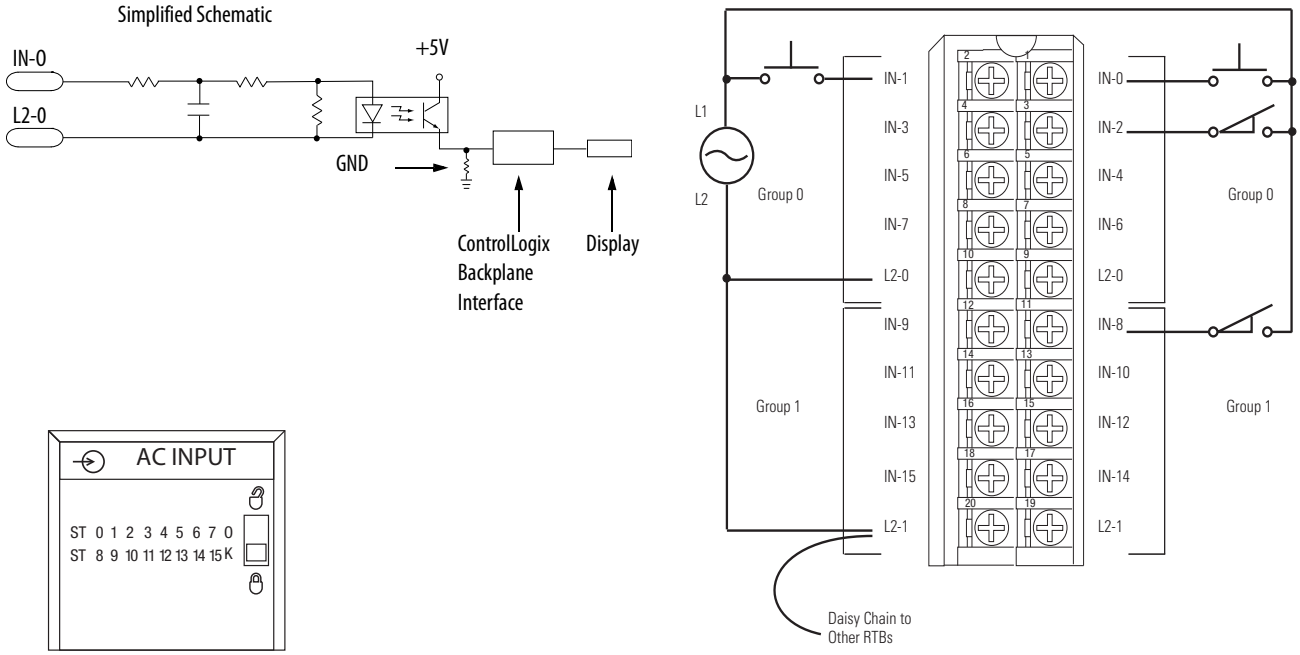

Technical Specifications - 1756-IN16

Attribute	1756-IN16
Inputs	16 (8 points/group)
Voltage category	24V AC 50/60 Hz
Operating voltage range	10…30V AC, 47…63 Hz
Input voltage, nom	24V AC 50/60 Hz
Voltage and current ratings	Backplane: 5.1V DC, 135 mA 24V DC, 2 mA Inputs: 10...30V AC, 50/60Hz 25 mA max
Input delay time (screw to backplane) Off to On On to Off	 Hardware delay: 10 ms max + filter time User-selectable filter time: 0 ms, 1 ms, or 2 ms Hardware delay: 10 ms max + filter time User-selectable filter time: 9 ms or 18 ms
Current draw @ 5.1V	135 mA
Current draw @ 24V	2 mA
Total backplane power	0.56 W
Power dissipation, max	5.1 W @ 60 °C (140 °F)
Thermal dissipation	17.39 BTU/hr
Off-state voltage, max	5V

Technical Specifications - 1756-IN16 (continued)

Attribute	1756-IN16
Off-state current, max	2.75 mA
On-state current, min	5 mA @ 10V AC, 60 Hz
On-state current, max	1.2 mA @ 30V AC, 60 Hz
Inrush current, max	250 mA
Input impedance, max	2.5 kΩ @ 30V AC, 60 Hz
Cyclic update time	200 µs…750 ms
Change of state	Software configurable
Time stamp of inputs	±200 µs
Isolation voltage	250V (continuous), basic insulation type, inputs-to-backplane, and input group-to-group No isolation between individual group inputs
Module keying	Electronic, software configurable
Removable terminal block housing	1756-TBNH 1756-TBSH
RTB keying	User-defined mechanical
Wire Size	1756-TBNH Single wire connection: 0.33…2.1 mm2 (22…14 AWG) solid or stranded shielded copper wire rated at 105 °C (221 °F), or greater, 1.2 mm (3/64 in.) insulation max. Double wire connection: 0.33…1.3 mm2 (22…16 AWG) solid or stranded copper wire rated at 105 °C (221 °F), or greater, 1.2 mm (3/64 in.) insulation max. 1756-TBSH Single wire connection: 0.33…2.1 mm2 (22…14 AWG) solid or stranded shielded copper wire rated at 105 °C (221 °F), or greater, 1.2 mm (3/64 in.) insulation max.
Terminal block torque specs	1756-TBNH 1.36 N•m (12 lb·in)
Slot width	1
Wire category(1)	1 - on signal ports
Enclosure type	None (open-style)
North American temperature code	T3C
ATEX	T3
IECEx temperature code	T3

(1) Use this conductor category information for planning conductor routing as described in the system-level installation manual. See the Industrial Automation Wiring and Grounding Guidelines, publication 1770-4.1.

Environmental Specifications - 1756-IN16

Attribute	1756-IN16
Temperature, operating IEC 60068-2-1 (Test Ad, Operating Cold), IEC 60068-2-2 (Test Bd, Operating Dry Heat), IEC 60068-2-14 (Test Nb, Operating Thermal Shock)	0 °C < Ta < 60 °C (32 °F < Ta < 140 °F)
Temperature, surrounding air, max	60 °C (140 °F)
Temperature, nonoperating IEC 60068-2-1 (Test Ab, Unpackaged Nonoperating Cold), IEC 60068-2-2 (Test Bb, Unpackaged Nonoperating Dry Heat), IEC 60068-2-14 (Test N/A, Unpackaged Nonoperating Thermal Shock)	-40…+85 °C (-40…+185 °F)
Relative humidity IEC 60068-2-30 (Test dB, Unpackaged Damp Heat)	5…95% noncondensing

Environmental Specifications - 1756-IN16 (continued)

Attribute	1756-IN16
Vibration IEC 60068-2-6 (Test Fc, Operating)	2 g @ 10…500 Hz
Shock, operating IEC 60068-2-27 (Test Ea, Unpackaged Shock)	30 g
Shock, nonoperating IEC 60068-2-27 (Test Ea, Unpackaged Shock)	30 g
Emissions	IEC 61000-6-4
ESD immunity IEC 61000-4-2	6 kV contact discharges 8 kV air discharges
Radiated RF immunity IEC 61000-4-3	10V/m with 1 kHz sine-wave 80% AM from 80…2000 MHz 10V/m with 200 Hz 50% Pulse 100% AM @ 900 MHz 10V/m with 200 Hz 50% Pulse 100% AM @ 1890 MHz 3V/m with 1 kHz sine-wave 80% AM from 2000…2700 MHz
EFT/B immunity IEC 61000-4-4	±4 kV at 5 kHz on signal ports
Conducted RF immunity IEC 61000-4-6	10V rms with 1 kHz sine-wave 80% AM from 150 kHz…80 MHz

Certifications - 1756-IN16

Certification (when product is marked)(1)	1756-IN16
UL	UL Listed Industrial Control Equipment. See UL File E65584.
CSA	CSA Certified Process Control Equipment. See CSA File LR54689C. CSA Certified Process Control Equipment for Class I, Division 2 Group A,B,C,D Hazardous Locations. See CSA File LR69960C.
CE	European Union 2014/30/EU EMC Directive, compliant with: • EN 61326-1; Meas./Control/Lab., Industrial Requirements • EN 61000-6-2; Industrial Immunity • EN 61000-6-4; Industrial Emissions • EN 61131-2; Programmable Controllers (Clause 8, Zone A & B) European Union 2014/35/EU LVD, compliant with: EN 61131-2; Programmable Controllers (Clause 11)
RCM	Australian Radiocommunications Act, compliant with: EN 61000-6-4; Industrial Emissions
Ex	European Union 2014/34/EU ATEX Directive, compliant with: • EN 60079-0; General Requirements • EN 60079-15; Potentially Explosive Atmospheres, Protection "n" • II 3 G Ex nA IIC T3 Gc • DEMKO16ATEX1792X
IECEx	IECEx System, compliant with: • IEC 60079-0; General Requirements • IEC 60079-15; Potentially Explosive Atmospheres, Protection "n" • II 3 G Ex nA IIC T3 Gc • IECExUL16.0151X
KC	Korean Registration of Broadcasting and Communications Equipment, compliant with: Article 58-2 of Radio Waves Act, Clause 3
EAC	Russian Customs Union TR CU 020/2011 EMC Technical Regulation Russian Customs Union TR CU 004/2011 LV Technical Regulation
FM	FM Approved Equipment for use in Class I Division 2 Group A,B,C,D Hazardous Locations

(1) See the Product Certification link at rok.auto/certifications for Declarations of Conformity, Certificates, and other certification details.

1756-IR6I

ControlLogix temperature sensing analog input module

1756-IR6I 3-wire RTD

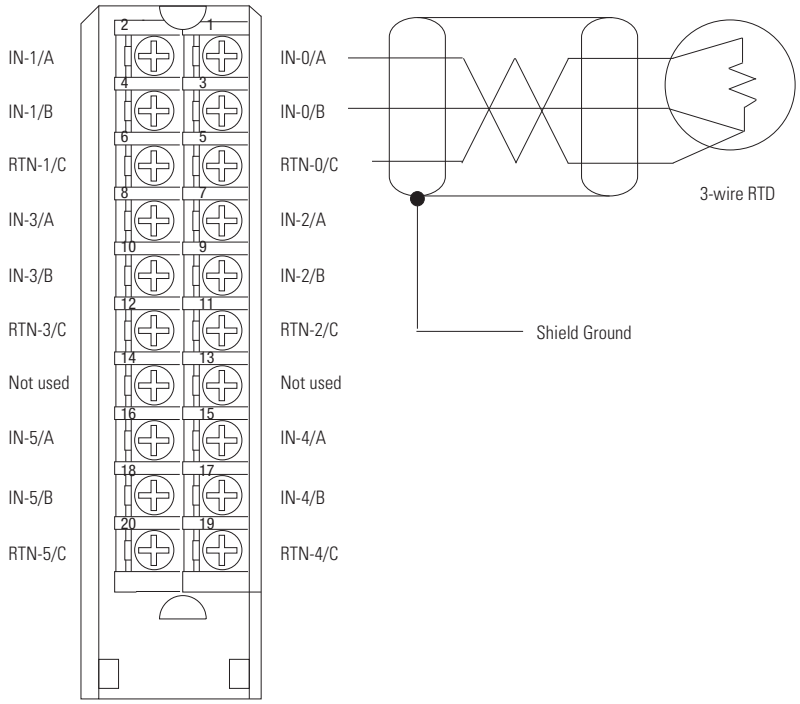

IMPORTANT: For 2-wire resistor applications including calibration, make sure IN-*x*/B and RTN-*x*/C are shorted together as shown.

1756-IR6I 4-wire RTD

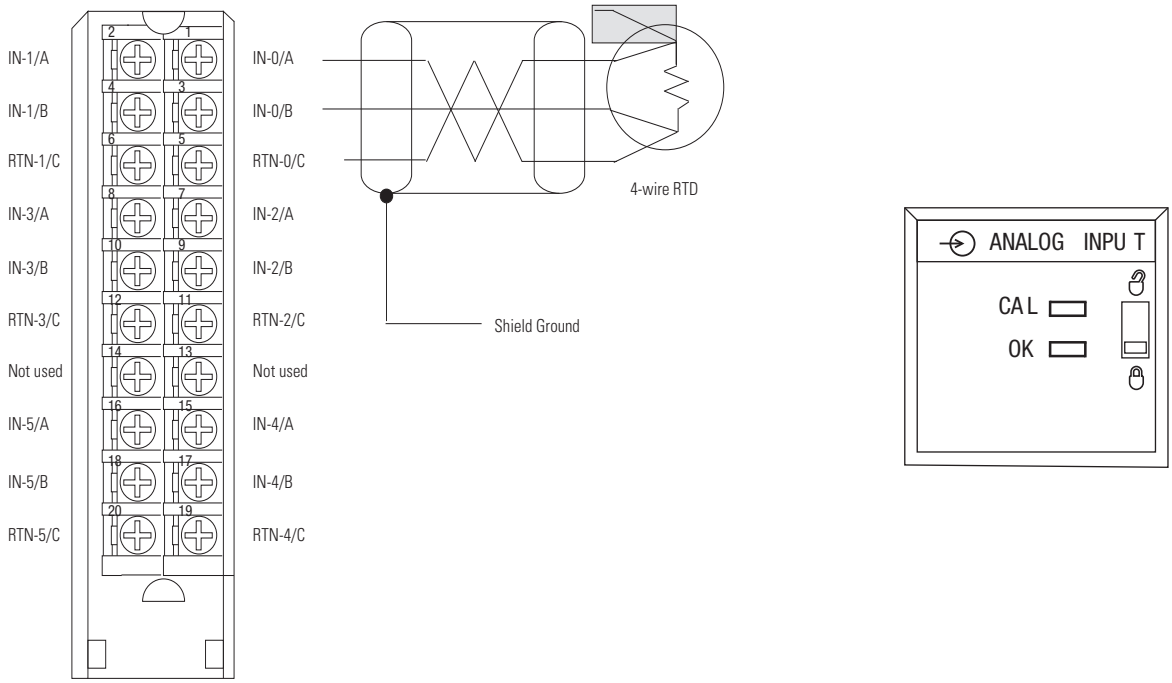

Signal and User Counts - 1756-IR6I

Range	Low Signal and User Counts	High Signal and User Counts
1…487 Ω	0.859068653 Ω -32768 counts	507.862 Ω 32767 counts
2…1000 Ω	2 Ω -32768 counts	1016.502 Ω 32767 counts
4…2000 Ω	4 Ω -32768 counts	2033.780 Ω 32767 counts
8…4020 Ω	8 Ω -32768 counts	4068.392 Ω 32767 counts

Technical Specifications - 1756-IR6I

Attribute	1756-IR6I
Inputs	6 individually isolated RTD
Input range	1…487 Ω 2…1000 Ω 4…2000 Ω 8…4000 Ω
Resolution	16 bits 1…487 Ω: 7.7 mΩ/bit 2…1000 Ω:15 mΩ/bit 4…2000 Ω:30 mΩ/bit 8…4020 Ω:60 mΩ/bit

Technical Specifications - 1756-IR6I (continued)

Attribute	1756-IR6I
Sensors supported	100, 200, 500, 1000 Ω Platinum, alpha=385 100, 200, 500, 1000 Ω Platinum, alpha=3916 120 Ω Nickel, alpha=672 100, 120, 200, 500 Ω Nickel, alpha=618 10 Ω Copper
Current draw @ 5.1V	250 mA
Current draw @ 24V	125 mA
Total backplane power	4.25 W
Power dissipation, max	4.3 W
Thermal dissipation	14.66 BTU/hr
Open circuit detection time	Negative full scale reading within 5 s with any combination of lost wires, except input terminal A alone. If input terminal A is lost by itself, the module reads a positive full scale reading within 5 s
Overvoltage protection, max	24V AC/DC
Normal mode noise rejection	60 dB at 60 Hz(2)
Common mode noise rejection	120 dB @ 60 Hz 100 dB @ 50 Hz
Channel bandwidth	15 Hz(2)
Settling time	<80 ms to 5% of full scale(2)
Calibrated accuracy @ 25 °C	Better than 0.1% of range
Calibration interval	6 months
Offset drift	10 MΩ/°C
Gain drift with temperature, nom	50 ppm/°C
Gain drift with temperature, max	90 ppm/°C
Module error	0.54% of range
Module scan time	25 ms min floating point (ohms) 50 ms min floating point (temperature) 10 ms min integer (ohms)(2)
Data format	Integer mode (left justified, 2 s complement) IEEE 32-bit floating point
Module conversion method	Sigma-Delta
Isolation voltage	250V (continuous), basic insulation type, input channels-to-backplane, and input channel-to-channel
Module keying	Electronic, software configurable
Removable terminal block	1756-TBNH 1756-TBSH
RTB keying	User-defined mechanical
Slot width	1
Wire category(1)	2
Enclosure type	None (open-style)
North American temperature code	T4A
IEC temperature code	T4

(1) Use this conductor category information for planning conductor routing as described in the system-level installation manual. See the Industrial Automation Wiring and Grounding Guidelines, publication 1770-4.1.

(2) Notch filter dependent.

Environmental Specifications - 1756-IR6I

Attribute	1756-IR6I
Temperature, operating IEC 60068-2-1 (Test Ad, Operating Cold), IEC 60068-2-2 (Test Bd, Operating Dry Heat), IEC 60068-2-14 (Test Nb, Operating Thermal Shock)	0…60 °C (32…140 °F)
Temperature, surrounding air, max	60 °C (140 °F)
Temperature, nonoperating IEC 60068-2-1 (Test Ab, Unpackaged Nonoperating Cold), IEC 60068-2-2 (Test Bb, Unpackaged Nonoperating Dry Heat), IEC 60068-2-14 (Test N/A, Unpackaged Nonoperating Thermal Shock)	-40…+85 °C (-40…+185 °F)
Relative humidity IEC 60068-2-30 (Test dB, Unpackaged Damp Heat)	5…95% noncondensing
Vibration IEC 60068-2-6 (Test Fc, Operating)	2 g @ 10…500 Hz
Shock, operating IEC 60068-2-27 (Test Ea, Unpackaged Shock)	30 g
Shock, nonoperating IEC 60068-2-27 (Test Ea, Unpackaged Shock)	50 g
Emissions	IEC 61000-6-4
ESD immunity IEC 61000-4-2	6 kV contact discharges 8 kV air discharges
Radiated RF immunity IEC 61000-4-3	10V/m with 1 kHz sine-wave 80% AM from 80…2000 MHz 10V/m with 200 Hz 50% Pulse 100% AM @ 900 MHz 10V/m with 200 Hz 50% Pulse 100% AM @ 1890 MHz 3V/m with 1 kHz sine-wave 80% AM from 2000…2700 MHz
EFT/B immunity IEC 61000-4-4	±2 kV at 5 kHz on shielded signal ports
Surge transient immunity IEC 61000-4-5	±2 kV line-earth (CM) on shielded signal ports
Conducted RF immunity IEC 61000-4-6	10V rms with 1 kHz sine-wave 80% AM from 150 kHz…80 MHz on shielded signal ports

Certifications - 1756-IR6I

Certification (when product is marked)[1]	1756-IR6I
UL	UL Listed Industrial Control Equipment. See UL File E65584.
CSA	CSA Certified Process Control Equipment. See CSA File LR54689C. CSA Certified Process Control Equipment for Class I, Division 2 Group A,B,C,D Hazardous Locations. See CSA File LR69960C.
CE	European Union 2014/30/EU EMC Directive, compliant with: • EN 61326-1; Meas./Control/Lab., Industrial Requirements • EN 61000-6-2; Industrial Immunity • EN 61000-6-4; Industrial Emissions • EN 61131-2; Programmable Controllers (Clause 8, Zone A & B) European Union 2014/35/EU LVD, compliant with: EN 61131-2; Programmable Controllers (Clause 11)
RCM	Australian Radiocommunications Act, compliant with: EN 61000-6-4; Industrial Emissions
Ex	European Union 2014/34/EU ATEX Directive, compliant with: • EN 60079-15; Potentially Explosive Atmospheres, Protection "n" • EN 60079-0; General Requirements II 3 G Ex nA IIC T4 X Gc
FM	FM Approved Equipment for use in Class I Division 2 Group A,B,C,D Hazardous Locations
KC	Korean Registration of Broadcasting and Communications Equipment, compliant with: Article 58-2 of Radio Waves Act, Clause 3
EAC	Russian Customs Union TR CU 020/2011 EMC Technical Regulation Russian Customs Union TR CU 004/2011 LV Technical Regulation

(1) See the Product Certification link at rok.auto/certifications for Declarations of Conformity, Certificates, and other certification details.

1756-IRT8I, 1756-IRT8IK

ControlLogix isolated RTD/Thermocouple analog input module.

1756-IRT8I, 1756-IRT8IK Module Wiring Diagram - 3-wire RTD Input

IMPORTANT: Remember the following:

- If separate power sources are used, do not exceed the specific isolation voltage as listed in the specifications.
- Terminals 1, 2, 35, and 36 are not used in RTD applications.
- For 2-wire resistor applications including calibration, make sure IN_x(-)/B and IN_x/RTD C are shorted together.

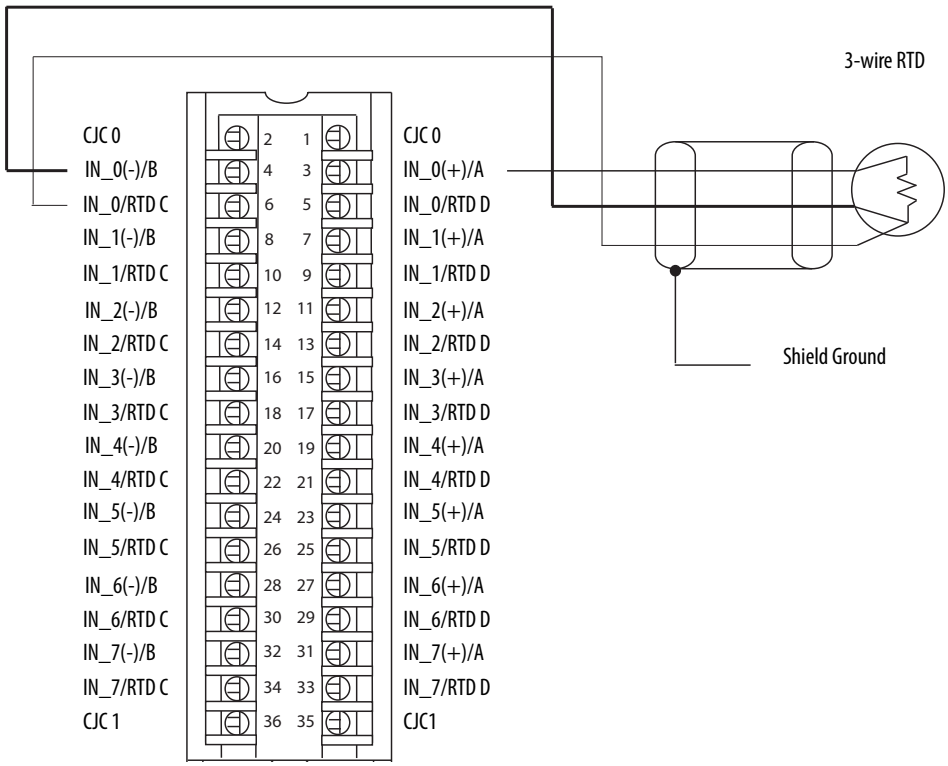

1756-IRT8I, 1756-IRT8IK Module Wiring Diagram - 4-wire RTD Input

IMPORTANT: Remember the following:

- If separate power sources are used, do not exceed the specific isolation voltage as listed in the specifications.
- Terminals 1, 2, 35, and 36 are not used in RTD applications.

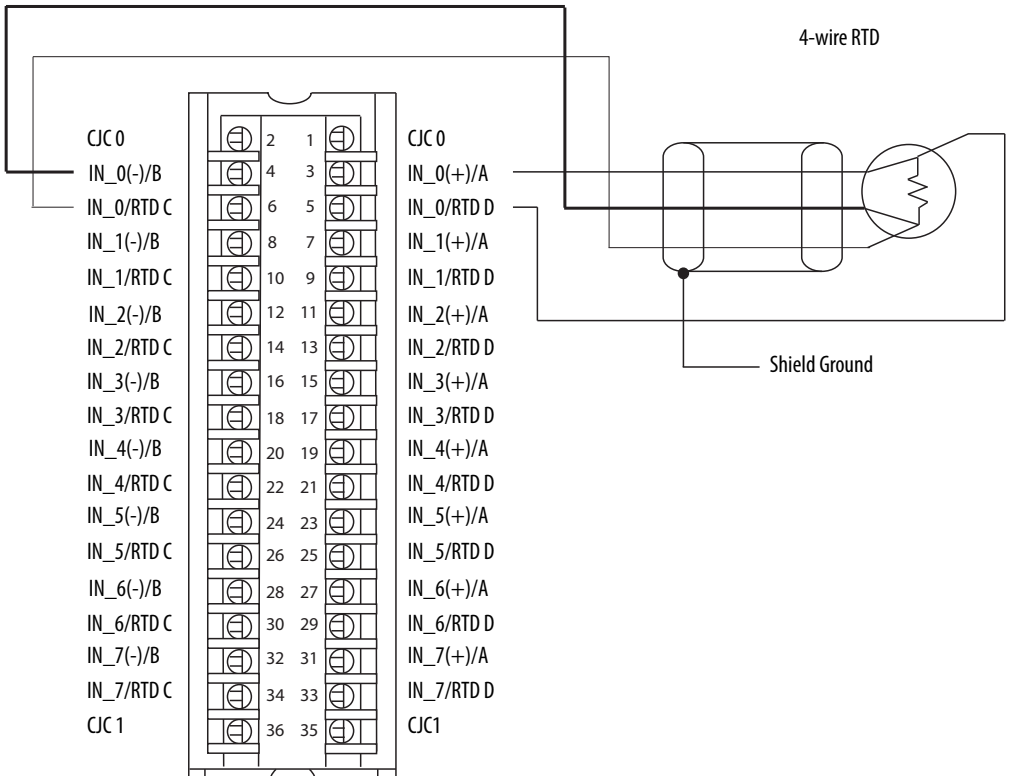

1756-IRT8I, 1756-IRT8IK Module Wiring Diagram - Thermocouple Input

IMPORTANT: Remember the following:

- Connect the white end of the CJC sensor to the even-numbered terminal. Connect the orange end of the CJC sensor to the odd-numbered terminals.

For CJC 0:

– White end - Connected to terminal number 2

– Orange end - Connected to terminal number 1

For CJC 1:

–White end - Connected to terminal number 36

–Orange end - Connected to terminal number 35

- CJC sensors do not come with the module. You must order the sensors, product catalog number 1756-CJC, separately.
- If separate power sources are used, do not exceed the specific isolation voltage as listed in the specifications.

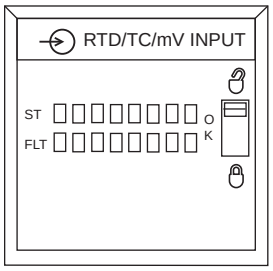

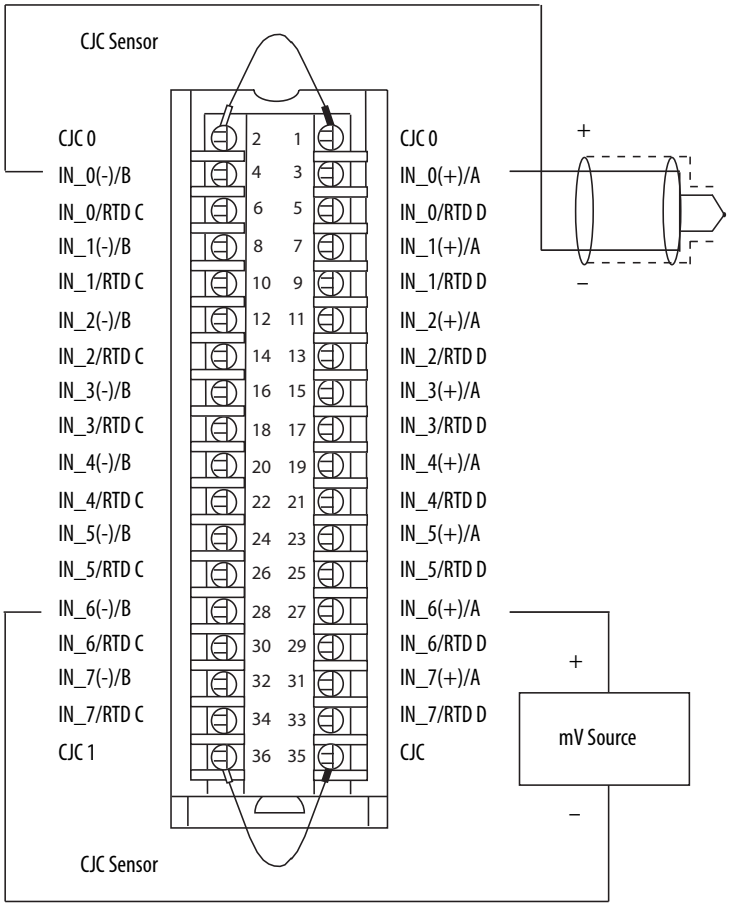

Technical Specifications - 1756-IRT8I, 1756-IRT8IK

Attribute	1756-IRT8I, 1756-IRT8IK
Inputs	Eight isolated channels - Any combination of RTD or Thermocouple mode Two CJC sensors for Thermocouple use. The CJC sensors, product catalog number 1756-CJC, do not come with the module. You must order the sensors separately.
Input range	1…500 Ω 2…1000 Ω 4…2000 Ω 8…4000 Ω -100…100 mV
Resolution	24 bits 0…510 Ω: 0.06 mΩ/count 0…1020 Ω: 0.12 mΩ/count 0…2040 Ω: 0.25 mΩ/count 0…4080 Ω: 0.50 mΩ/count -101…101 mV: 0.01 µV/count
RTD sensors supported	100, 200, 500, 1000 Ω Platinum, alpha=385 100, 200, 500, 1000 Ω Platinum, alpha=3916 120 Ω Nickel, alpha=672 100, 120, 200, 500 Ω Nickel, alpha=618 10 Ω Copper, alpha=427

Technical Specifications - 1756-IRT8I, 1756-IRT8IK

Attribute	1756-IRT8I, 1756-IRT8IK
Thermocouple types	B, C, D, E, J, K, N, R, S, T, TXK/XK (L)
Thermocouple linearization	ITS-90
Current draw @ 5.1V	200 mA
Current draw @ 24V	150 mA
Total backplane power	4.6 W
Voltage and current ratings	Backplane: 5.1V DC, 200 mA, 24V DC,150 mA Input: 1-4000 Ohms, +/-100 mV, Thermocouple; B,C,E,J,K,R,S,T,N,D,L
Power dissipation	4.6 W (15.7 BTU/hr) max
Thermal dissipation	15.7 BTU/hr
RTD excitation current	600 µA
Input impedance, approx	1 GΩ
Open circuit detection time	• Thermocouple input and 3-wire RTD input = 2 s • 4-wire RTD input = 5 s **IMPORTANT**: **No Open Circuit Detection** when wires are simultaneously disconnected from the IN_*x*/RTD C and IN_*x*/RTD D terminals on same channel; where *x* represents the channel number.
Overvoltage protection, max	±30V DC
Normal mode noise rejection	75 dB at 60 Hz(2)
Common mode noise rejection	125 dB @ 60 Hz 1000 Ω differential 120 dB @ 50 Hz 1000 Ω differential 160 dB @ 600V 100 Ω differential
Channel bandwidth	Notch filter configuration dependent See publication 1756-UM540 for possible values.
Settling time	Notch filter configuration dependent See publication 1756-UM540 for possible values.
Calibrated accuracy @ 25 °C	0.05%
Module error over full temperature range	0.1%
Local CJC sensor accuracy	± 0.3 °C
Remote CJC sensor, accuracy	± 0.3 °C
Module input scan time, min	1 ms
Data format	IEEE 32-bit floating point
Module conversion method	Sigma-Delta
Isolation voltage	250V (continuous), reinforced insulation type, inputs to backplane. 250V (continuous), basic insulation type, input to input.
RTD sensor types/temperature range (Each sensor type in a cell supports all temperature ranges in the corresponding column to the right.)	
100 Ω PT 385 20 Ω PT 385 500 Ω PT 385 1000 Ω PT 385	-200…+870 °C (-328…+1598 °F) 73…1143 °K 132…2058 °R
100 Ω PT 3916 20 Ω PT 3916 500 Ω PT 3916 1000 Ω PT 3916	-200…+630 °C (-328…+1166 °F) 73…903 °K 132…1626 °R

Technical Specifications - 1756-IRT8I, 1756-IRT8IK

Attribute	1756-IRT8I, 1756-IRT8IK
10 Ω CU 427	-200…+260 °C (-328…+500 °F) 73…533 °K 132…960 °R
120 Ω NI 672	-80…+320 °C (-112…+608 °F) 193…593 °K 348…1068 °R
100 Ω NI 618 120 Ω NI 618 200 Ω NI 618 500 Ω NI 618	-60…+250 °C (-76…+482 °F) 213…523 °K 384…942 °R
Thermocouple type/temperature range	
Thermocouple Type B	21…1820 °C (68…3308 °F) 293…2093 °K 528…3768 °R
Thermocouple Type C	0…2320 °C (32…4208 °F) 273…2593 °K 492…4668 °R
Thermocouple Type D	0…2320 °C (32…4208 °F) 273…2593 °K 492…4668 °R
Thermocouple Type E	-270…+1000 °C (-454…+1832 °F) 3…1273 °K 6…2292 °R
Thermocouple Type J	-210…+1200 °C (-346…+2192 °F) 63…1473 °K 114…2652 °R
Thermocouple Type K	-270…+1372 °C (-454…+2502 °F) 3…1645 °K 6…2961 °R
Thermocouple Type N	-270…+1300 °C (-454…+2372 °F) 3…1573 °K 6…2832 °R
Thermocouple Type R	-50…+1768 °C (-58…+3215 °F) 223…2041 °K 402…3674 °R
Thermocouple Type S	-50…+1768 °C (-58…+3215 °F) 223…2041 °K 402…3674 °R
Thermocouple Type T	-270…+400 °C (-454…+752 °F) 3…673 °K 6…1212 °R
Thermocouple Type TXK/XK (L)	-200…+800 °C (-328…+1472 °F) 73…1073 °K 132…1932 °R
Thermocouple type/resolution, nom	
Type C, R	~0.03 °C (~0.05 °F)
Type B, S	~0.04 °C (~0.07 °F)

Technical Specifications - 1756-IRT8I, 1756-IRT8IK

Attribute	1756-IRT8I, 1756-IRT8IK
Type E, J, K, N, T, TXK/XK (L)	~0.01 °C (~0.02 °F)
Type D	~0.02 °C (~0.04 °F)
Module keying	Electronic, software configurable
Removable terminal block	1756-TBCH 1756-TBS6H
RTB keying	User-defined mechanical
Slot width	1
Wire size	0.33…2.1 mm^2 (22…14 AWG) solid or stranded shielded copper wire, rated at 90 °C (194 °F) or greater, 1.2 mm (3/64 in.) insulation max
Wire category(1)	2 - on signal ports
Enclosure type	None (open-style)
North American temperature code	T4A
ATEX temperature code	T4
IECEx temperature code	T4

(1) Use this conductor category information for planning conductor routing as described in the system-level installation manual. See the Industrial Automation Wiring and Grounding Guidelines, publication 1770-4.1.

(2) Notch filter dependent.

Environmental Specifications - 1756-IRT8I, 1756-IRT8IK

Attribute	1756-IRT8I, 1756-IRT8IK
Temperature, operating IEC 60068-2-1 (Test Ad, Operating Cold), IEC 60068-2-2 (Test Bd, Operating Dry Heat), IEC 60068-2-14 (Test Nb, Operating Thermal Shock)	0…60 °C (32…140 °F)
Temperature, surrounding air, max	60 °C (140 °F)
Temperature, nonoperating IEC 60068-2-1 (Test Ab, Unpackaged Nonoperating Cold), IEC 60068-2-2 (Test Bb, Unpackaged Nonoperating Dry Heat), IEC 60068-2-14 (Test N/A, Unpackaged Nonoperating Thermal Shock)	-40…+85 °C (-40…+185 °F)
Relative humidity IEC 60068-2-30 (Test dB, Unpackaged Damp Heat)	5…95% noncondensing
Vibration IEC 60068-2-6 (Test Fc, Operating)	2 g @ 10…500 Hz
Shock, operating IEC 60068-2-27 (Test Ea, Unpackaged Shock)	30 g
Shock, nonoperating IEC 60068-2-27 (Test Ea, Unpackaged Shock)	50 g
Emissions	IEC 61000-6-4
ESD immunity IEC 61000-4-2	6 kV contact discharges 8 kV air discharges
Radiated RF immunity IEC 61000-4-3	10V/m with 1 kHz sine-wave 80% AM from 80…2000 MHz 10V/m with 200 Hz 50% Pulse 100% AM @ 900 MHz 10V/m with 200 Hz 50% Pulse 100% AM @ 1890 MHz 3V/m with 1 kHz sine-wave 80% AM from 2000…2700 MHz

Environmental Specifications - 1756-IRT8I, 1756-IRT8IK

Attribute	1756-IRT8I, 1756-IRT8IK
EFT/B immunity IEC 61000-4-4	±4 kV at 5 kHz on shielded signal ports
Surge transient immunity IEC 61000-4-5	±2 kV line-earth (CM) on shielded signal ports
Conducted RF immunity IEC 61000-4-6	10V rms with 1 kHz sine-wave 80% AM from 150 kHz…80 MHz

Certifications - 1756-IRT8I, 1756-IRT8IK

Certification (when product is marked)(1)	1756-IRT8I, 1756-IRT8IK
c-UL-us	UL Listed Industrial Control Equipment, certified for US and Canada. See UL File E65584. UL Listed for Class I, Division 2 Group A,B,C,D Hazardous Locations, certified for U.S. and Canada. See UL File E194810.
CE	European Union 2014/30/EU EMC Directive, compliant with: • EN 61326-1; Meas./Control/Lab., Industrial Requirements • EN 61000-6-2; Industrial Immunity • EN 61000-6-4; Industrial Emissions • EN 61131-2; Programmable Controllers (Clause 8, Zone A & B) European Union 2014/35/EU LVD, compliant with: EN 61131-2; Programmable Controllers (Clause 11)
RCM	Australian Radiocommunications Act, compliant with: EN 61000-6-4; Industrial Emissions
Ex	European Union 2014/34/EU ATEX Directive, compliant with: • EN 60079-15; Potentially Explosive Atmospheres, Protection "n" • EN 60079-0; General Requirements • II 3 G Ex nA IIC T4 Gc • DEMKO13ATEX1325026X
IECEx	IECEx System, compliant with: • IEC 60079-0; General Requirements • IEC 60079-15; Potentially Explosive Atmospheres, Protection "n" • II 3 G Ex nA IIC T4 Gc • IECEx UL 14.0008X
KC	Korean Registration of Broadcasting and Communications Equipment, compliant with: Article 58-2 of Radio Waves Act, Clause 3
EAC	Russian Customs Union TR CU 020/2011 EMC Technical Regulation Russian Customs Union TR CU 004/2011 LV Technical Regulation

(1) See the Product Certification link at rok.auto/certifications for Declarations of Conformity, Certificates, and other certification details.

1756-IR12, 1756-IR12K

ControlLogix RTD analog input module

IMPORTANT: Remember the following:

- If separate power sources are used, do not exceed the specific isolation voltage as listed in the specifications.
- For 2-wire resistor applications including calibration, make sure IN_x/B and RTN_x/C are shorted together.

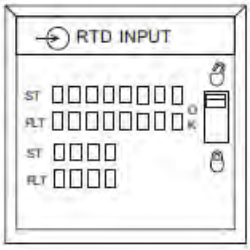

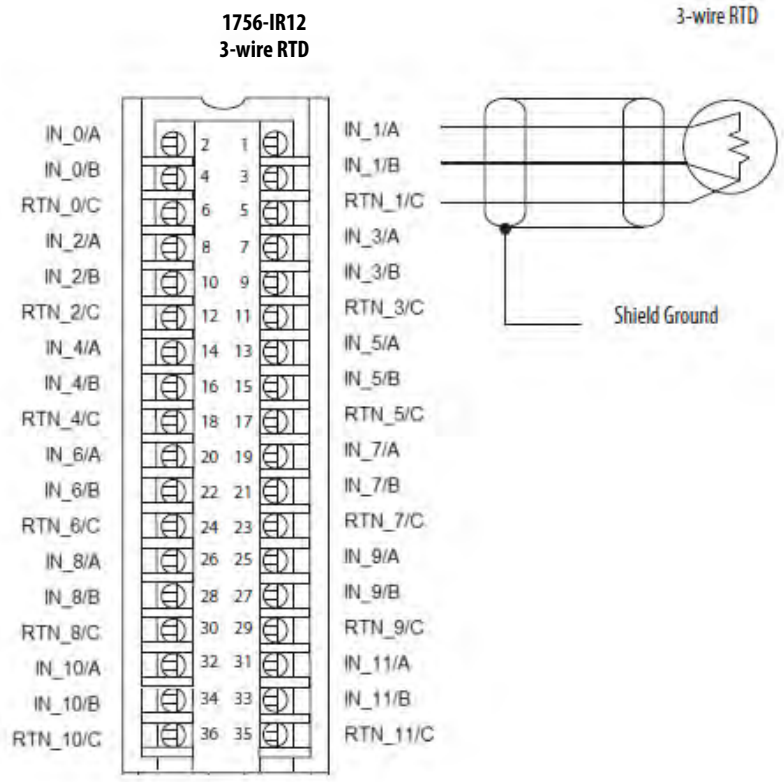

Technical Specifications - 1756-IR12, 1756-IR12K

Attribute	1756-IR12, 1756-IR12K
Inputs	Twelve channels RTD mode
Input range	1…500 Ω 2…1000 Ω 4…2000 Ω 8…4000 Ω
Resolution	24 bits 0…510 Ω: 0.06 mΩ/count 0…1020 Ω: 0.12 mΩ/count 0…2040 Ω: 0.25 mΩ/count 0…4080 Ω: 0.50 mΩ/count
RTD sensors supported	100, 200, 500, 1000 Ω Platinum, alpha=385 100, 200, 500, 1000 Ω Platinum, alpha=3916 120 Ω Nickel, alpha=672 100, 120, 200, 500 Ω Nickel, alpha=618 10 Ω Copper, alpha=427
Current draw @ 5.1V	200 mA
Current draw @ 24V	70 mA
Total backplane power	2.7 W
Power dissipation, max	2.7 W

Technical Specifications - 1756-IR12, 1756-IR12K

Attribute	1756-IR12, 1756-IR12K
Thermal dissipation	9.2 BTU/hr
RTD excitation current	600 µA
Overvoltage protection, max	±30V DC
Common mode noise rejection	120 dB @ 60 Hz 1000 Ω differential 100 dB @ 50 Hz 1000 Ω differential
Channel bandwidth	Notch filter configuration dependent See publication 1756-UM540 for possible values.
Settling time	Notch filter configuration dependent See publication 1756-UM540 for possible values.
Open circuit detection	Positive full-scale reading within 2 s
Calibrated accuracy @ 25 °C	0…510 Ω range: 0.1% Other Ω ranges: 0.25%
Module error over full temperature range	0…510 Ω range: 0.2% Other Ω ranges: 0.5%
Module input scan time, min	50 ms
Data format	IEEE 32-bit floating point
Module conversion method	Sigma-Delta
Isolation Voltage	250V (continuous), reinforced insulation type, inputs to backplane No isolation between individual inputs
RTD sensor types/temperature range (Each sensor type in a cell supports all temperature ranges in the corresponding column to the right.)	
100 Ω PT 385 20 Ω PT 385 500 Ω PT 385 1000 Ω PT 385	-200…+870 °C (-328…+1598 °F) 73…1143 °K 132…2058 °R
100 Ω PT 3916 20 Ω PT 3916 500 Ω PT 3916 1000 Ω PT 3916	-200…+630 °C (-328…+1166 °F) 73…903 °K 132…1626 °R
10 Ω CU 427	-200…+260 °C (-328…+500 °F) 73…533 °K 132…960 °R
120 Ω NI 672	-80…+320 °C (-112…+608 °F) 193…593 °K 348…1068 °R
100 Ω NI 618 120 Ω NI 618 200 Ω NI 618 500 Ω NI 618	-60…+250 °C (-76…+482 °F) 213…523 °K 384…942 °R
Module keying	Electronic, software configurable
Removable terminal block	1756-TBCH 1756-TBS6H
RTB keying	User-defined mechanical
Slot width	1

Technical Specifications - 1756-IR12, 1756-IR12K

Attribute	1756-IR12, 1756-IR12K
Wire size	0.33…2.1 mm^2 (22…14 AWG) solid or stranded shielded copper wire, rated at 90 °C (194 °F) or greater, 1.2 mm (3/64 in.) insulation max
Wire category	2 on signal ports(1)
Enclosure type	None (open-style)
North American temp code	T4A
ATEX Temp Code	T4
IECEx Temp Code	T4

(1) Use this conductor category information for planning conductor routing as described in the system-level installation manual. See the Industrial Automation Wiring and Grounding Guidelines, publication 1770-4.1.

Environmental Specifications - 1756-IR12, 1756-IR12K

Attribute	1756-IR12, 1756-IR12K
Temperature, operating IEC 60068-2-1 (Test Ad, Operating Cold), IEC 60068-2-2 (Test Bd, Operating Dry Heat), IEC 60068-2-14 (Test Nb, Operating Thermal Shock)	0…60 °C (32…140 °F)
Temperature, surrounding air, max	60 °C (140 °F)
Temperature, nonoperating IEC 60068-2-1 (Test Ab, Unpackaged Nonoperating Cold), IEC 60068-2-2 (Test Bb, Unpackaged Nonoperating Dry Heat), IEC 60068-2-14 (Test N/A, Unpackaged Nonoperating Thermal Shock)	-40…+85 °C (-40…+185 °F)
Relative humidity IEC 60068-2-30 (Test dB, Unpackaged Damp Heat)	5…95% noncondensing
Vibration	2 g @ 10…500 Hz
Shock, operating IEC 60068-2-27 (Test Ea, Unpackaged Shock)	30 g
Shock, nonoperating IEC 60068-2-27 (Test Ea, Unpackaged Shock)	50 g
Emissions IEC 61000-6-4	IEC 61000-6-4
ESD Immunity IEC 61000-4-2	6 kV contact discharges 8 kV air discharges
Radiated RF Immunity IEC 61000-4-3	10V/m with 1 kHz sine-wave 80% AM from 80…2000 MHz 10V/m with 200 Hz 50% Pulse 100% AM at 900 MHz 10V/m with 200 Hz 50% Pulse 100% AM at 1890 MHz 3V/m with 1 kHz sine-wave 80% AM from 2000…2700 MHz
EFT/B Immunity IEC 61000-4-4	±2 kV at 5/100kHz on shielded ports
Surge Transient Immunity IEC 61000-4-5	±2 kV line-earth(CM) on shielded ports
Conducted RF Immunity IEC 61000-4-6	10V rms with 1 kHz sine-wave 80% AM from 150 kHz…80 MHz

Certifications - 1756-IR12, 1756-IR12K

Certification (when product is marked)[1]	Description
c-UL-us	UL Listed Industrial Control Equipment, certified for US and Canada. See UL File E65584. UL Listed for Class I, Division 2 Group A,B,C,D Hazardous Locations, certified for U.S. and Canada. See UL File E194810.
CE	European Union 2004/108/EC EMC Directive, compliant with: • EN 61326-1; Meas./Control/Lab., Industrial Requirements • EN 61000-6-2; Industrial Immunity • EN 61000-6-4; Industrial Emissions • EN 61131-2; Programmable Controllers (Clause 8, Zone A & B) European Union 2014/35/EU LVD, compliant with: • EN 61010-2-201; Control Equipment Safety Requirements
RCM	Australian Radiocommunications Act, compliant with: • EN 61000-6-4; Industrial Emissions
Ex	European Union 2014/34/EU ATEX Directive, compliant with: • EN 60079-0; General Requirements • EN 60079-15; Potentially Explosive Atmospheres, Protection "n" II 3 G Ex nA IIC T4 Gc DEMKO15ATEX1482X
IECEx	IECEx System, compliant with: • IEC 60079-0; General Requirements • IEC 60079-15; Potentially Explosive Atmospheres, Protection "n" II 3 G Ex nA IIC T4 Gc IECEx UL 15.0053X
KC	Korean Registration of Broadcasting and Communications Equipment, compliant with: Article 58-2 of Radio Waves Act, Clause 3
EAC	Russian Customs Union TR CU 020/2011 EMC Technical Regulation Russian Customs Union TR CU 004/2011 LV Technical Regulation

(1) See the Product Certification link at rok.auto/certifications for Declarations of Conformity, Certificates, and other certification details.

1756-IT6I

ControlLogix temperature sensing analog input module

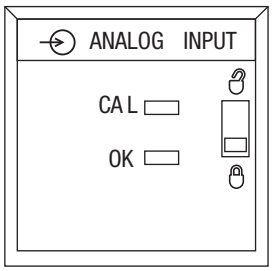

1756-IT6I

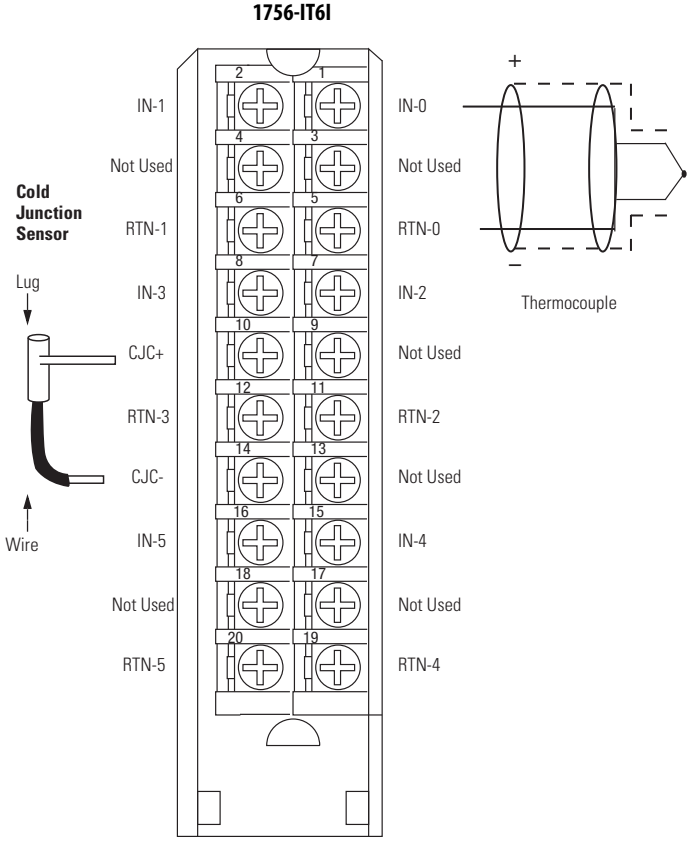

One CJC, part number 94238301, is shipped with the module. A replacement can be ordered as RP-94238301.

Signal and User Counts - 1756-IT6I

Range	Low Signal and User Counts	High Signal and User Counts
-12…30 mV	-15.80323 mV -32768 counts	31.396 mV 32767 counts
-12…78 mV	-15.15836 mV -32768 counts	79.241 mV 32767 counts

Technical Specifications - 1756-IT6I

Attribute	1756-IT6I
Inputs	Six individually isolated thermocouple 1 CJC
Input range	-12…78 mV -12…30 mV (high-resolution range)
Resolution	16 bits -12…78 mV: 1.4 µV/bit (typical) -12…30 mV: 0.7 µV/bit (high-resolution range)
Thermocouples	B, E, J, K, R, S, T, N, C, D, L (TXK/XK)
Thermocouple linearization	ITS-90

Technical Specifications - 1756-IT6I (continued)

Attribute	1756-IT6I
Current draw @ 5.1V	250 mA
Current draw @ 24V	125 mA
Total backplane power	4.3 W
Power dissipation, max	4.3 W
Thermal dissipation	14.66 BTU/hr
Input impedance	>10 MΩ
Open circuit detection time	Positive full scale reading within 2 s
Overvoltage protection, max	120V AC/DC
Normal mode noise rejection	60 dB at 60 Hz(1)
Common mode noise rejection	120 dB @ 60 Hz 100 dB @ 50 Hz
Channel bandwidth	15 Hz (-3 dB)(1)
Settling time	<80 ms to 5% of full scale(1)
Calibrated accuracy @ 25 °C	Better than 0.1% of range
Calibration interval	6 months
Local CJC sensor accuracy	±0.3…3.2 °C, depending on channel
Remote CJC sensor accuracy	±0.3 °C
Offset drift	0.5 µV/°C
Gain drift with temperature, nom	65 ppm/°C
Gain drift with temperature, max	80 ppm/°C
Module error	0.5% of range
Module scan time	25 ms min floating point (millivolt) 50 ms min floating point (temperature) 10 ms min integer (millivolt)(1)
Data format	Integer mode (left justified, 2 s complement) IEEE 32-bit floating point
Module conversion method	Sigma-Delta
Isolation voltage	250V (continuous), basic insulation type, input channels-to-backplane, and input channel-to-channel
Module keying	Electronic, software configurable
Removable terminal block	1756-TBNH 1756-TBSH
RTB keying	User-defined mechanical
Slot width	1
Wire category	2(2)
Enclosure type	None (open-style)
North American temperature code	T4A
IEC temperature code	T4

(1) Notch filter dependent.

(2) Use this conductor category information for planning conductor routing as described in the system-level installation manual. See the Industrial Automation Wiring and Grounding Guidelines, publication 1770-4.1.

Thermocouple Ranges - 1756-IT6I

Attribute	1756-IT6I	
Thermocouple temperature/millivolt input range	-12…78 mV range	-12…30 mV range
Thermocouple Type B	300…1820 °C (572…3308 °F)	Full range
Thermocouple Type C	0…2315 °C (32…4199 °F)	0…1725 °C (32…3137 °F)
Thermocouple Type E	-270…+1000 °C (-454…+1832 °F)	-270…+415 °C (-454…+779 °F)
Thermocouple Type J	-210…+1200 °C (-346…+2192 °F)	-210…+550 °C (-346…+1022 °F)
Thermocouple Type K	-270…+1372 °C (-454…+2502 °F)	-270…+725 °C (-454…+1337 °F)
Thermocouple Type N	-270…+1300 °C (-454…+2372 °F)	-270…+840 °C (-454…+1544 °F)
Thermocouple Type R	-50…+1768 °C (-58…+3215 °F)	Full range
Thermocouple Type S	-50…+1768 °C (-58…+3215 °F)	Full range
Thermocouple Type T	-270…+400 °C (-454…+752 °F)	Full range
Thermocouple Type D	0…2320 °C (32…4208 °F)	0…1718 °C (32…3124 °F)
Thermocouple Type L (TXK/XK)	-200…+800 °C (-328…+1472 °F)	0…200…399 °C (392…750 °F) °C (32…3124 °F)
Thermocouple resolution over temperature range, nom	-12…78 mV range	-12…30 mV range
Type B, R, S, C	~0.15 °C (~0.28 °F)	~0.08 °C (~0.15 °F)
Type E, J, K, T, N	~0.05 °C (~0.09 °F)	~0.03 °C (~0.05 °F)
Type D	~0.07 °C (~0.13 °F)	~0.03 °C (~0.05 °F)
Type TXK/XK (L)	~0.02 °C (~0.04 °F)	~0.01 °C (~0.02 °F)

Environmental Specifications - 1756-IT6I

Attribute	1756-IT6I
Temperature, operating IEC 60068-2-1 (Test Ad, Operating Cold), IEC 60068-2-2 (Test Bd, Operating Dry Heat), IEC 60068-2-14 (Test Nb, Operating Thermal Shock)	0…60 °C (32…140 °F)
Temperature, surrounding air, max	60 °C (140 °F)
Temperature, nonoperating IEC 60068-2-1 (Test Ab, Unpackaged Nonoperating Cold), IEC 60068-2-2 (Test Bb, Unpackaged Nonoperating Dry Heat), IEC 60068-2-14 (Test N/A, Unpackaged Nonoperating Thermal Shock)	-40…+85 °C (-40…+185 °F)
Relative humidity IEC 60068-2-30 (Test dB, Unpackaged Damp Heat)	5…95% noncondensing
Vibration IEC 60068-2-6 (Test Fc, Operating)	2 g @ 10…500 Hz
Shock, operating IEC 60068-2-27 (Test Ea, Unpackaged Shock)	30 g
Shock, nonoperating IEC 60068-2-27 (Test Ea, Unpackaged Shock)	50 g
Emissions	IEC 61000-6-4
ESD immunity IEC 61000-4-2	6 kV contact discharges 8 kV air discharges
Radiated RF immunity IEC 61000-4-3	10V/m with 1 kHz sine-wave 80% AM from 80…2000 MHz 10V/m with 200 Hz 50% Pulse 100% AM @ 900 MHz 10V/m with 200 Hz 50% Pulse 100% AM @ 1890 MHz 3V/m with 1 kHz sine-wave 80% AM from 2000…2700 MHz

Environmental Specifications - 1756-IT6I (continued)

Attribute	1756-IT6I
EFT/B immunity IEC 61000-4-4	±2 kV at 5 kHz on shielded signal ports
Surge transient immunity IEC 61000-4-5	±2 kV line-earth (CM) on shielded signal ports
Conducted RF immunity IEC 61000-4-6	10V rms with 1 kHz sine-wave 80% AM from 150 kHz…80 MHz on shielded signal ports

Certifications - 1756-IT6I

Certification (when product is marked)(1)	1756-IT6I
UL	UL Listed Industrial Control Equipment. See UL File E65584.
CSA	CSA Certified Process Control Equipment. See CSA File LR54689C. CSA Certified Process Control Equipment for Class I, Division 2 Group A,B,C,D Hazardous Locations. See CSA File LR69960C.
CE	European Union 2014/30/EU EMC Directive, compliant with: • EN 61326-1; Meas./Control/Lab., Industrial Requirements • EN 61000-6-2; Industrial Immunity • EN 61000-6-4; Industrial Emissions • EN 61131-2; Programmable Controllers (Clause 8, Zone A & B) European Union 2014/35/EU LVD, compliant with: EN 61131-2; Programmable Controllers (Clause 11)
RCM	Australian Radiocommunications Act, compliant with: EN 61000-6-4; Industrial Emissions
Ex	European Union 2014/34/EU ATEX Directive, compliant with: • EN 60079-15; Potentially Explosive Atmospheres, Protection "n" • EN 60079-0; General Requirements II 3 G Ex nA IIC T4 X Gc
FM	FM Approved Equipment for use in Class I Division 2 Group A,B,C,D Hazardous Locations
KC	Korean Registration of Broadcasting and Communications Equipment, compliant with: Article 58-2 of Radio Waves Act, Clause 3
EAC	Russian Customs Union TR CU 020/2011 EMC Technical Regulation Russian Customs Union TR CU 004/2011 LV Technical Regulation

(1) See the Product Certification link at rok.auto/certifications for Declarations of Conformity, Certificates, and other certification details.

1756-IT6I2

ControlLogix enhanced thermocouple analog input module

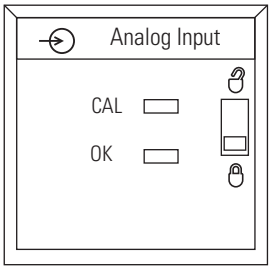

1756-IT6I Cold Junction Sensor

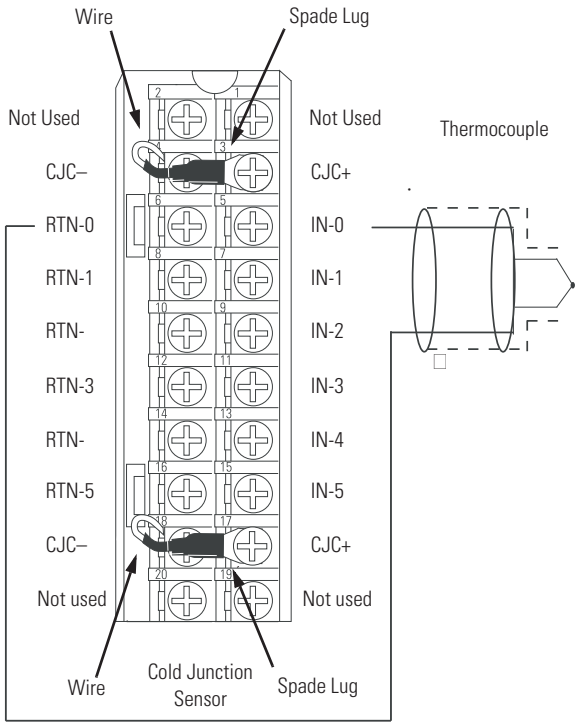

Two CJCs, part number 94286501, are shipped with the module. Replacements can be ordered as RP-94286501.

Signal and User Counts - 1756-IT6I2

Range	Low Signal and User Counts	High Signal and User Counts
-12…30 mV	-15.80323 mV -32768 counts	31.396 mV 32767 counts
-12…78 mV	-15.15836 mV -32768 counts	79.241 mV 32767 counts

Technical Specifications - 1756-IT6I2

Attribute	1756-IT6I2
Inputs	Six individually isolated thermocouple 2 CJC
Input range	-12…78 mV (1.4 µV per bit) -12…30 mV (0.7 µV per bit – high-resolution range)
Resolution	16 bits -12…78 mV: 1.4 µV/bit -12…30 mV: 0.7 µV/bit
Thermocouples	B, E, J, K, R, S, T, N, C, D, L (TXK/XK)
Thermocouple linearization	ITS-90
Current draw @ 5.1V	200 mA
Current draw @ 24V	150 mA

Technical Specifications - 1756-IT6I2 (continued)

Attribute	1756-IT6I2
Total backplane power	4.6 W
Power dissipation, max	4.6 W
Thermal dissipation	15.7 BTU/hr
Input impedance	>10 MΩ
Open circuit detection time	Positive full scale reading within 2 s
Overvoltage protection, max	120V AC/DC
Normal mode noise rejection	60 dB at 60 Hz(1)
Common mode noise rejection	160 dB min, tested @ 600V AC/60 Hz applied with 100 Ω differential resistance
Channel bandwidth	15 Hz(1)
Settling time	<80 ms to 5% of full scale(1)
Calibrated accuracy @ 25 °C	0.05% of full range @ 25 °C (77 °F) typical Better than 0.1% of range @ 25 °C (77 °F) worst case
Calibration interval	12 months
Local CJC sensor accuracy	±0.3 °C
Remote CJC sensor accuracy	±0.3 °C
Offset drift	0.5 µV/°C
Gain drift with temperature, nom	15 ppm/°C 1.4 µV/°C for -12…78 mV 0.6 µV/°C for -12…30 mV
Gain drift with temperature, max	25 ppm/°C 2.3 µV/°C for -12…78 mV 1.1 µV/°C for -12…30 mV
Module error	0.15% of range
Module scan time	25 ms min floating point (millivolt) 50 ms min floating point (temperature) 10 ms min integer (millivolt)(1)
Data format	Integer mode (left justified, 2 s complement) IEEE 32-bit floating point
Module conversion method	Sigma-Delta
Isolation voltage	250V (continuous), basic insulation type, input channels-to-backplane, and input channel-to-channel
Module keying	Electronic, software configurable
Removable terminal block	1756-TBNH only
RTB keying	User-defined mechanical
Slot width	1
Wire category	2(2)
Enclosure type	None (open-style)
North American temperature code	T4A
IEC temperature code	T4

(1) Notch filter dependent.

(2) Use this conductor category information for planning conductor routing as described in the system-level installation manual. See the Industrial Automation Wiring and Grounding Guidelines, publication 1770-4.1.

Thermocouple Ranges - 1756-IT6I2

Attribute	1756-IT6I2	
Thermocouple temperature/millivolt input range	-12…78 mV range	-12…30 mV range
Thermocouple Type B	300…1820 °C (572…3308 °F)	Full range
Thermocouple Type C	0…2315 °C (32…4199 °F)	0…1725 °C (32…3137 °F)
Thermocouple Type E	-270…+1000 °C (-454…+1832 °F)	-270…+415 °C (-454…+779 °F)
Thermocouple Type J	-210…+1200 °C (-346…+2192 °F)	-210…+550 °C (-346…+1022 °F)
Thermocouple Type K	-270…+1372 °C (-454…+2502 °F)	-270…+725 °C (-454…+1337 °F)
Thermocouple Type N	-270…+1300 °C (-454…+2372 °F)	-270…+840 °C (-454…+1544 °F)
Thermocouple Type R	-50…+1768 °C (-58…+3215 °F)	Full range
Thermocouple Type S	-50…+1768 °C (-58…+3215 °F)	Full range
Thermocouple Type T	-270…+400 °C (-454…+752 °F)	Full range
Thermocouple Type D	0…2320 °C (32…4208 °F)	0…1718 °C (32…3124 °F)
Thermocouple Type L (TXK/XK)	-200…+800 °C (-328…+1472 °F)	0…200…399 °C (392…750 °F) °C (32…3124 °F)
Thermocouple resolution over temperature range, nom	-12…78 mV range	-12…30 mV range
Type B, R, S, C	~0.15 °C (~0.28 °F)	~0.08 °C (~0.15 °F)
Type E, J, K, T, N	~0.05 °C (~0.09 °F)	~0.03 °C (~0.05 °F)
Type D	~0.07 °C (~0.13 °F)	~0.03 °C (~0.05 °F)
Type TXK/XK (L)	~0.02 °C (~0.04 °F)	~0.01 °C (~0.02 °F)

Environmental Specifications - 1756-IT6I2

Attribute	1756-IT6I2
Temperature, operating IEC 60068-2-1 (Test Ad, Operating Cold), IEC 60068-2-2 (Test Bd, Operating Dry Heat), IEC 60068-2-14 (Test Nb, Operating Thermal Shock)	0…60 °C (32…140 °F)
Temperature, surrounding air, max	60 °C (140 °F)
Temperature, nonoperating IEC 60068-2-1 (Test Ab, Unpackaged Nonoperating Cold), IEC 60068-2-2 (Test Bb, Unpackaged Nonoperating Dry Heat), IEC 60068-2-14 (Test N/A, Unpackaged Nonoperating Thermal Shock)	-40…+85 °C (-40…+185 °F)
Relative humidity IEC 60068-2-30 (Test dB, Unpackaged Damp Heat)	5…95% noncondensing
Vibration IEC 60068-2-6 (Test Fc, Operating)	2 g @ 10…500 Hz
Shock, operating IEC 60068-2-27 (Test Ea, Unpackaged Shock)	30 g
Shock, nonoperating IEC 60068-2-27 (Test Ea, Unpackaged Shock)	50 g
Emissions	IEC 61000-6-4
ESD immunity IEC 61000-4-2	6 kV contact discharges 8 kV air discharges
Radiated RF immunity IEC 61000-4-3	10V/m with 1 kHz sine-wave 80% AM from 80…2000 MHz 10V/m with 200 Hz 50% Pulse 100% AM @ 900 MHz 10V/m with 200 Hz 50% Pulse 100% AM @ 1890 MHz 3V/m with 1 kHz sine-wave 80% AM from 2000…2700 MHz

Environmental Specifications - 1756-IT6I2 (continued)

Attribute	1756-IT6I2
EFT/B immunity IEC 61000-4-4	±2 kV at 5 kHz on shielded signal ports
Surge transient immunity IEC 61000-4-5	±2 kV line-earth (CM) on shielded signal ports
Conducted RF immunity IEC 61000-4-6	10V rms with 1 kHz sine-wave 80% AM from 150 kHz…80 MHz on shielded signal ports

Certifications - 1756-IT6I2

Certification (when product is marked)(1)	1756-IT6I2
UL	UL Listed Industrial Control Equipment. See UL File E65584.
CSA	CSA Certified Process Control Equipment. See CSA File LR54689C. CSA Certified Process Control Equipment for Class I, Division 2 Group A,B,C,D Hazardous Locations. See CSA File LR69960C.
CE	European Union 2014/30/EU EMC Directive, compliant with: • EN 61326-1; Meas./Control/Lab., Industrial Requirements • EN 61000-6-2; Industrial Immunity • EN 61000-6-4; Industrial Emissions • EN 61131-2; Programmable Controllers (Clause 8, Zone A & B) European Union 2014/35/EU LVD, compliant with: EN 61131-2; Programmable Controllers (Clause 11)
RCM	Australian Radiocommunications Act, compliant with: EN 61000-6-4; Industrial Emissions
Ex	European Union 2014/34/EU ATEX Directive, compliant with: • EN 60079-15; Potentially Explosive Atmospheres, Protection "n" • EN 60079-0; General Requirements II 3 G Ex nA IIC T4 X Gc
FM	FM Approved Equipment for use in Class I Division 2 Group A,B,C,D Hazardous Locations
KC	Korean Registration of Broadcasting and Communications Equipment, compliant with: Article 58-2 of Radio Waves Act, Clause 3
EAC	Russian Customs Union TR CU 020/2011 EMC Technical Regulation Russian Customs Union TR CU 004/2011 LV Technical Regulation

(1) See the Product Certification link at rok.auto/certifications for Declarations of Conformity, Certificates, and other certification details.

1756-IT16, 1756-IT16K

ControlLogix thermocouple analog input module.

IMPORTANT: Remember the following:

- Connect the white end of the CJC sensor to the even-numbered terminal. Connect the orange end of the CJC sensor to the odd-numbered terminals.
  For CJC 0:
  –Orange end - Connected to terminal number 35
  –Orange end - Connected to terminal number 35
  –Orange end - Connected to terminal number 35
- CJC sensors do not come with the module. You must order the sensors, product catalog number 1756-CJC, separately.
- If separate power sources are used, do not exceed the specific isolation voltage as listed in the specifications.

1756-IT16, 1756-IT16K

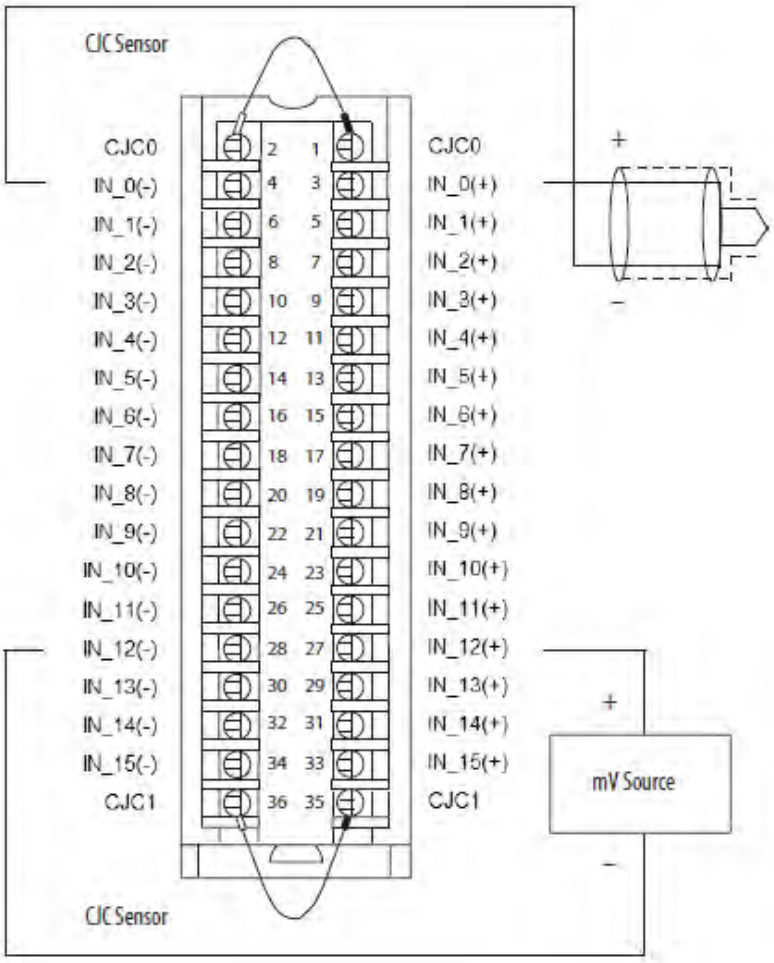

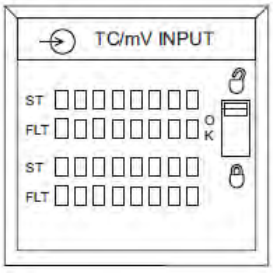

1756-IT16, 1756-IT16K - Technical Specifications

Attribute	1756-IT16, 1756-IT16K
Inputs	16 channels, thermocouple mode Two CJC sensors for Thermocouple use. The CJC sensors, product catalog number 1756-CJC, do not come with the module. You must order the sensors separately.
Input range	-100…100 mV Max 5VA
Resolution	24 bits -101…101 mV: 0.01 µV/count
Thermocouple types	B, C, D, E, J, K, N, R, S, T, TXK/XK (L)
Thermocouple linearization	ITS-90
Current draw @ 5.1V	200 mA
Current draw @ 24V	80 mA
Total backplane power	3 W

1756-IT16, 1756-IT16K - Technical Specifications (continued)

Attribute	1756-IT16, 1756-IT16K
Power dissipation, max	3 W
Thermal dissipation	9.9 BTU/hr
Input impedance, approx	1 GΩ
Overvoltage protection, max	±30V DC
Normal mode noise rejection	75 dB at 60 Hz[1]
Common mode noise rejection	120 dB @ 60 Hz 1000 Ω differential 100 dB @ 50 Hz 1000 Ω differential
Channel bandwidth	Notch filter configuration dependent See publication 1756-UM540 for possible values.
Settling time	Notch filter configuration dependent See publication 1756-UM540 for possible values.
Open circuit detection	Positive full-scale reading within 2 s
Calibrated accuracy @ 25 °C	0.1%
Module error over full temperature range	0.2%
Local CJC sensor accuracy	± 0.3 °C
Remote CJC sensor, accuracy	± 0.3 °C
Module input scan time, min	50 ms
Data format	IEEE 32-bit floating point
Module conversion method	Sigma-Delta
Isolation voltage	250V (continuous), reinforced insulation type, inputs to backplane No isolation between individual inputs
Thermocouple type/temperature range	
Thermocouple Type B	21…1820 °C (68…3308 °F) 293…2093 °K 528…3768 °R
Thermocouple Type C	0…2320 °C (32…4208 °F) 273…2593 °K 492…4668 °R
Thermocouple Type D	0…2320 °C (32…4208 °F) 273…2593 °K 492…4668 °R
Thermocouple Type E	-270…+1000 °C (-454…+1832 °F) 3…1273 °K 6…2292 °R
Thermocouple Type J	-210…+1200 °C (-346…+2192 °F) 63…1473 °K 114…2652 °R
Thermocouple Type K	-270…+1372 °C (-454…+2502 °F) 3…1645 °K 6…2961 °R
Thermocouple Type N	-270…+1300 °C (-454…+2372 °F) 3…1573 °K 6…2832 °R

1756-IT16, 1756-IT16K - Technical Specifications (continued)

Attribute	1756-IT16, 1756-IT16K
Thermocouple Type R	-50…+1768 °C (-58…+3215 °F) 223…2041 °K 402…3674 °R
Thermocouple Type S	-50…+1768 °C (-58…+3215 °F) 223…2041 °K 402…3674 °R
Thermocouple Type T	-270…+400 °C (-454…+752 °F) 3…673 °K 6…1212 °R
Thermocouple Type TXK/XK (L)	-200…+800 °C (-328…+1472 °F) 73…1073 °K 132…1932 °R
Thermocouple type/resolution, nom	
Type C, R	~0.03 °C (~0.05 °F)
Type B, S	~0.04 °C (~0.07 °F)
Type E, J, K, N, T, TXK/XK (L)	~0.01 °C (~0.02 °F)
Type D	~0.02 °C (~0.04 °F)
Module keying	Electronic, software configurable
Removable terminal block	1756-TBCH 1756-TBS6H
RTB keying	User-defined mechanical
Slot width	1
Wire size	0.33…2.1 mm^2 (22…14 AWG) solid or stranded shielded copper wire, rated at 90 °C (194 °F) or greater, 1.2 mm (3/64 in.) insulation max
Wire category	2 on shielded signal ports(2)
Enclosure type	None (open-style)
Enclosure type rating	None (open-style)
North American temp code	T4A
ATEX Temp Code	T4
IECEx Temp Code	T4

(1) Notch filter dependent.

(2) Use this conductor category information for planning conductor routing as described in the system-level installation manual. See the Industrial Automation Wiring and Grounding Guidelines, publication 1770-4.1.

1756-IT16, 1756-IT16K - Environmental Specifications

Attribute	1756-IT16, 1756-IT16K
Temperature, operating IEC 60068-2-1 (Test Ad, Operating Cold), IEC 60068-2-2 (Test Bd, Operating Dry Heat), IEC 60068-2-14 (Test Nb, Operating Thermal Shock)	0…60 °C (32…140 °F)
Temperature, surrounding air, max	60 °C (140 °F)
Temperature, nonoperating IEC 60068-2-1 (Test Ab, Unpackaged Nonoperating Cold), IEC 60068-2-2 (Test Bb, Unpackaged Nonoperating Dry Heat), IEC 60068-2-14 (Test N/A, Unpackaged Nonoperating Thermal Shock)	-40…+85 °C (-40…+185 °F)
Relative humidity IEC 60068-2-30 (Test dB, Unpackaged Damp Heat)	5…95% noncondensing
Vibration IEC 60068-2-6 (Test Fc, Operating)	2 g @ 10…500 Hz
Shock, operating IEC 60068-2-27 (Test Ea, Unpackaged Shock)	30 g
Shock, nonoperating IEC 60068-2-27 (Test Ea, Unpackaged Shock)	50 g
Emissions IEC 61000-6-4	IEC 61000-6-4
ESD Immunity IEC 61000-4-2	6 kV contact discharges 8 kV air discharges
Radiated RF Immunity IEC 61000-4-3	10V/m with 1 kHz sine-wave 80% AM from 80…2000 MHz 10V/m with 200 Hz 50% Pulse 100% AM at 900 MHz 10V/m with 200 Hz 50% Pulse 100% AM at 1890 MHz 3V/m with 1 kHz sine-wave 80% AM from 2000…2700 MHz
EFT/B Immunity IEC 61000-4-4	±2 kV at 5/100kHz on shielded ports
Surge Transient Immunity IEC 61000-4-5	±2 kV line-earth (CM) on shielded signal ports
Conducted RF Immunity IEC 61000-4-6	10V rms with 1 kHz sine-wave 80% AM from 150 kHz…80 MHz

Certifications - 1756-IT16, 1756-IT16K

Certification (when product is marked)[1]	Description
c-UL-us	UL Listed Industrial Control Equipment, certified for US and Canada. See UL File E65584. UL Listed for Class I, Division 2 Group A,B,C,D Hazardous Locations, certified for U.S. and Canada. See UL File E194810.
CE	European Union 2004/108/EC EMC Directive, compliant with: • EN 61326-1; Meas./Control/Lab., Industrial Requirements • EN 61000-6-2; Industrial Immunity • EN 61000-6-4; Industrial Emissions • EN 61131-2; Programmable Controllers (Clause 8, Zone A & B) European Union 2014/35/EU LVD, compliant with: • EN 61010-2-201; Control Equipment Safety Requirements
RCM	Australian Radiocommunications Act, compliant with: • EN 61000-6-4; Industrial Emissions
Ex	European Union 2014/34/EU ATEX Directive, compliant with: • EN 60079-0; General Requirements • EN 60079-15; Potentially Explosive Atmospheres, Protection "n" II 3 G Ex nA IIC T4 Gc DEMKO15ATEX1482X
IECEx	IECEx System, compliant with: • IEC 60079-0; General Requirements • IEC 60079-15; Potentially Explosive Atmospheres, Protection "n" II 3 G Ex nA IIC T4 Gc IECEx UL 15.0053X
KC	Korean Registration of Broadcasting and Communications Equipment, compliant with: Article 58-2 of Radio Waves Act, Clause 3
EAC	Russian Customs Union TR CU 020/2011 EMC Technical Regulation Russian Customs Union TR CU 004/2011 LV Technical Regulation

(1) See the Product Certification link at rok.auto/certifications for Declarations of Conformity, Certificates, and other certification details.

1756-IV16, 1756-IV16K

ControlLogix DC (10...30V) sourcing input module

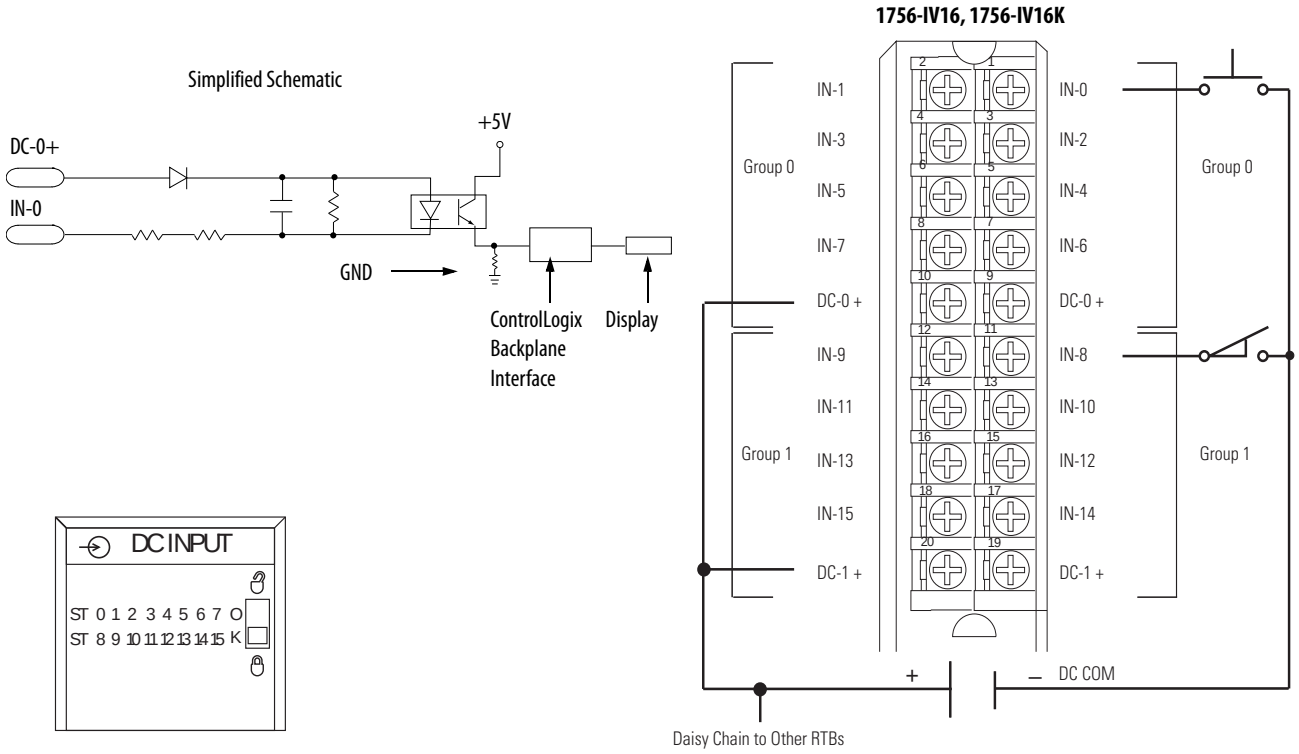

Technical Specifications - 1756-IV16, 1756-IV16K

Attribute	1756-IV16, 1756-IV16K
Inputs	16 (8 points/group)
Voltage category	12/24V DC source
Operating voltage range	10…30V DC
Input voltage, nom	24V DC
Input delay time (screw to backplane) Off to On On to Off	 Hardware delay: 280 µs nom/1 ms max + filter time User-selectable filter time: 0 ms, 1 ms, or 2 ms Hardware delay: 540 µs nom/2 ms max + filter time User-selectable filter time: 0 ms, 1 ms, 2 ms, 9 ms, or 18 ms
Current draw @ 5.1V	110 mA
Current draw @ 24V	2 mA
Total backplane power	0.61 W
Power dissipation, max	5.41 W @ 60 °C (140 °F)
Thermal dissipation	18.47 BTU/hr
Off-state voltage, max	5V DC
Off-state current, max	1.5 mA
On-state current, min	2 mA @ 10V DC
On-state current, max	10 mA @ 30V DC

Technical Specifications - 1756-IV16, 1756-IV16K

Attribute	1756-IV16, 1756-IV16K
Inrush current, max	250 mA
Input impedance, max	3.2 kΩ @ 30V DC
Cyclic update time	200 µs…750 ms
Change of state	Software configurable
Time stamp of inputs	±200 µs
Isolation voltage	250V (continuous), basic insulation type, inputs-to-backplane, and input group-to-group No isolation between individual group inputs
Module keying	Electronic, software configurable
Removable terminal block housing	1756-TBNH 1756-TBSH
RTB keying	User-defined mechanical
Slot width	1
Wire category	1(1)
Enclosure type	None (open-style)
North American temperature code	T4A
IEC temperature code	T4
Reverse polarity protection	Yes

(1) Use this conductor category information for planning conductor routing as described in the system-level installation manual. See the Industrial Automation Wiring and Grounding Guidelines, publication 1770-4.1.

Environmental Specifications - 1756-IV16, 1756-IV16K

Attribute	1756-IV16, 1756-IV16K
Temperature, operating IEC 60068-2-1 (Test Ad, Operating Cold), IEC 60068-2-2 (Test Bd, Operating Dry Heat), IEC 60068-2-14 (Test Nb, Operating Thermal Shock)	0…60 °C (32…140 °F)
Temperature, surrounding air, max	60 °C (140 °F)
Temperature, nonoperating IEC 60068-2-1 (Test Ab, Unpackaged Nonoperating Cold), IEC 60068-2-2 (Test Bb, Unpackaged Nonoperating Dry Heat), IEC 60068-2-14 (Test N/A, Unpackaged Nonoperating Thermal Shock)	-40…+85 °C (-40…+185 °F)
Relative humidity IEC 60068-2-30 (Test dB, Unpackaged Damp Heat)	5…95% noncondensing
Vibration IEC 60068-2-6 (Test Fc, Operating)	2 g @ 10…500 Hz
Shock, operating IEC 60068-2-27 (Test Ea, Unpackaged Shock)	30 g
Shock, nonoperating IEC 60068-2-27 (Test Ea, Unpackaged Shock)	50 g
Emissions	IEC 61000-6-4
ESD immunity IEC 61000-4-2	6 kV contact discharges 8 kV air discharges
Radiated RF immunity IEC 61000-4-3	10V/m with 1 kHz sine-wave 80% AM from 80…2000 MHz 10V/m with 200 Hz 50% Pulse 100% AM @ 900 MHz 10V/m with 200 Hz 50% Pulse 100% AM @ 1890 MHz 3V/m with 1 kHz sine-wave 80% AM from 2000…2700 MHz

Environmental Specifications - 1756-IV16, 1756-IV16K

Attribute	1756-IV16, 1756-IV16K
EFT/B immunity IEC 61000-4-4	±4 kV at 5 kHz on signal ports
Surge transient immunity IEC 61000-4-5	±1 kV line-line (DM) and ±2 kV line-earth (CM) on signal ports
Conducted RF immunity IEC 61000-4-6	10V rms with 1 kHz sine-wave 80% AM from 150 kHz…80 MHz

Certifications - 1756-IV16, 1756-IV16K

Certification (when product is marked)(1)	1756-IV16, 1756-IV16K
UL	UL Listed Industrial Control Equipment. See UL File E65584.
CSA	CSA Certified Process Control Equipment. See CSA File LR54689C. CSA Certified Process Control Equipment for Class I, Division 2 Group A,B,C,D Hazardous Locations. See CSA File LR69960C.
CE	European Union 2014/30/EU EMC Directive, compliant with: • EN 61326-1; Meas./Control/Lab., Industrial Requirements • EN 61000-6-2; Industrial Immunity • EN 61000-6-4; Industrial Emissions • EN 61131-2; Programmable Controllers (Clause 8, Zone A & B) European Union 2014/35/EU LVD, compliant with: EN 61131-2; Programmable Controllers (Clause 11)
RCM	Australian Radiocommunications Act, compliant with: EN 61000-6-4; Industrial Emissions
Ex	European Union 2014/34/EU ATEX Directive, compliant with: • EN 60079-15; Potentially Explosive Atmospheres, Protection "n" • EN 60079-0; General Requirements II 3 G Ex nA IIC T4 X Gc
FM	FM Approved Equipment for use in Class I Division 2 Group A,B,C,D Hazardous Locations
KC	Korean Registration of Broadcasting and Communications Equipment, compliant with: Article 58-2 of Radio Waves Act, Clause 3
EAC	Russian Customs Union TR CU 020/2011 EMC Technical Regulation Russian Customs Union TR CU 004/2011 LV Technical Regulation

(1) See the Product Certification link at rok.auto/certifications for Declarations of Conformity, Certificates, and other certification details.

1756-IV32, 1756-IV32K

ControlLogix DC (10...30V) sourcing input module

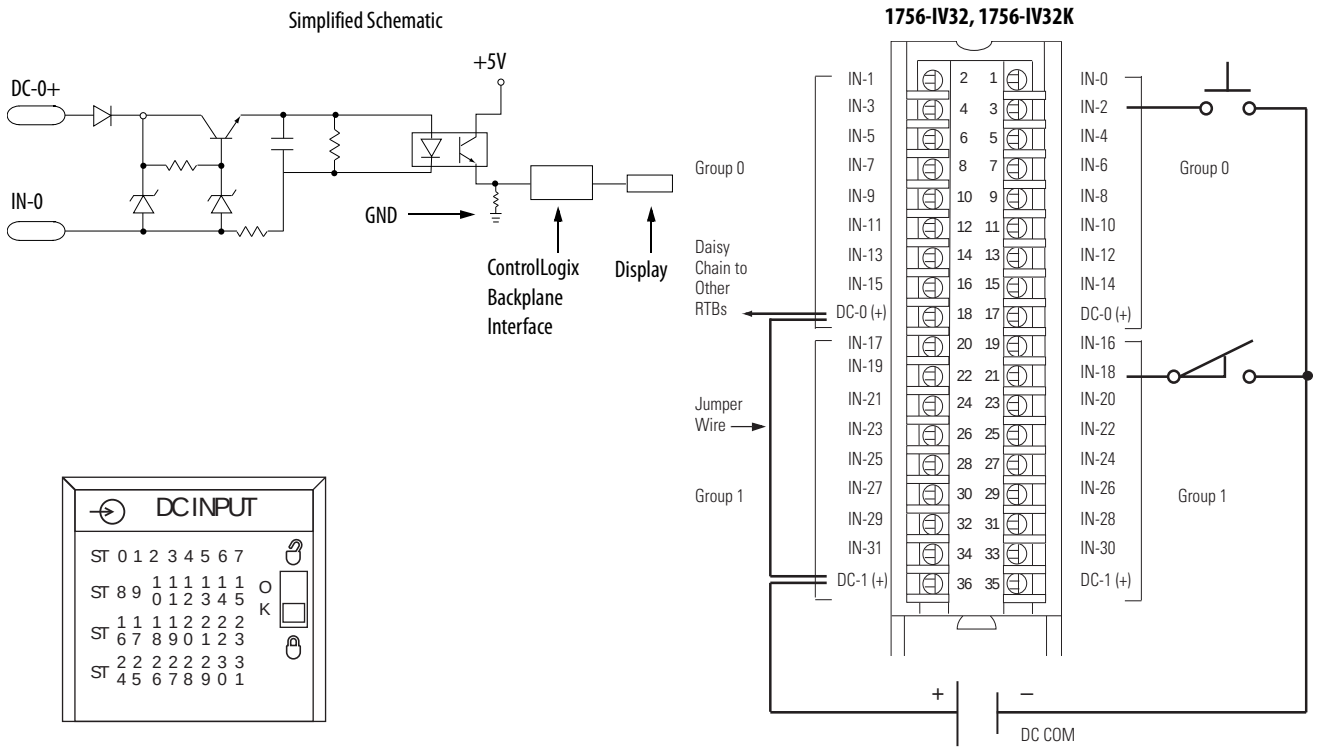

Technical Specifications - 1756-IV32, 1756-IV32K

Attribute	1756-IV32, 1756-IV32K
Inputs	32 (16 points/group)
Voltage category	12/24V DC source
Operating voltage range	10…30V DC
Input voltage, nom	24V DC
Input delay time (screw to backplane) Off to On On to Off	 Hardware delay: 350 µs nom/1 ms max + filter time User-selectable filter time: 0 ms, 1 ms, or 2 ms Hardware delay: 540 µs nom/2 ms max + filter time User-selectable filter time: 0 ms, 1 ms, 2 ms, 9 ms, or 18 ms
Current draw @ 5.1V	120 mA
Current draw @ 24V	2 mA
Total backplane power	0.66 W
Power dissipation, max	4.1 W @ 60 °C (140 °F)
Thermal dissipation	14 BTU/hr @ 60 °C (140 °F)
Off-state voltage, max	5V
Off-state current, max	1.5 mA
On-state current, min	2 mA @ 10V DC
On-state current, max	3.5 mA @ 30V DC

Technical Specifications - 1756-IV32, 1756-IV32K

Attribute	1756-IV32, 1756-IV32K
Inrush current, max	250 mA (decaying to <37% in 22 ms, without activation)
Input impedance, max	8.6 kΩ @ 30V DC
Cyclic update time	200 µs…750 ms
Change of state	Software configurable
Time stamp of inputs	±200 µs
Isolation voltage	250V (continuous), basic insulation type, inputs-to-backplane, and input group-to-group No isolation between individual group inputs
Module keying	Electronic, software configurable
Removable terminal block	1756-TBCH 1756-TBS6H
RTB keying	User-defined mechanical
Slot width	1
Wire category	1 - on signal ports(1)
Enclosure type	None (open-style)
North American temperature code	T4A
IEC temperature code	T4
Reverse polarity protection	Yes

(1) Use this conductor category information for planning conductor routing as described in the system-level installation manual. See the Industrial Automation Wiring and Grounding Guidelines, publication 1770-4.1.

Environmental Specifications - 1756-IV32, 1756-IV32K

Attribute	1756-IV32, 1756-IV32K
Temperature, operating IEC 60068-2-1 (Test Ad, Operating Cold), IEC 60068-2-2 (Test Bd, Operating Dry Heat), IEC 60068-2-14 (Test Nb, Operating Thermal Shock)	0…60 °C (32…140 °F)
Temperature, surrounding air, max	60 °C (140 °F)
Temperature, nonoperating IEC 60068-2-1 (Test Ab, Unpackaged Nonoperating Cold), IEC 60068-2-2 (Test Bb, Unpackaged Nonoperating Dry Heat), IEC 60068-2-14 (Test N/A, Unpackaged Nonoperating Thermal Shock)	-40…+85 °C (-40…+185 °F)
Relative humidity IEC 60068-2-30 (Test dB, Unpackaged Damp Heat)	5…95% noncondensing
Vibration IEC 60068-2-6 (Test Fc, Operating)	2 g @ 10…500 Hz
Shock, operating IEC 60068-2-27 (Test Ea, Unpackaged Shock)	30 g
Shock, nonoperating IEC 60068-2-27 (Test Ea, Unpackaged Shock)	50 g
Emissions	IEC 61000-6-4
ESD immunity IEC 61000-4-2	6 kV contact discharges 8 kV air discharges
Radiated RF immunity IEC 61000-4-3	10V/m with 1k Hz sine-wave 80% AM from 80…2000 MHz 10V/m with 200 Hz 50% Pulse 100% AM @ 900 MHz 10V/m with 200 Hz 50% Pulse 100% AM @ 1890 MHz 3V/m with 1 kHz sine-wave 80% AM from 2000…2700 MHz

Environmental Specifications - 1756-IV32, 1756-IV32K

Attribute	1756-IV32, 1756-IV32K
EFT/B immunity IEC 61000-4-4	±4 kV at 5 kHz on signal ports
Surge transient immunity IEC 61000-4-5	±1 kV line-line (DM) and ±2 kV line-earth (CM) on signal ports
Conducted RF immunity IEC 61000-4-6	10V rms with 1 kHz sine-wave 80% AM from 150 kHz…80 MHz

Certifications - 1756-IV32, 1756-IV32K

Certification (when product is marked)(1)	1756-IV32, 1756-IV32K
UL	UL Listed Industrial Control Equipment. See UL File E65584.
CSA	CSA Certified Process Control Equipment. See CSA File LR54689C. CSA Certified Process Control Equipment for Class I, Division 2 Group A,B,C,D Hazardous Locations. See CSA File LR69960C.
CE	European Union 2014/30/EU EMC Directive, compliant with: • EN 61326-1; Meas./Control/Lab., Industrial Requirements • EN 61000-6-2; Industrial Immunity • EN 61000-6-4; Industrial Emissions • EN 61131-2; Programmable Controllers (Clause 8, Zone A & B) European Union 2014/35/EU LVD, compliant with: EN 61131-2; Programmable Controllers (Clause 11)
RCM	Australian Radiocommunications Act, compliant with: EN 61000-6-4; Industrial Emissions
Ex	European Union 2014/34/EU ATEX Directive, compliant with: • EN 60079-15; Potentially Explosive Atmospheres, Protection "n" • EN 60079-0; General Requirements II 3 G Ex nA IIC T4 X Gc
FM	FM Approved Equipment for use in Class I Division 2 Group A,B,C,D Hazardous Locations
KC	Korean Registration of Broadcasting and Communications Equipment, compliant with: Article 58-2 of Radio Waves Act, Clause 3
EAC	Russian Customs Union TR CU 020/2011 EMC Technical Regulation Russian Customs Union TR CU 004/2011 LV Technical Regulation

(1) See the Product Certification link at rok.auto/certifications for Declarations of Conformity, Certificates, and other certification details.

1756-OA8

ControlLogix 120/240V AC output module

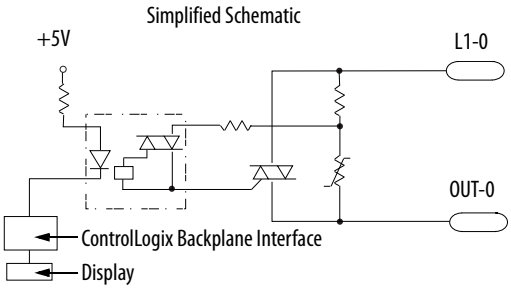

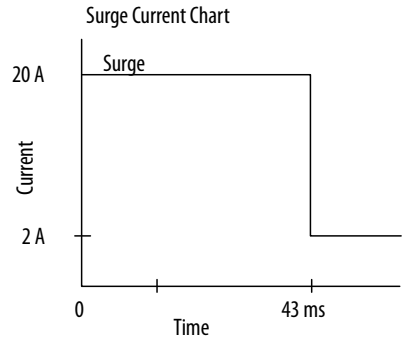

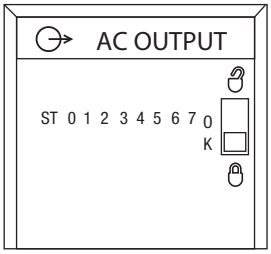

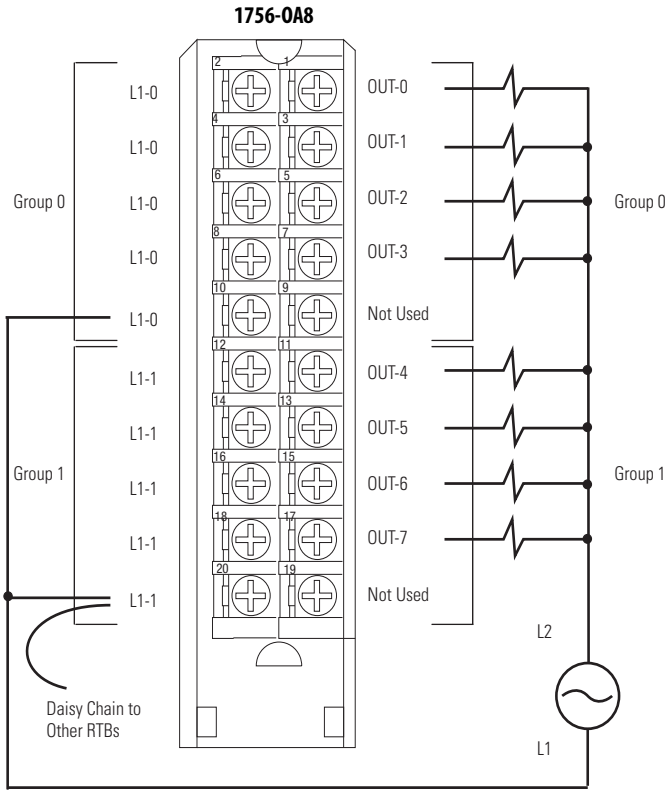

Technical Specifications - 1756-OA8

Attribute	1756-OA8
Outputs	8 (4 points/group)
Pilot duty	2 A
Voltage category	120/240V AC 50/60 Hz
Operating voltage range[1]	74…265V AC 47…63 Hz
Output delay time Off to On On to Off	 9.3 ms @ 60 Hz 11 ms @ 50 Hz 9.3 ms @ 60 Hz 11 ms @ 50 Hz
Current draw @ 5.1V	200 mA
Current draw @ 24V	2 mA
Total backplane power	1.07 W

Technical Specifications - 1756-OA8 (continued)

Attribute	1756-OA8
Power dissipation, max	5.1 W @ 60 °C (140 °F)
Thermal dissipation	17.39 BTU/hr
Off-state leakage current, max	3 mA per point
On-state voltage drop, max	1.5V peak @ 2 A 6V peak @ <50 mA
Current per point, max	2 A @ 60 °C (140 °F) linear derating
Current per module, max	5 A @ 30 °C (86 °F) linear derating 4 A @ 60 °C (140 °F) linear derating
Surge current per point	20 A for 43 ms per point, repeatable every 2 s @ 60 °C (140 °F)
Load current, min	10 mA per point
Commutating voltage	4V/µs for loads > 50 mA 0.2V/µs for loads < 50 mA(2)
Scheduled outputs	Synchronization within 16.7 s max, reference to the Coordinated System Time
States in Fault mode per point	Hold last state, On or Off (Off is default)
States in Program mode per point	Hold last state, On or Off (Off is default)
Isolation voltage	250V (continuous), basic insulation type, outputs-to-backplane, and output group-to-group No isolation between individual group outputs
Inhibit voltage, max	Zero crossing 60V peak
Module keying	Electronic, software configurable
Fusing	Not protected. A fused IFM is recommended to help protect outputs
Removable terminal block	1756-TBNH 1756-TBSH
RTB keying	User-defined mechanical
Slot width	1
Wire category	1(3)
Enclosure type	None (open style)
North American temperature code	T4A

(1) UL certification for 120/240V 50/60 Hz nominal. Rockwell Automation specified to 74…265, 47…63 Hz.

(2) The commutating dv/dt of the output voltage (OUTPUT to L2) should not exceed 0.2V/µs for loads under 50 mA. The commutating dv/dt rating of the module for loads 50…500 mA (OUTPUT to L2) is 4V/µs maximum. If the commutating dv/dt rating of the TRIAC is exceeded, the TRIAC could latch on. If the commutating dv/dt rating is exceeded in the 10…50 mA range, a resistor can be added across the output and L2. The purpose of this resistor is to increase the total output current to 50 mA (I=V/R). At 50 mA and above, the module has a higher commutating dv/dt rating. When adding a resistor for the output to L2, be sure it is rated for the power that it dissipates (P=(V**2)/R). If the commutating dv/dt rating is exceeded in the 50…500 mA range, the L1 AC waveform could be at fault. Be sure that the waveform is a good sinusoid, void of any anomalies such as distorted, or flattened sections.

(3) Use this conductor category information for planning conductor routing as described in the system-level installation manual. See the Industrial Automation Wiring and Grounding Guidelines, publication 1770-4.1.

Environmental Specifications - 1756-OA8

Attribute	1756-OA8
Temperature, operating IEC 60068-2-1 (Test Ad, Operating Cold), IEC 60068-2-2 (Test Bd, Operating Dry Heat), IEC 60068-2-14 (Test Nb, Operating Thermal Shock)	0…60 °C (32…140 °F)
Temperature, surrounding air, max	60 °C (140 °F)
Temperature, nonoperating IEC 60068-2-1 (Test Ab, Unpackaged Nonoperating Cold), IEC 60068-2-2 (Test Bb, Unpackaged Nonoperating Dry Heat), IEC 60068-2-14 (Test Na, Unpackaged Nonoperating Thermal Shock)	-40…+85 °C (-40…+185 °F)
Relative humidity IEC 60068-2-30 (Test dB, Unpackaged Damp Heat)	5…95% noncondensing
Vibration IEC 60068-2-6 (Test Fc, Operating)	2 g @ 10…500 Hz
Shock, operating IEC 60068-2-27 (Test Ea, Unpackaged Shock)	30 g
Shock, nonoperating IEC 60068-2-27 (Test Ea, Unpackaged Shock)	50 g
Emissions	IEC 61000-6-4
ESD immunity IEC 61000-4-2	6 kV contact discharges 8 kV air discharges
Radiated RF immunity IEC 61000-4-3	10V/m with 1 kHz sine-wave 80% AM from 80…2000 MHz 10V/m with 200 Hz 50% Pulse 100% AM @ 900 MHz 10V/m with 200 Hz 50% Pulse 100% AM @ 1890 MHz 3V/m with 1 kHz sine-wave 80% AM from 2000…2700 MHz
EFT/B immunity IEC 61000-4-4	±4 kV at 5 kHz on signal ports
Surge transient immunity IEC 61000-4-5	±1 kV line-line (DM) and ±2 kV line-earth (CM) on signal ports
Conducted RF immunity IEC 61000-4-6	10V rms with 1 kHz sine-wave 80% AM from 150 kHz…80 MHz

Certifications - 1756-OA8

Certification (when product is marked)(1)	1756-OA8
UL	UL Listed Industrial Control Equipment. See UL File E65584.
CSA	CSA Certified Process Control Equipment. See CSA File LR54689C. CSA Certified Process Control Equipment for Class I, Division 2 Group A,B,C,D Hazardous Locations. See CSA File LR69960C.
CE	European Union 2014/30/EU EMC Directive, compliant with: • EN 61326-1; Meas./Control/Lab., Industrial Requirements • EN 61000-6-2; Industrial Immunity • EN 61000-6-4; Industrial Emissions • EN 61131-2; Programmable Controllers (Clause 8, Zone A & B) European Union 2014/35/EU LVD, compliant with: EN 61131-2; Programmable Controllers (Clause 11)
RCM	Australian Radiocommunications Act, compliant with: EN 61000-6-4; Industrial Emissions
FM	FM Approved Equipment for use in Class I Division 2 Group A,B,C,D Hazardous Locations
KC	Korean Registration of Broadcasting and Communications Equipment, compliant with: Article 58-2 of Radio Waves Act, Clause 3
EAC	Russian Customs Union TR CU 020/2011 EMC Technical Regulation Russian Customs Union TR CU 004/2011 LV Technical Regulation

(1) See the Product Certification link at rok.auto/certifications for Declarations of Conformity, Certificates, and other certification details.

1756-OA8D

ControlLogix 120V AC diagnostic output module

Simplified Schematic

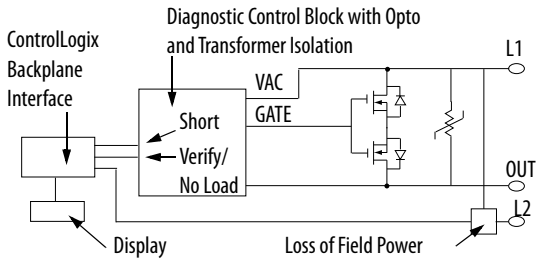

Surge Current Chart

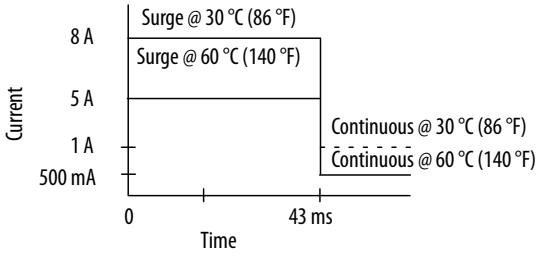

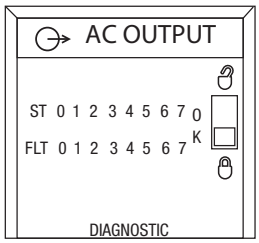

1756-OA8D

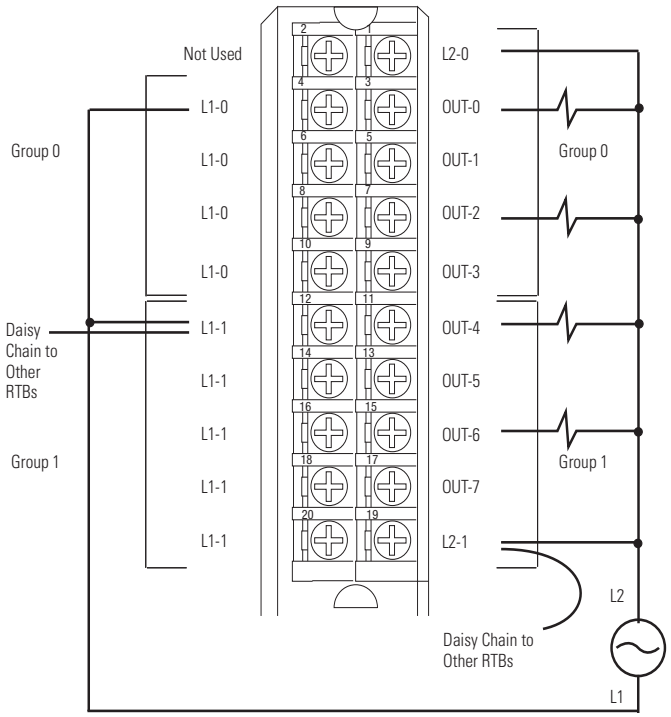

Diagnostic Specifications - 1756-OA8D

Attribute	1756-OA8D
Short trip, min	12 A for 500 µs
No load	Off-state detection only
Output verification	On-state detection only
Pulse test	Configurable maximum width and max time delay from zero cross
Field power loss (zero cross)	Detects at 25V peak min (firmware phase locked loop)
Time stamp of diagnostics	±1 ms

Technical Specifications - 1756-OA8D

Attribute	1756-OA8D
Outputs	8 diagnostic, electronic fusing (4 points/group)
Voltage category	120V AC 50/60 Hz
Operating voltage range[1]	74…132V AC 47…63 Hz
Output delay time Off to On	9.3 ms @ 60 Hz 11 ms @ 50 Hz
On to Off	9.3 ms @ 60 Hz 11 ms @ 50 Hz
Current draw @ 5.1V	175 mA
Current draw @ 24V	250 mA
Total backplane power	6.89 W
Power dissipation, max	5.3 W @ 60 °C (140 °F)
Thermal dissipation	18.0 BTU/hr
Off-state leakage current, max	3 mA per point
On-state voltage drop, max	2.5V peak @ 0.5 A 3V peak @ 1 A
Current per point, max	1 A @ 30 °C (86 °F) linear derating 0.5 A @ 60 °C (140 °F) linear derating
Current per module, max	8 A @ 30 °C (86 °F) linear derating 4 A @ 60 °C (140 °F) linear derating
Surge current per point	8 A for 43 ms per point, repeatable every 2 s @ 30 °C (86 °F) 5 A for 43 ms per point, repeatable every 1 s @ 60 °C (140 °F)
Load current, min	10 mA per point
Scheduled outputs	Synchronization within 16.7 s max, reference to the Coordinated System Time
States in Fault mode per point	Hold last state, On or Off (Off is default)
States in Program mode per point	Hold last state, On or Off (Off is default)
Isolation voltage	125V (continuous), basic insulation type, outputs-to-backplane, and output group-to-group No isolation between individual group outputs
Inhibit voltage, max	Zero crossing 25V peak
Module keying	Electronic, software configurable
Fusing	Electronically fused per point
Removable terminal block	1756-TBNH 1756-TBSH
RTB keying	User-defined mechanical
Slot width	1
Wire size	0.33... 2.1 mm^2 (22...14 AWG) solid or stranded copper wire rated at 90 °C (194 °F), or greater, 1.2 mm^2 (3/64 in.) insulation max
Wire category [2]	1 - on signal ports
Enclosure type	None (open style)
North American temperature code	T4A

(1) UL certification for 120V 50/60 Hz nominal. Rockwell Automation specified to 74…132V, 47…63 Hz.

(2) Use this conductor category information for planning conductor routing as described in the system-level installation manual. See the Industrial Automation Wiring and Grounding Guidelines, publication 1770-4.1.

Environmental Specifications - 1756-OA8D

Attribute	1756-OA8D
Temperature, operating IEC 60068-2-1 (Test Ad, Operating Cold), IEC 60068-2-2 (Test Bd, Operating Dry Heat), IEC 60068-2-14 (Test Nb, Operating Thermal Shock)	0…60 °C (32…140 °F)
Temperature, surrounding air, max	60 °C (140 °F)
Temperature, nonoperating IEC 60068-2-1 (Test Ab, Unpackaged Nonoperating Cold), IEC 60068-2-2 (Test Bb, Unpackaged Nonoperating Dry Heat), IEC 60068-2-14 (Test N/A, Unpackaged Nonoperating Thermal Shock)	-40…+85 °C (-40…+185 °F)
Relative humidity IEC 60068-2-30 (Test dB, Unpackaged Damp Heat)	5…95% noncondensing
Vibration IEC 60068-2-6 (Test Fc, Operating)	2 g @ 10…500 Hz
Shock, operating IEC 60068-2-27 (Test Ea, Unpackaged Shock)	30 g
Shock, nonoperating IEC 60068-2-27 (Test Ea, Unpackaged Shock)	50 g
Emissions	IEC 61000-6-4
ESD immunity IEC 61000-4-2	6 kV contact discharges 8 kV air discharges
Radiated RF immunity IEC 61000-4-3	10V/m with 1 kHz sine-wave 80% AM from 80…2000 MHz 10V/m with 200 Hz 50% Pulse 100% AM @ 900 MHz 10V/m with 200 Hz 50% Pulse 100% AM @ 1890 MHz 3V/m with 1 kHz sine-wave 80% AM from 2000…2700 MHz
EFT/B immunity IEC 61000-4-4	±4 kV at 5 kHz on signal ports
Surge transient immunity IEC 61000-4-5	±1 kV line-line (DM) and ±2 kV line-earth (CM) on signal ports
Conducted RF immunity IEC 61000-4-6	10V rms with 1 kHz sine-wave 80% AM from 150 kHz…80 MHz

Certifications - 1756-OA8D

Certification (when product is marked)[1]	1756-OA8D
UL	UL Listed Industrial Control Equipment. See UL File E65584.
CSA	CSA Certified Process Control Equipment. See CSA File LR54689C. CSA Certified Process Control Equipment for Class I, Division 2 Group A,B,C,D Hazardous Locations. See CSA File LR69960C.
CE	European Union 2014/30/EU EMC Directive, compliant with: • EN 61326-1; Meas./Control/Lab., Industrial Requirements • EN 61000-6-2; Industrial Immunity • EN 61000-6-4; Industrial Emissions • EN 61131-2; Programmable Controllers (Clause 8, Zone A & B) European Union 2014/35/EU LVD, compliant with: EN 61131-2; Programmable Controllers (Clause 11)
RCM	Australian Radiocommunications Act, compliant with: EN 61000-6-4; Industrial Emissions
FM	FM Approved Equipment for use in Class I Division 2 Group A,B,C,D Hazardous Locations
KC	Korean Registration of Broadcasting and Communications Equipment, compliant with: Article 58-2 of Radio Waves Act, Clause 3
EAC	Russian Customs Union TR CU 020/2011 EMC Technical Regulation Russian Customs Union TR CU 004/2011 LV Technical Regulation

(1) See the Product Certification link at rok.auto/certifications for Declarations of Conformity, Certificates, and other certification details.

1756-OA8E

ControlLogix 120V AC electronically fused output module

Simplified Schematic

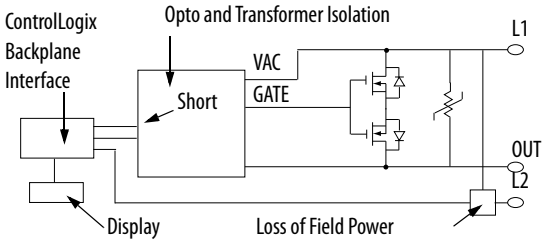

Surge Current Chart

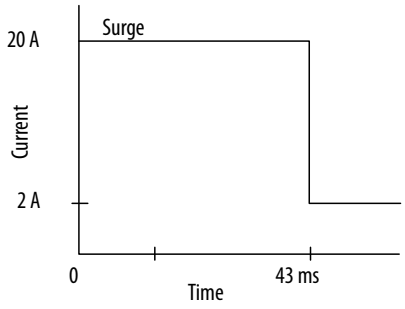

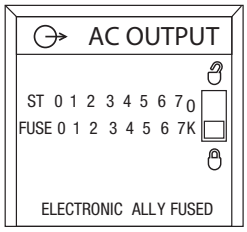

1756-OA8E

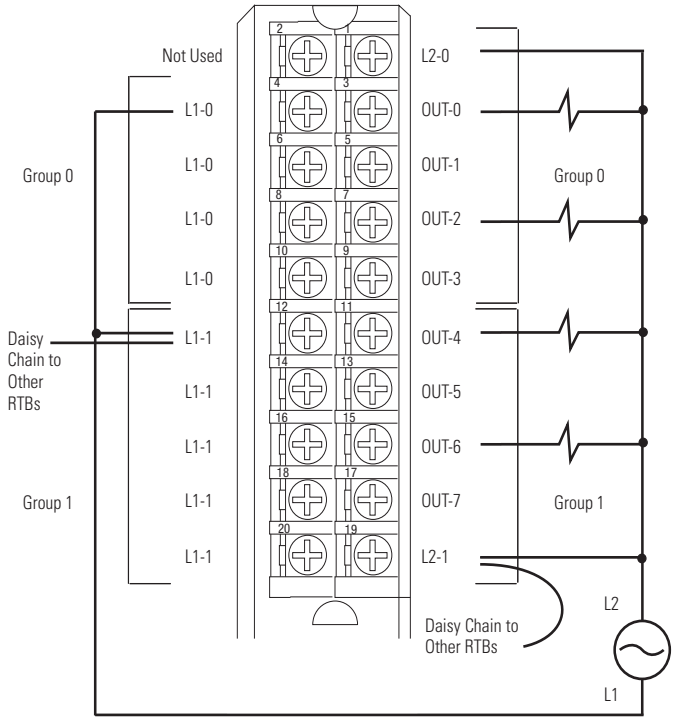

Diagnostic Specifications - 1756-OA8E

Attribute	1756-OA8E
Short trip, min	>20 A for 100 ms
Field power loss (zero cross)	Detects at 25V peak min (firmware phase locked loop)
Time stamp of diagnostics	±1 ms

Technical Specifications - 1756-OA8E

Attribute	1756-OA8E
Outputs	Eight electronic fusings (four points/group)
Pilot duty	Yes
Voltage category	120V AC 50/60 Hz
Operating voltage range[1]	74…132V AC 47…63 Hz

Technical Specifications - 1756-OA8E (continued)

Attribute	1756-OA8E
Output delay time Off to On	9.3 ms @ 60 Hz 11 ms @ 50 Hz
On to Off	9.3 ms @ 60 Hz 11 ms @ 50 Hz
Current draw @ 5.1V	200 mA
Current draw @ 24V	250 mA
Total backplane power	7.02 W
Power dissipation, max	5.5 W @ 60 °C (140 °F)
Thermal dissipation	18.76 BTU/hr
Off-state leakage current, max	3 mA per point
On-state voltage drop, max	4V peak @ 2 A
Current per point, max	2 A @ 60 °C (140 °F)
Current per group, max	4 A @ 30 °C (86 °F) linear derating 2 A @ 60 °C (140 °F) linear derating
Current per module, max	8 A @ 30 °C (86 °F) linear derating 4 A @ 60 °C (140 °F) linear derating
Surge current per point	20 A for 43 ms per point, repeatable every 2 s @ 60 °C (140 °F)
Load current, min	10 mA per point
Scheduled outputs	Synchronization within 16.7 s max, reference to the Coordinated System Time
States in Fault mode per point	Hold last state, On or Off (default is Off)
States in Program mode per point	Hold last state, On or Off (default is Off)
Isolation voltage	125V (continuous), basic insulation type, outputs-to-backplane, and output group-to-group No isolation between individual group outputs
Inhibit voltage, max	Zero crossing 25V peak
Module keying	Electronic, software configurable
Fusing	Electronically fused per point
Removable terminal block	1756-TBNH 1756-TBSH
RTB keying	User-defined mechanical
Slot width	1
Wire category(2)	1 - on signal ports
Enclosure type	None (open style)
North American temperature code	T4A

(1) UL certification for 120V 50/60Hz nominal. Rockwell Automation specified to 74…132V, 47…63 Hz.

(2) Use this conductor category information for planning conductor routing as described in the system-level installation manual. See the Industrial Automation Wiring and Grounding Guidelines, publication 1770-4.1.

Environmental Specifications - 1756-OA8E

Attribute	1756-OA8E
Temperature, operating IEC 60068-2-1 (Test Ad, Operating Cold), IEC 60068-2-2 (Test Bd, Operating Dry Heat), IEC 60068-2-14 (Test Nb, Operating Thermal Shock)	0…60 °C (32…140 °F)
Temperature, surrounding air, max	60 °C (140 °F)
Temperature, nonoperating IEC 60068-2-1 (Test Ab, Unpackaged Nonoperating Cold), IEC 60068-2-2 (Test Bb, Unpackaged Nonoperating Dry Heat), IEC 60068-2-14 (Test Na, Unpackaged Nonoperating Thermal Shock)	-40…+85 °C (-40…+185 °F)
Relative humidity IEC 60068-2-30 (Test dB, Unpackaged Damp Heat)	5…95% noncondensing
Vibration IEC 60068-2-6 (Test Fc, Operating)	2 g @ 10…500 Hz
Shock, operating IEC 60068-2-27 (Test Ea, Unpackaged Shock)	30 g
Shock, nonoperating IEC 60068-2-27 (Test Ea, Unpackaged Shock)	50 g
Emissions	IEC 61000-6-4
ESD immunity IEC 61000-4-2	6 kV contact discharges 8 kV air discharges
Radiated RF immunity IEC 61000-4-3	10V/m with 1 kHz sine-wave 80% AM from 80…2000 MHz 10V/m with 200 Hz 50% Pulse 100% AM at 900 MHz 10V/m with 200 Hz 50% Pulse 100% AM at 1890 MHz 3V/m with 1 kHz sine-wave 80% AM from 2000…2700 MHz
EFT/B immunity IEC 61000-4-4	±4 kV at 5 kHz on signal ports
Surge transient immunity IEC 61000-4-5	±1 kV line-line(DM) and ±2 kV line-earth(CM) on signal ports
Conducted RF immunity IEC 61000-4-6	10V rms with 1 kHz sine-wave 80% AM from 150 kHz…80 MHz

Certifications - 1756-OA8E

Certification (when product is marked)(1)	1756-OA8E
UL	UL Listed Industrial Control Equipment. See UL File E65584.
CSA	CSA Certified Process Control Equipment. See CSA File LR54689C. CSA Certified Process Control Equipment for Class I, Division 2 Group A,B,C,D Hazardous Locations. See CSA File LR69960C.
CE	European Union 2014/30/EU EMC Directive, compliant with: • EN 61326-1; Meas./Control/Lab., Industrial Requirements • EN 61000-6-2; Industrial Immunity • EN 61000-6-4; Industrial Emissions • EN 61131-2; Programmable Controllers (Clause 8, Zone A & B) European Union 2014/35/EU LVD, compliant with: • EN 61131-2; Programmable Controllers (Clause 11)
RCM	Australian Radiocommunications Act, compliant with: EN 61000-6-4; Industrial Emissions
FM	FM Approved Equipment for use in Class I Division 2 Group A,B,C,D Hazardous Locations
KC	Korean Registration of Broadcasting and Communications Equipment, compliant with: Article 58-2 of Radio Waves Act, Clause 3
EAC	Russian Customs Union TR CU 020/2011 EMC Technical Regulation Russian Customs Union TR CU 004/2011 LV Technical Regulation

(1) See the Product Certification link at rok.auto/certifications for Declarations of Conformity, Certificates, and other certification details.

1756-OA16, 1756-OA16K

ControlLogix 120/240V AC output module

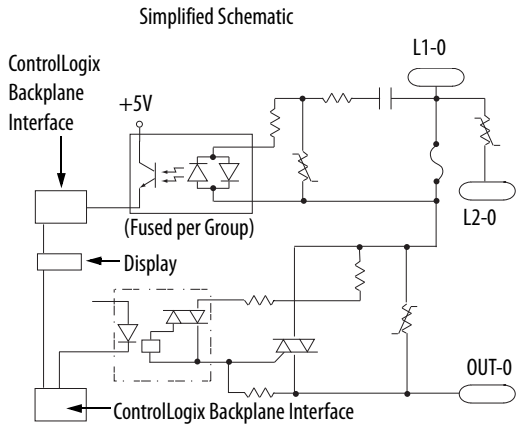

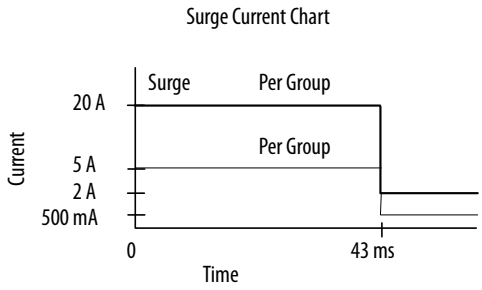

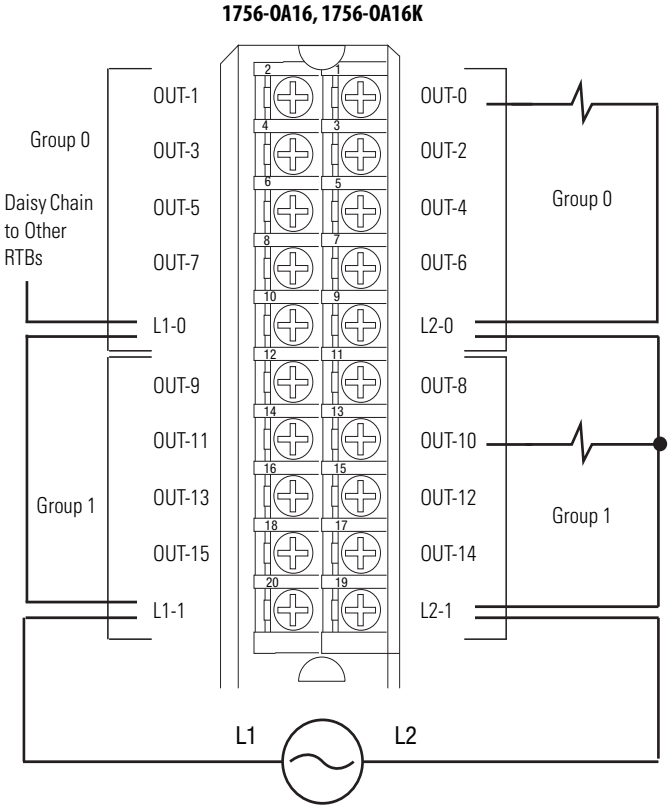

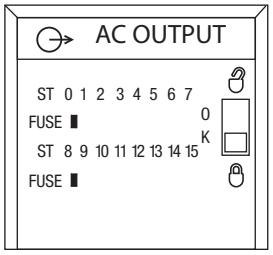

Diagnostic Specifications - 1756-OA16, 1756-OA16K

Attribute	1756-OA16, 1756-OA16K
Time stamp of diagnostics	±1 ms
Fuse blown	One fuse and indicator/group

Technical Specifications - 1756-OA16, 1756-OA16K

Attribute	1756-OA16, 1756-OA16K
Outputs	16 mechanically fused/group (8 points/group)
Pilot duty	0.5 A
Voltage category	120/240V AC 50/60 Hz
Operating voltage range[1]	74…265V AC 47…63 Hz
Output delay time Off to On	9.3 ms @ 60 Hz 11 ms @ 50 Hz
On to Off	9.3 ms @ 60 Hz 11 ms @ 50 Hz
Current draw @ 5.1V	400 mA
Current draw @ 24V	2 mA
Total backplane power	2.1 W
Power dissipation, max	6.5 W @ 60 °C (140 °F)
Thermal dissipation	22.17 BTU/hr
Off-state leakage current, max	3 mA per point
On-state voltage drop, max	1.5V @ 0.5 A 5.7V @ load current < 50 mA
Current per point, max	0.5 A @ 60 °C (140 °F)
Current per group, max	2 A @ 60 °C (140 °F)
Current per module, max	4 A @ 60 °C (140 °F)
Surge current per point	5 A for 43 ms per point, repeatable every 2 s @ 60 °C (140 °F)
Surge current per group	15 A for 43 ms per point, repeatable every 2 s @ 60 °C (140 °F)
Load current, min	10 mA per point
Commutating voltage	4 V/µs for loads > 50 mA 0.2 V/µs for loads < 50 mA[3]
Scheduled outputs	Synchronization within 16.7 s max, reference to the Coordinated System Time
States in Fault mode per point	Hold last state, On or Off (Off is default)
States in Program mode per point	Hold last state, On or Off (Off is default)
Isolation voltage	250V (continuous), basic insulation type, outputs to backplane, and output to output
Inhibit voltage, max	Zero crossing 60V peak
Module keying	Electronic, software configurable
Fusing	Mechanically fused/group, 3.15 A @ 250V AC slow blow, 1500 A interruption current, Littelfuse p/n H2153.15
Removable terminal block	1756-TBNH 1756-TBSH
RTB keying	User-defined mechanical
Slot width	1
Wire size	0.33... 2.1 mm^2 (22...14 AWG) solid or stranded copper wire rated at 90 °C (194 °F), or greater, 1.2 mm^2 (3/64 in.) insulation max

Technical Specifications - 1756-OA16, 1756-OA16K

Attribute	1756-OA16, 1756-OA16K
Wire category(2)	1 - on signal ports
Enclosure type	None (open style)
North American temperature code	T4

(1) UL certification for 120/240V 50/60 Hz nominal. Rockwell Automation specified to 74…265V, 47…63 Hz.

(2) Use this conductor category information for planning conductor routing as described in the system-level installation manual. See the Industrial Automation Wiring and Grounding Guidelines, publication 1770-4.1.

(3) The commutating dv/dt of the output voltage (OUTPUT to L2) should not exceed 0.2V/µs for loads under 50 mA. The commutating dv/dt rating of the module for loads 50…500 mA (OUTPUT to L2) is 4V/µs maximum. If the commutating dv/dt rating of the TRIAC is exceeded, the TRIAC could latch on. If the commutating dv/dt rating is exceeded in the 10…50 mA range, a resistor can be added AC across the output and L2. The purpose of this resistor is to increase the total output current to 50 mA (I=V/R). At 50 mA and above, the module has a higher commutating dv/dt rating. When adding a resistor for the output to L2, be sure it is rated for the power that it dissipates (P=(V**2)/R). If the commutating dv/dt rating is exceeded in the 50…500 mA range, the L1 AC waveform could be at fault. Be sure that the waveform is a good sinusoid, void of any anomalies such as distorted, or flattened sections.

Environmental Specifications - 1756-OA16, 1756-OA16K

Attribute	1756-OA16, 1756-OA16K
Temperature, operating IEC 60068-2-1 (Test Ad, Operating Cold), IEC 60068-2-2 (Test Bd, Operating Dry Heat), IEC 60068-2-14 (Test Nb, Operating Thermal Shock)	0…60 °C (32…140 °F)
Temperature, surrounding air, max	60 °C (140 °F)
Temperature, nonoperating IEC 60068-2-1 (Test Ab, Unpackaged Nonoperating Cold), IEC 60068-2-2 (Test Bb, Unpackaged Nonoperating Dry Heat), IEC 60068-2-14 (Test Na, Unpackaged Nonoperating Thermal Shock)	-40…+85 °C (-40…+185 °F)
Relative humidity IEC 60068-2-30 (Test dB, Unpackaged Damp Heat)	5…95% noncondensing
Vibration IEC 60068-2-6 (Test Fc, Operating)	2 g @ 10…500 Hz
Shock, operating IEC 60068-2-27 (Test Ea, Unpackaged Shock)	30 g
Shock, nonoperating IEC 60068-2-27 (Test Ea, Unpackaged Shock)	50 g
Emissions	IEC 61000-6-4
ESD immunity IEC 61000-4-2	6 kV contact discharges 8 kV air discharges
Radiated RF immunity IEC 61000-4-3	10V/m with 1 kHz sine-wave 80% AM from 80…2000 MHz 10V/m with 200 Hz 50% Pulse 100% AM @ 900 MHz 10V/m with 200 Hz 50% Pulse 100% AM @ 1890 MHz 3V/m with 1 kHz sine-wave 80% AM from 2000…2700 MHz
EFT/B immunity IEC 61000-4-4	±4 kV at 5 kHz on signal ports
Surge transient immunity IEC 61000-4-5	±1 kV line-line (DM) and ±2 kV line-earth (CM) on signal ports
Conducted RF immunity IEC 61000-4-6	10V rms with 1 kHz sine-wave 80% AM from 150 kHz…80 MHz
Oscillatory surge withstand IEEE C37.90.1	3 kV

Certifications - 1756-OA16, 1756-OA16K

Certification (when product is marked)[1]	1756-OA16, 1756-OA16K
UL	UL Listed Industrial Control Equipment. See UL File E65584.
CSA	CSA Certified Process Control Equipment. See CSA File LR54689C. CSA Certified Process Control Equipment for Class I, Division 2 Group A,B,C,D Hazardous Locations. See CSA File LR69960C.
CE	European Union 2014/30/EU EMC Directive, compliant with: • EN 61326-1; Meas./Control/Lab., Industrial Requirements • EN 61000-6-2; Industrial Immunity • EN 61000-6-4; Industrial Emissions • EN 61131-2; Programmable Controllers (Clause 8, Zone A & B) European Union 2014/35/EU LVD, compliant with: EN 61131-2; Programmable Controllers (Clause 11)
RCM	Australian Radiocommunications Act, compliant with: EN 61000-6-4; Industrial Emissions
FM	FM Approved Equipment for use in Class I Division 2 Group A,B,C,D Hazardous Locations
KC	Korean Registration of Broadcasting and Communications Equipment, compliant with: Article 58-2 of Radio Waves Act, Clause 3
EAC	Russian Customs Union TR CU 020/2011 EMC Technical Regulation Russian Customs Union TR CU 004/2011 LV Technical Regulation

(1) See the Product Certification link at rok.auto/certifications for Declarations of Conformity, Certificates, and other certification details.

1756-OA16I, 1756-OA16IK

ControlLogix 120/240V AC isolated output module

Simplified Schematic

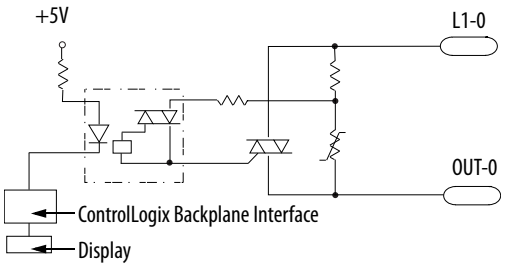

Surge Current Chart

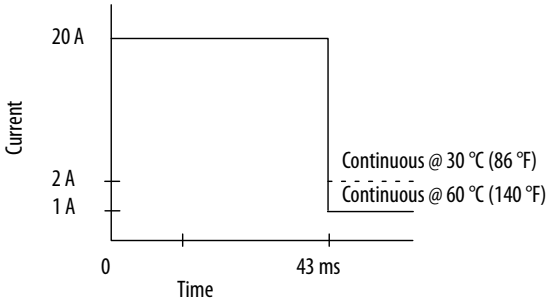

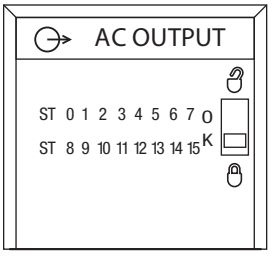

1756-OA161, 1756-OA16IK

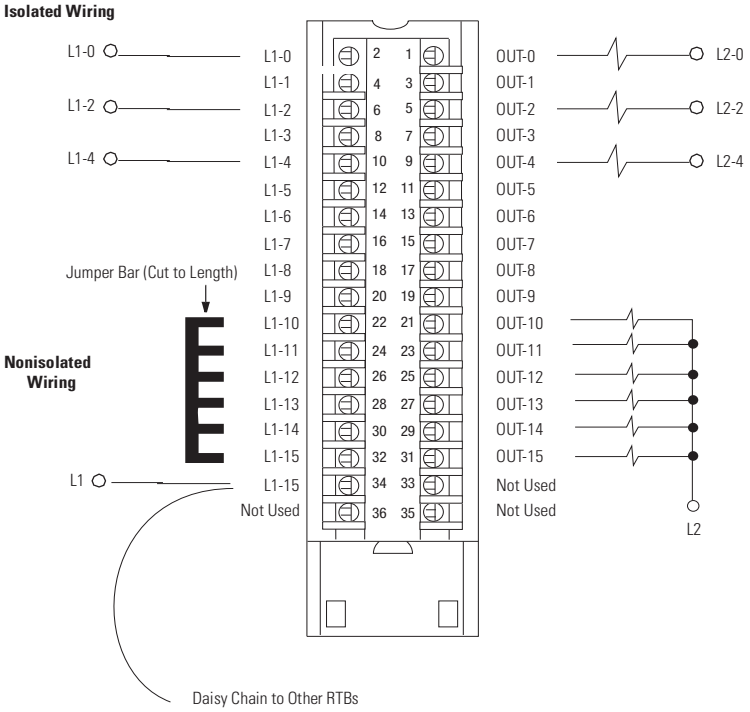

Additional jumper bars are available as catalog number 1756-JMPR.

Technical Specifications - 1756-OA16I, 1756-OA16IK

Attribute	1756-OA16I, 1756-OA16IK
Outputs	16 individually isolated
Pilot duty	Yes
Voltage category	120/240V AC 50/60 Hz
Operating voltage range[1]	74…265V AC 47…63 Hz
Output delay time Off to On	9.3 ms @ 60 Hz 11 ms @ 50 Hz
On to Off	9.3 ms @ 60 Hz 11 ms @ 50 Hz
Current draw @ 5.1V	300 mA
Current draw @ 24V	2.5 mA
Total backplane power	1.59 W
Power dissipation, max	5.5 W @ 60 °C (140 °F)

Technical Specifications - 1756-OA16I, 1756-OA16IK

Attribute	1756-OA16I, 1756-OA16IK
Thermal dissipation	18.76 BTU/hr
Off-state leakage current, max	3 mA per point
On-state voltage drop, max	1.5V peak @ 2 A 6V peak @ load current < 50 mA
Current per point, max	2 A @ 30 °C (86 °F) linear derating 1 A @ 60 °C (140 °F) linear derating
Current per module, max	5 A @ 30 °C (86 °F) linear derating 4 A @ 60 °C (140 °F) linear derating
Surge current per point	20 A for 43 ms per point, repeatable every 2 s @ 60 °C (140 °F)
Load current, min	10 mA per point
Commutating voltage	4 V/µs for loads > 50 mA 0.2 V/µs for loads < 50 mA(2)
Scheduled outputs	Synchronization within 16.7 s max, reference to the Coordinated System Time
States in Fault mode per point	Hold last state, On or Off (Off is default)
States in Program mode per point	Hold last state, On or Off (Off is default)
Isolation voltage	250V (continuous), basic insulation type, outputs-to-backplane, and output-to-output
Inhibit voltage, max	Zero crossing 60V peak
Module keying	Electronic, software configurable
Fusing	Not protected. A fused IFM is recommended to help protect outputs
Removable terminal block	1756-TBCH 1756-TBS6H
RTB keying	User-defined mechanical
Slot width	1
Wire category	1(3)
Enclosure type	None (open style)
North American temperature code	T4A

(1) UL certification for 120/240V 50/60 Hz nominal. Rockwell Automation specified to 74…265V, 47…63 Hz.

(2) The commutating dv/dt of the output voltage (OUTPUT to L2) should not exceed 0.2V/µs for loads under 50 mA. The commutating dv/dt rating of the module for loads 50…500 mA (OUTPUT to L2) is 4V/µs maximum. If the commutating dv/dt rating of the TRIAC is exceeded, the TRIAC could latch on. If the commutating dv/dt rating is exceeded in the 10…50 mA range, a resistor can be added AC across the output and L2. The purpose of this resistor is to increase the total output current to 50 mA (I=V/R). At 50 mA and above, the module has a higher commutating dv/dt rating. When adding a resistor for the output to L2, be sure it is rated for the power that it dissipates (P=(V**2)/R). If the commutating dv/dt rating is exceeded in the 50…500 mA range, the L1 AC waveform could be at fault. Be sure that the waveform is a good sinusoid, void of any anomalies such as distorted, or flattened sections.

(3) Use this conductor category information for planning conductor routing as described in the system-level installation manual. See the Industrial Automation Wiring and Grounding Guidelines, publication 1770-4.1.

Environmental Specifications - 1756-OA16I, 1756-OA16IK

Attribute	1756-OA16I, 1756-OA16IK
Temperature, operating IEC 60068-2-1 (Test Ad, Operating Cold), IEC 60068-2-2 (Test Bd, Operating Dry Heat), IEC 60068-2-14 (Test Nb, Operating Thermal Shock)	0…60 °C (32…140 °F)
Temperature, surrounding air, max	60 °C (140 °F)
Temperature, nonoperating IEC 60068-2-1 (Test Ab, Unpackaged Nonoperating Cold), IEC 60068-2-2 (Test Bb, Unpackaged Nonoperating Dry Heat), IEC 60068-2-14 (Test Na, Unpackaged Nonoperating Thermal Shock)	-40…+85 °C (-40…+185 °F)

Environmental Specifications - 1756-OA16I, 1756-OA16IK

Attribute	1756-OA16I, 1756-OA16IK
Relative humidity IEC 60068-2-30 (Test dB, Unpackaged Damp Heat)	5…95% noncondensing
Vibration IEC 60068-2-6 (Test Fc, Operating)	2 g @ 10…500 Hz
Shock, operating IEC 60068-2-27 (Test Ea, Unpackaged Shock)	30 g
Shock, nonoperating IEC 60068-2-27 (Test Ea, Unpackaged Shock)	50 g
Emissions	IEC 61000-6-4
ESD immunity IEC 61000-4-2	6 kV contact discharges 8 kV air discharges
Radiated RF immunity IEC 61000-4-3	10V/m with 1 kHz sine-wave 80% AM from 80…2000 MHz 10V/m with 200 Hz 50% Pulse 100% AM @ 900 MHz 10V/m with 200 Hz 50% Pulse 100% AM @ 1890 MHz 3V/m with 1 kHz sine-wave 80% AM from 2000…2700 MHz
EFT/B immunity IEC 61000-4-4	±4 kV at 5 kHz on signal ports
Surge transient immunity IEC 61000-4-5	±1 kV line-line (DM) and ±2 kV line-earth (CM) on signal ports
Conducted RF immunity IEC 61000-4-6	10V rms with 1 kHz sine-wave 80% AM from 150 kHz…80 MHz
Oscillatory surge withstand IEEE C37.90.1	3 kV

Certifications - 1756-OA16I, 1756-OA16IK

Certification (when product is marked)(1)	1756-OA16I, 1756-OA16IK
UL	UL Listed Industrial Control Equipment. See UL File E65584.
CSA	CSA Certified Process Control Equipment. See CSA File LR54689C. CSA Certified Process Control Equipment for Class I, Division 2 Group A,B,C,D Hazardous Locations. See CSA File LR69960C.
CE	European Union 2014/30/EU EMC Directive, compliant with: • EN 61326-1; Meas./Control/Lab., Industrial Requirements • EN 61000-6-2; Industrial Immunity • EN 61000-6-4; Industrial Emissions • EN 61131-2; Programmable Controllers (Clause 8, Zone A & B) European Union 2014/35/EU LVD, compliant with: EN 61131-2; Programmable Controllers (Clause 11)
RCM	Australian Radiocommunications Act, compliant with: EN 61000-6-4; Industrial Emissions
FM	FM Approved Equipment for use in Class I Division 2 Group A,B,C,D Hazardous Locations
KC	Korean Registration of Broadcasting and Communications Equipment, compliant with: Article 58-2 of Radio Waves Act, Clause 3
EAC	Russian Customs Union TR CU 020/2011 EMC Technical Regulation Russian Customs Union TR CU 004/2011 LV Technical Regulation

(1) See the Product Certification link at rok.auto/certifications for Declarations of Conformity, Certificates, and other certification details.

1756-OB8

ControlLogix DC (10...30V) output module

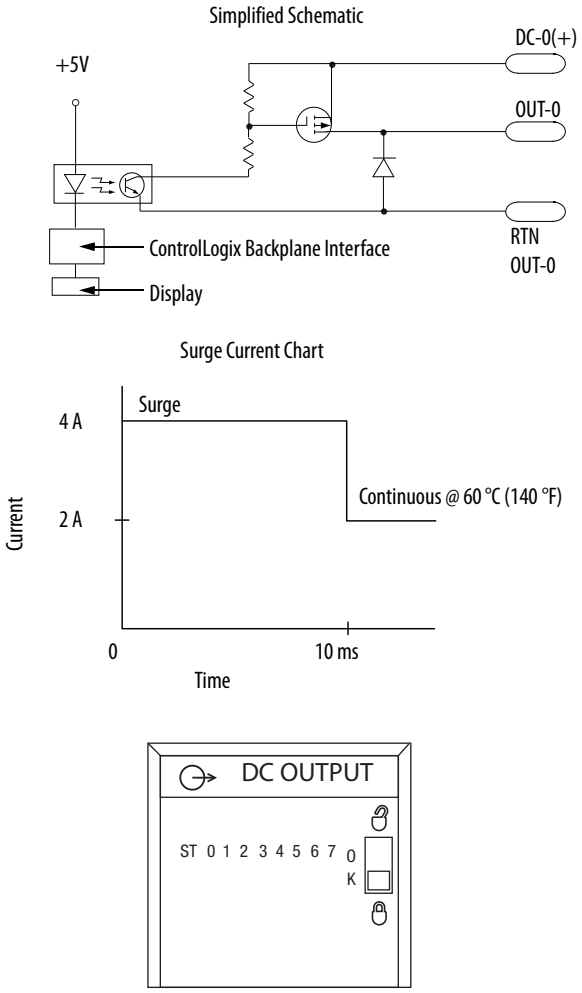

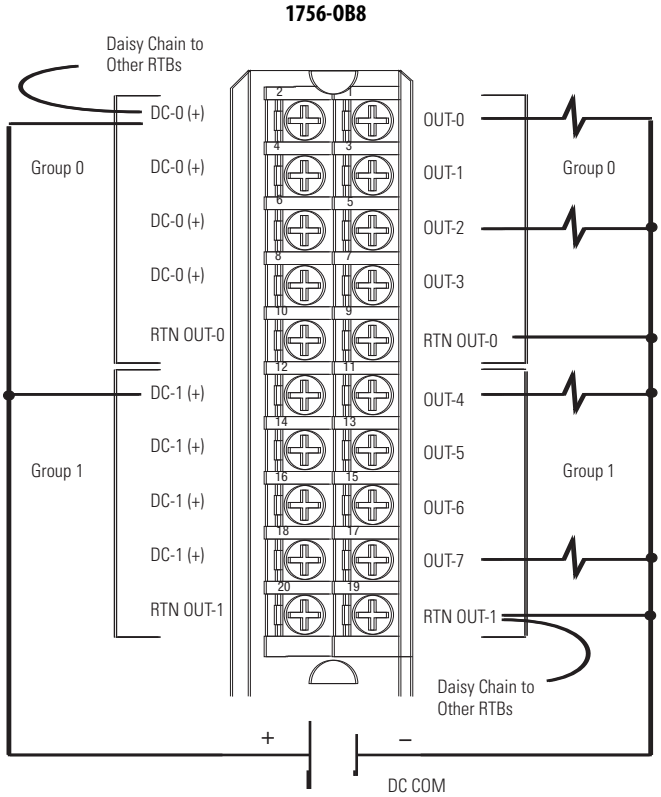

Technical Specifications - 1756-OB8

Attribute	1756-OB8
Outputs	8 (4 points/common)
Pilot duty	Yes
Voltage category	12/24V DC source
Operating voltage range	10…30V DC
Output delay time Off to On On to Off	 1 ms max 2 ms max
Current draw @ 5.1V	165 mA
Current draw @ 24V	2 mA
Total backplane power	0.89 W
Power dissipation, max	2.5 W @ 60 °C (140 °F)
Thermal dissipation	8.53 BTU/hr

Technical Specifications - 1756-OB8 (continued)

Attribute	1756-OB8
Off-state leakage current, max	1 mA per point
On-state voltage drop, max	1.2V DC @ 2 A
Current per point, max	2 A @ 60 °C (140 °F)
Current per module, max	8 A @ 60 °C (140 °F)
Surge current per point	4 A for 10 ms each, repeatable every 1 s @ 60 °C (140 °F)
Load current, min	2 mA per point
Scheduled outputs	Synchronization within 16.7 s max, reference to the Coordinated System Time
States in Fault mode per point	Hold last state, On or Off (Off is default)
States in Program mode per point	Hold last state, On or Off (Off is default)
Isolation voltage	250V (continuous), basic insulation type, outputs-to-backplane, and output group-to-group No isolation between individual group outputs
Module keying	Electronic, software configurable
Fusing	Not protected. A fused IFM is recommended to help protect outputs
Removable terminal block	1756-TBNH 1756-TBSH
RTB keying	User-defined mechanical
Slot width	1
Wire category	1(1)
Enclosure type	None (open-style)
North American temperature code	T4A
IEC temperature code	T4

(1) Use this conductor category information for planning conductor routing as described in the system-level installation manual. See the Industrial Automation Wiring and Grounding Guidelines, publication 1770-4.1.

Environmental Specifications - 1756-OB8

Attribute	1756-OB8
Temperature, operating IEC 60068-2-1 (Test Ad, Operating Cold), IEC 60068-2-2 (Test Bd, Operating Dry Heat), IEC 60068-2-14 (Test Nb, Operating Thermal Shock)	0…60 °C (32…140 °F)
Temperature, surrounding air, max	60 °C (140 °F)
Temperature, nonoperating IEC 60068-2-1 (Test Ab, Unpackaged Nonoperating Cold), IEC 60068-2-2 (Test Bb, Unpackaged Nonoperating Dry Heat), IEC 60068-2-14 (Test Na, Unpackaged Nonoperating Thermal Shock)	-40…+85 °C (-40…+185 °F)
Relative humidity IEC 60068-2-30 (Test dB, Unpackaged Damp Heat)	5…95% noncondensing
Vibration IEC 60068-2-6 (Test Fc, Operating)	2 g @ 10…500 Hz
Shock, operating IEC 60068-2-27 (Test Ea, Unpackaged Shock)	30 g
Shock, nonoperating IEC 60068-2-27 (Test Ea, Unpackaged Shock)	50 g
Emissions	IEC 61000-6-4

Environmental Specifications - 1756-OB8 (continued)

Attribute	1756-OB8
ESD immunity IEC 61000-4-2	6 kV contact discharges 8 kV air discharges
Radiated RF immunity IEC 61000-4-3	10V/m with 1 kHz sine-wave 80% AM from 80…2000 MHz 10V/m with 200 Hz 50% Pulse 100% AM @ 900 MHz 10V/m with 200 Hz 50% Pulse 100% AM @ 1890 MHz 3V/m with 1 kHz sine-wave 80% AM from 2000…2700 MHz
EFT/B immunity IEC 61000-4-4	±4 kV at 5 kHz on signal ports
Surge transient immunity IEC 61000-4-5	±1 kV line-line (DM) and ±2 kV line-earth (CM) on signal ports
Conducted RF immunity IEC 61000-4-6	10V rms with 1 kHz sine-wave 80% AM from 150 kHz…80 MHz

Certifications - 1756-OB8

Certification (when product is marked)(1)	1756-OB8
UL	UL Listed Industrial Control Equipment. See UL File E65584.
CSA	CSA Certified Process Control Equipment. See CSA File LR54689C. CSA Certified Process Control Equipment for Class I, Division 2 Group A,B,C,D Hazardous Locations. See CSA File LR69960C.
CE	European Union 2014/30/EU EMC Directive, compliant with: • EN 61326-1; Meas./Control/Lab., Industrial Requirements • EN 61000-6-2; Industrial Immunity • EN 61000-6-4; Industrial Emissions • EN 61131-2; Programmable Controllers (Clause 8, Zone A & B) European Union 2014/35/EU LVD, compliant with: EN 61131-2; Programmable Controllers (Clause 11)
RCM	Australian Radiocommunications Act, compliant with: EN 61000-6-4; Industrial Emissions
Ex	European Union 2014/34/EU ATEX Directive, compliant with: • EN 60079-15; Potentially Explosive Atmospheres, Protection "n" • EN 60079-0; General Requirements II 3 G Ex nA IIC T4 X Gc
FM	FM Approved Equipment for use in Class I Division 2 Group A,B,C,D Hazardous Locations
KC	Korean Registration of Broadcasting and Communications Equipment, compliant with: Article 58-2 of Radio Waves Act, Clause 3
EAC	Russian Customs Union TR CU 020/2011 EMC Technical Regulation Russian Customs Union TR CU 004/2011 LV Technical Regulation

(1) See the Product Certification link at rok.auto/certifications for Declarations of Conformity, Certificates, and other certification details.

1756-OB8EI

ControlLogix DC (10...30V) electronically fused, isolated output module

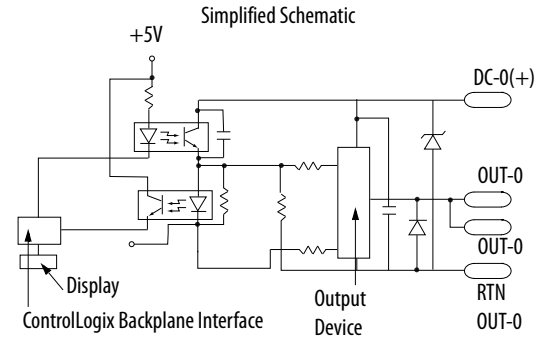

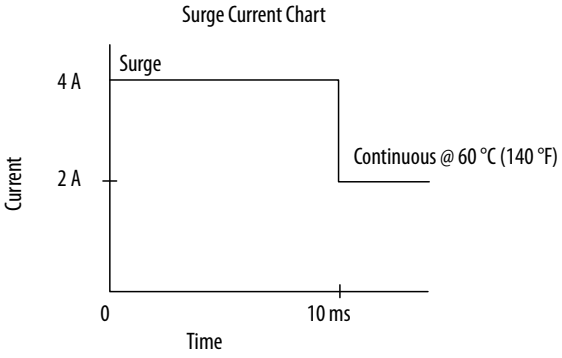

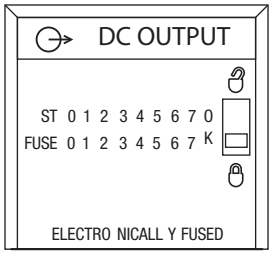

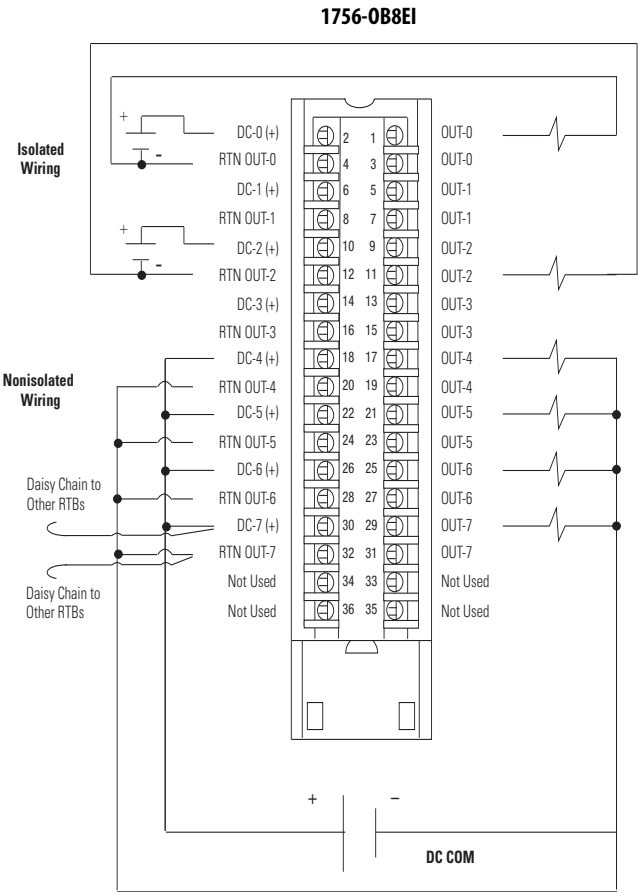

Diagnostic Specifications - 1756-OB8EI

Attribute	1756-OB8EI
Short trip	> 4.5 A for 500 µs max (output on, then short) > 4.5 A for 1.5 ms max (output on into short)
Time stamp of diagnostics	±1 ms

Technical Specifications - 1756-OB8EI

Attribute	1756-OB8EI
Outputs	8 individually isolated
Pilot duty	Yes
Voltage category	12/24V DC source
Operating voltage range	10…30V DC

Technical Specifications - 1756-OB8EI (continued)

Attribute	1756-OB8EI
Output delay time Off to On On to Off	 1 ms max 5 ms max
Current draw @ 5.1V	250 mA
Current draw @ 24V	2 mA
Total backplane power	1.30 W
Power dissipation, max	4.7 W @ 60 °C (140 °F)
Thermal dissipation	16.03 BTU/hr
Off-state leakage current, max	1 mA per point
On-state voltage drop, max	1.2V DC @ 2 A
Current per point, max	2 A @ 60 °C (140 °F)
Current per module, max	10 A @ 60 °C (140 °F) 16 A @ 55 °C (131 °F) linear derating
Surge current per point	4 A for 10 ms each, repeatable every 2 s
Load current, min	3 mA
Scheduled outputs	Synchronization within 16.7 s max, reference to the Coordinated System Time
States in Fault mode per point	Hold last state, On or Off (Off is default)
States in Program mode per point	Hold last state, On or Off (Off is default)
Isolation voltage	250V (continuous), basic insulation type, outputs-to-backplane, and output-to-output
Module keying	Electronic, software configurable
Fusing	Electronically fused per point
Removable terminal block	1756-TBCH 1756-TBS6H
RTB keying	User-defined mechanical
Slot width	1
Wire category	1(1)
Enclosure type	None (open-style)
North American temperature code	T4A
IEC temperature code	T4

(1) Use this conductor category information for planning conductor routing as described in the system-level installation manual. See the Industrial Automation Wiring and Grounding Guidelines, publication 1770-4.1.

Environmental Specifications - 1756-OB8EI

Attribute	1756-OB8EI
Temperature, operating IEC 60068-2-1 (Test Ad, Operating Cold), IEC 60068-2-2 (Test Bd, Operating Dry Heat), IEC 60068-2-14 (Test Nb, Operating Thermal Shock)	0…60 °C (32…140 °F)
Temperature, surrounding air, max	60 °C (140 °F)
Temperature, nonoperating IEC 60068-2-1 (Test Ab, Unpackaged Nonoperating Cold), IEC 60068-2-2 (Test Bb, Unpackaged Nonoperating Dry Heat), IEC 60068-2-14 (Test Na, Unpackaged Nonoperating Thermal Shock)	-40…+85 °C (-40…+185 °F)

Environmental Specifications - 1756-OB8EI (continued)

Attribute	1756-OB8EI
Relative humidity IEC 60068-2-30 (Test dB, Unpackaged Damp Heat)	5…95% noncondensing
Vibration IEC 60068-2-6 (Test Fc, Operating)	2 g @ 10…500 Hz
Shock, operating IEC 60068-2-27 (Test Ea, Unpackaged Shock)	30 g
Shock, nonoperating IEC 60068-2-27 (Test Ea, Unpackaged Shock)	50 g
Emissions	IEC 61000-6-4
ESD immunity IEC 61000-4-2	6 kV contact discharges 8 kV air discharges
Radiated RF immunity IEC 61000-4-3	10V/m with 1 kHz sine-wave 80% AM from 80…2000 MHz 10V/m with 200 Hz 50% Pulse 100% AM @ 900 MHz 10V/m with 200 Hz 50% Pulse 100% AM @ 1890 MHz 3V/m with 1 kHz sine-wave 80% AM from 2000…2700 MHz
EFT/B immunity IEC 61000-4-4	±4 kV at 5 kHz on signal ports
Surge transient immunity IEC 61000-4-5	±1 kV line-line (DM) and ±2 kV line-earth (CM) on signal ports
Conducted RF immunity IEC 61000-4-6	10V rms with 1 kHz sine-wave 80% AM from 150 kHz…80 MHz

Certifications - 1756-OB8EI

Certification (when product is marked)(1)	1756-OB8EI
UL	UL Listed Industrial Control Equipment. See UL File E65584.
CSA	CSA Certified Process Control Equipment. See CSA File LR54689C. CSA Certified Process Control Equipment for Class I, Division 2 Group A,B,C,D Hazardous Locations. See CSA File LR69960C.
CE	European Union 2014/30/EU EMC Directive, compliant with: • EN 61326-1; Meas./Control/Lab., Industrial Requirements • EN 61000-6-2; Industrial Immunity • EN 61000-6-4; Industrial Emissions • EN 61131-2; Programmable Controllers (Clause 8, Zone A & B) European Union 2014/35/EU LVD, compliant with: EN 61131-2; Programmable Controllers (Clause 11)
RCM	Australian Radiocommunications Act, compliant with: EN 61000-6-4; Industrial Emissions
Ex	European Union 2014/34/EU ATEX Directive, compliant with: • EN 60079-15; Potentially Explosive Atmospheres, Protection "n" • EN 60079-0; General Requirements II 3 G Ex nA IIC T4 X Gc
FM	FM Approved Equipment for use in Class I Division 2 Group A,B,C,D Hazardous Locations
KC	Korean Registration of Broadcasting and Communications Equipment, compliant with: Article 58-2 of Radio Waves Act, Clause 3
EAC	Russian Customs Union TR CU 020/2011 EMC Technical Regulation Russian Customs Union TR CU 004/2011 LV Technical Regulation

(1) See the Product Certification link at rok.auto/certifications for Declarations of Conformity, Certificates, and other certification details.

1756-OB8I

ControlLogix DC (10...30V) isolated output module

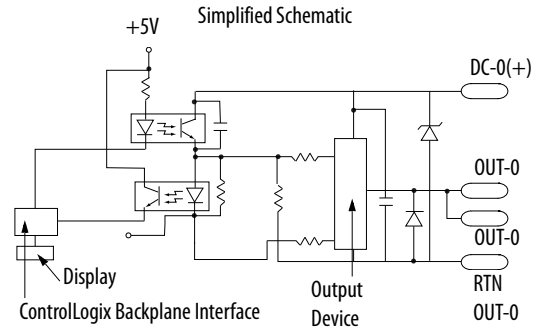

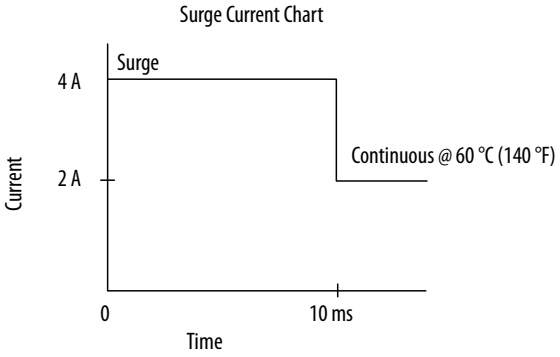

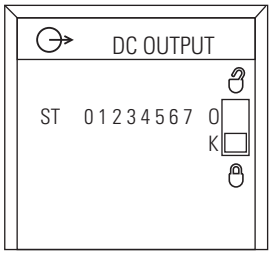

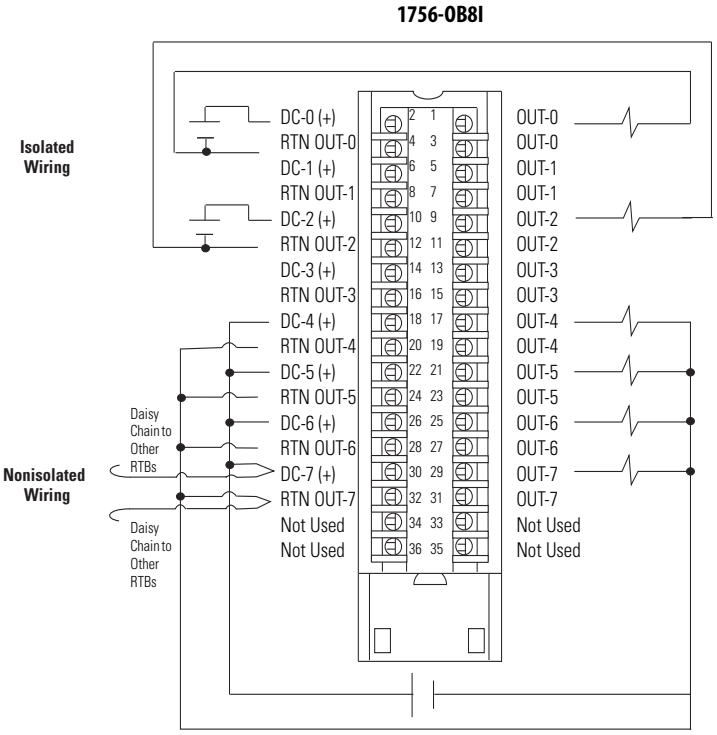

Technical Specifications - 1756-OB8I

Attribute	1756-OB8I
Outputs	8 individually isolated
Pilot duty	Yes
Voltage category	12/24V DC source
Operating voltage range	10…30V DC
Output delay time Off to On On to Off	 1 ms max 2 ms max
Current draw @ 5.1V	165 mA
Current draw @ 24V	2 mA
Total backplane power	0.89 W
Power dissipation, max	4.6 W @ 60 °C (140 °F)

Technical Specifications - 1756-OB8I (continued)

Attribute	1756-OB8I
Thermal dissipation	15.70 BTU/hr
Off-state leakage current, max	0.5 mA per point
On-state voltage drop, max	0.5V DC @ 2 A
Current per point, max	2 A @ 60 °C (140 °F)
Current per module, max	16 A @ 60 °C (140 °F)
Surge current per point	4 A for 10 ms each, repeatable every 1 s @ 60 °C (140 °F)
Load current, min	2 mA
Scheduled outputs	Synchronization within 16.7 s max, reference to the Coordinated System Time
States in Fault mode per point	Hold last state, On or Off (Off is default)
States in Program mode per point	Hold last state, On or Off (Off is default)
Isolation voltage	250V (continuous), reinforced insulation type, outputs-to-backplane 250V (continuous), basic insulation type, output-to-output
Module keying	Electronic, software configurable
Fusing	Not protected. A fused IFM is recommended to help protect outputs.
Removable terminal block	1756-TBCH 1756-TBS6H
RTB keying	User-defined mechanical
Slot width	1
Wire category	1(1)
Enclosure type	None (open-style)
North American temperature code	T4A

(1) Use this conductor category information for planning conductor routing as described in the system-level installation manual. See the Industrial Automation Wiring and Grounding Guidelines, publication 1770-4.1.

Environmental Specifications - 1756-OB8I

Attribute	1756-OB8I
Temperature, operating IEC 60068-2-1 (Test Ad, Operating Cold), IEC 60068-2-2 (Test Bd, Operating Dry Heat), IEC 60068-2-14 (Test Nb, Operating Thermal Shock)	0…60 °C (32…140 °F)
Temperature, surrounding air, max	60 °C (140 °F)
Temperature, nonoperating IEC 60068-2-1 (Test Ab, Unpackaged Nonoperating Cold), IEC 60068-2-2 (Test Bb, Unpackaged Nonoperating Dry Heat), IEC 60068-2-14 (Test Na, Unpackaged Nonoperating Thermal Shock)	-40…+85 °C (-40…+185 °F)
Relative humidity IEC 60068-2-30 (Test dB, Unpackaged Damp Heat)	5…95% noncondensing
Vibration IEC 60068-2-6 (Test Fc, Operating)	2 g @ 10…500 Hz
Shock, operating IEC 60068-2-27 (Test Ea, Unpackaged Shock)	30 g
Shock, nonoperating IEC 60068-2-27 (Test Ea, Unpackaged Shock)	50 g
Emissions	IEC 61000-6-4

Environmental Specifications - 1756-OB8I (continued)

Attribute	1756-OB8I
ESD immunity IEC 61000-4-2	6 kV contact discharges 8k V air discharges
Radiated RF immunity IEC 61000-4-3	10V/m with 1 kHz sine-wave 80% AM from 80…2000 MHz 10V/m with 200 Hz 50% Pulse 100% AM @ 900 MHz 10V/m with 200 Hz 50% Pulse 100% AM @ 1890 MHz 3V/m with 1k Hz sine-wave 80% AM from 2000…2700 MHz
EFT/B immunity IEC 61000-4-4	±4 kV at 5 kHz on signal ports
Surge transient immunity IEC 61000-4-5	±1 kV line-line (DM) and ±2 kV line-earth (CM) on signal ports
Conducted RF immunity IEC 61000-4-6	10V rms with 1 kHz sine-wave 80% AM from 150 kHz…80 MHz

Certifications - 1756-OB8I

Certification (when product is marked)[1]	1756-OB8I
UL	UL Listed Industrial Control Equipment. See UL File E65584.
CSA	CSA Certified Process Control Equipment. See CSA File LR54689C. CSA Certified Process Control Equipment for Class I, Division 2 Group A,B,C,D Hazardous Locations. See CSA File LR69960C.
CE	European Union 2014/30/EU EMC Directive, compliant with: • EN 61326-1; Meas./Control/Lab., Industrial Requirements • EN 61000-6-2; Industrial Immunity • EN 61000-6-4; Industrial Emissions • EN 61131-2; Programmable Controllers (Clause 8, Zone A & B) European Union 2014/35/EU LVD, compliant with: EN 61131-2; Programmable Controllers (Clause 11)
RCM	Australian Radiocommunications Act, compliant with: EN 61000-6-4; Industrial Emissions
KC	Korean Registration of Broadcasting and Communications Equipment, compliant with: Article 58-2 of Radio Waves Act, Clause 3
EAC	Russian Customs Union TR CU 020/2011 EMC Technical Regulation Russian Customs Union TR CU 004/2011 LV Technical Regulation

(1) See the Product Certification link at rok.auto/certifications for Declarations of Conformity, Certificates, and other certification details.

1756-OB16D, 1756-OB16DK

ControlLogix DC (19.2...30V) diagnostic output module

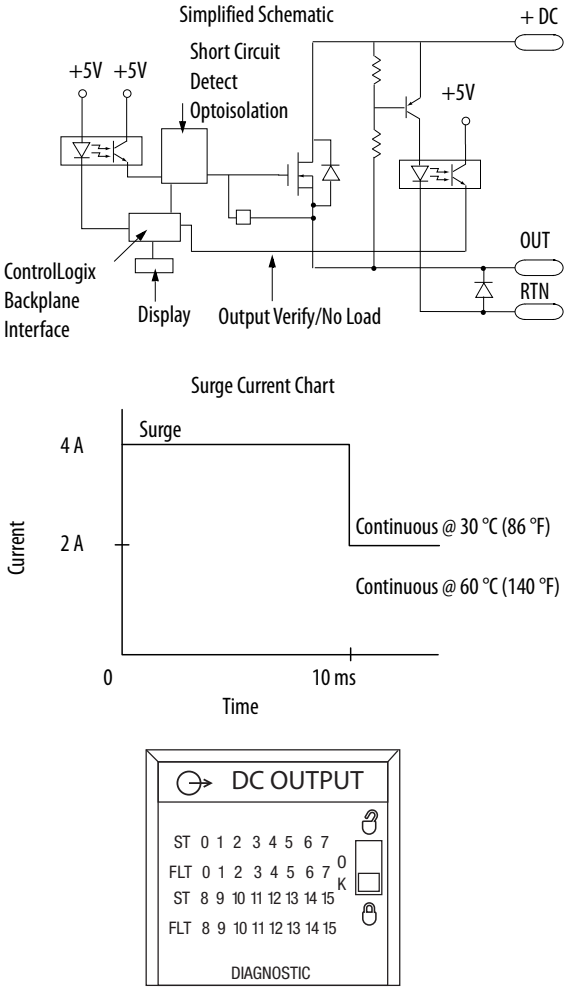

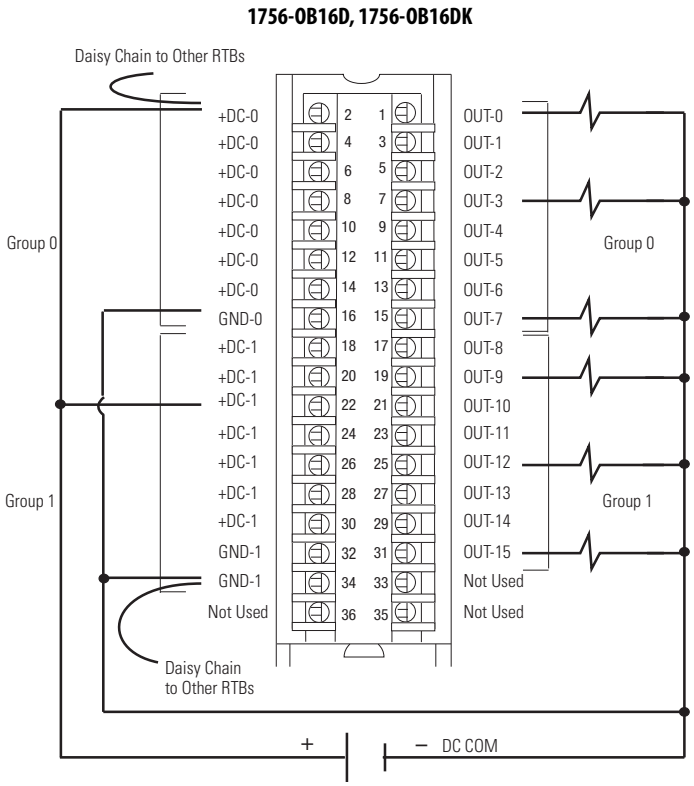

Diagnostic Specifications - 1756-OB16D, 1756-OB16DK

Attribute	1756-OB16D, 1756-OB16DK
Short trip	8 A for 180 ms, min 10 A for 120 ms, min
No load	Off-state detection only
Output verification	On-state detection only
Pulse test	Configurable maximum pulse width
Time stamp of diagnostics	±1 ms

Technical Specifications - 1756-OB16D, 1756-OB16DK

Attribute	1756-OB16D, 1756-OB16DK
Outputs	16 diagnostic (8 points/group)
Pilot duty (DC-13SQ)	2A @ 30°C (86 °F) 1A @ 60°C (140 °F)
Voltage category	24V DC source
Operating voltage range	19.2…30V DC
Output delay time Off to On On to Off	 60 µs nom/1 ms max 630 µs nom/5 ms max
Current draw @ 5.1V	250 mA
Current draw @ 24V	140 mA
Total backplane power	4.64 W
Power dissipation, max	3.3 W @ 60 °C (140 °F)
Thermal dissipation	11.25 BTU/hr
Off-state leakage current per point, max	1 mA per point
On-state voltage drop, max	1.2V DC @ 2 A
Current per point, max	2 A @ 30 °C (86 °F) linear derating 1 A @ 60 °C (140 °F) linear derating
Current per module, max	8 A @ 30 °C (86 °F) linear derating 4 A @ 60 °C (140 °F) linear derating
Surge current per point	4 A for 10 ms per point, repeatable every 1 s
Load current, min	3 mA per point
Scheduled outputs	Synchronization within 16.7 s max, reference to the Coordinated System Time
States in Fault mode per point	Hold last state, On or Off (Off is default)
States in Program mode per point	Hold last state, On or Off (Off is default)
Isolation voltage	250V (continuous), basic insulation type, outputs-to-backplane, and output group-to-group No isolation between individual group outputs
Module keying	Electronic, software configurable
Fusing	Electronically fused per point
Removable terminal block	1756-TBCH 1756-TBS6H
RTB keying	User-defined mechanical
Slot width	1
Wire category	1(1)
Enclosure type	None (open-style)
North American temperature code	T4A
IEC temperature code	T4

(1) Use this conductor category information for planning conductor routing as described in the system-level installation manual. See the Industrial Automation Wiring and Grounding Guidelines, publication 1770-4.1.

Environmental Specifications - 1756-OB16D, 1756-OB16DK

Attribute	1756-OB16D, 1756-OB16DK
Temperature, operating IEC 60068-2-1 (Test Ad, Operating Cold), IEC 60068-2-2 (Test Bd, Operating Dry Heat), IEC 60068-2-14 (Test Nb, Operating Thermal Shock)	0 °C < Ta < 60 °C (32 °F < Ta < 140 °F)
Temperature, surrounding air, max	60 °C (140 °F)
Temperature, nonoperating IEC 60068-2-1 (Test Ab, Unpackaged Nonoperating Cold), IEC 60068-2-2 (Test Bb, Unpackaged Nonoperating Dry Heat), IEC 60068-2-14 (Test Na, Unpackaged Nonoperating Thermal Shock	-40…+85 °C (-40…+185 °F)
Relative humidity IEC 60068-2-30 (Test dB, Unpackaged Damp Heat)	5…95% noncondensing
Vibration IEC 60068-2-6 (Test Fc, Operating)	2 g @ 10…500 Hz
Shock, operating IEC 60068-2-27 (Test Ea, Unpackaged Shock)	30 g
Shock, nonoperating IEC 60068-2-27 (Test Ea, Unpackaged Shock)	50 g
Emissions	IEC 61000-6-4
ESD immunity IEC 61000-4-2	6 kV contact discharges 8 kV air discharges
Radiated RF immunity IEC 61000-4-3	10V/m with 1 kHz sine-wave 80% AM from 80…2000 MHz 10V/m with 200 Hz 50% Pulse 100% AM @ 900 MHz 10V/m with 200 Hz 50% Pulse 100% AM @ 1890 MHz 3V/m with 1k Hz sine-wave 80% AM from 2000…2700 MHz
EFT/B immunity IEC 61000-4-4	±4 kV at 5 kHz on signal ports
Surge transient immunity IEC 61000-4-5	±1 kV line-line (DM) and ±2 kV line-earth (CM) on signal ports
Conducted RF immunity IEC 61000-4-6	10V rms with 1 kHz sine-wave 80% AM from 150 kHz…80 MHz

Certifications - 1756-OB16D, 1756-OB16DK

Certification (when product is marked)[1]	1756-OB16D, 1756-OB16DK
UL	UL Listed Industrial Control Equipment. See UL File E65584.
CSA	CSA Certified Process Control Equipment. See CSA File LR54689C. CSA Certified Process Control Equipment for Class I, Division 2 Group A,B,C,D Hazardous Locations. See CSA File LR69960C.
CE	European Union 2004/108/EC EMC Directive, compliant with: • EN 61326-1; Meas./Control/Lab., Industrial Requirements • EN 61000-6-2; Industrial Immunity • EN 61000-6-4; Industrial Emissions • EN 61131-2; Programmable Controllers (Clause 8, Zone A & B) European Union 2014/35/EU LVD, compliant with: • EN 61131-2; Programmable Controllers (Clause 11)
RCM	Australian Radiocommunications Act, compliant with: • EN 61000-6-4; Industrial Emissions
Ex	European Union 2014/34/EU ATEX Directive, compliant with: • EN 60079-15; Potentially Explosive Atmospheres, Protection "n" • EN 60079-0; General Requirements • II 3 G Ex nA IIC T4 X
FM	FM Approved Equipment for use in Class I Division 2 Group A,B,C,D Hazardous Locations
KC	Korean Registration of Broadcasting and Communications Equipment, compliant with: Article 58-2 of Radio Waves Act, Clause 3
EAC	Russian Customs Union TR CU 020/2011 EMC Technical Regulation Russian Customs Union TR CU 004/2011 LV Technical Regulation

(1) See the Product Certification link at rok.auto/certifications for Declarations of Conformity, Certificates, and other certification details.

1756-OB16E, 1756-OB16EK

ControlLogix DC (10...31.2V) electronically fused output module

Simplified Schematic

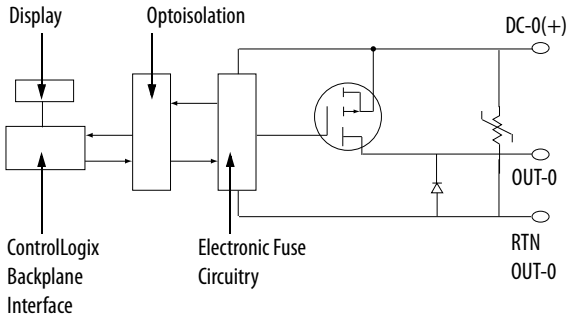

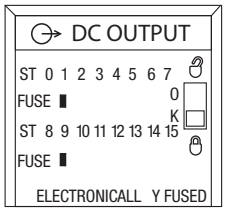

1756-OB16E, 1756-OB16EK

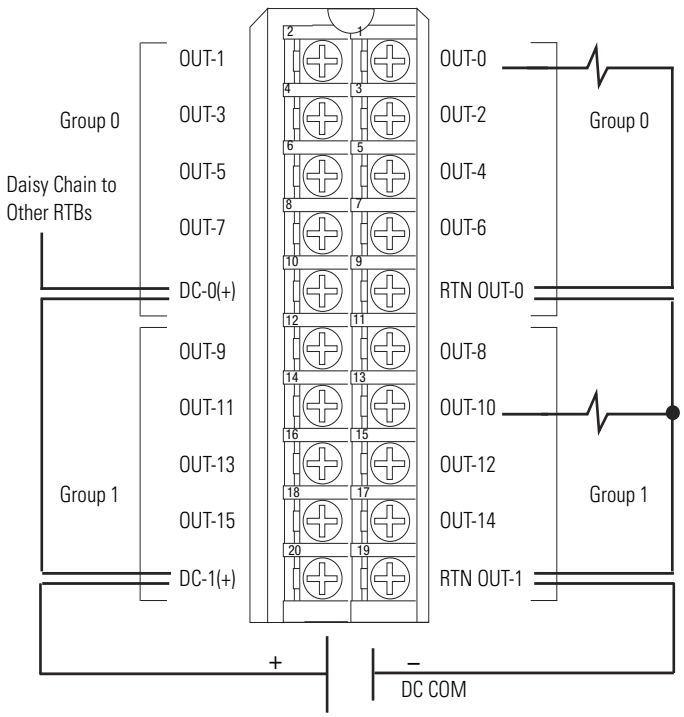

Surge Current Charts

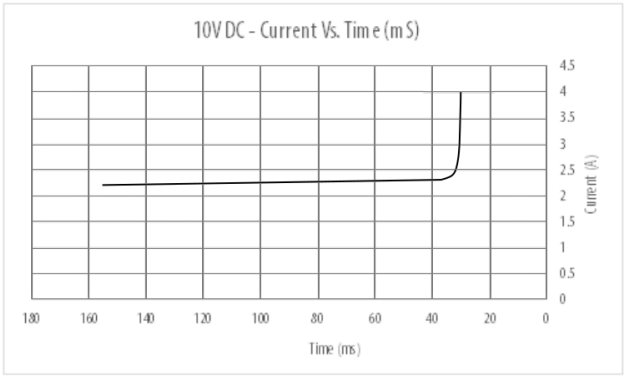

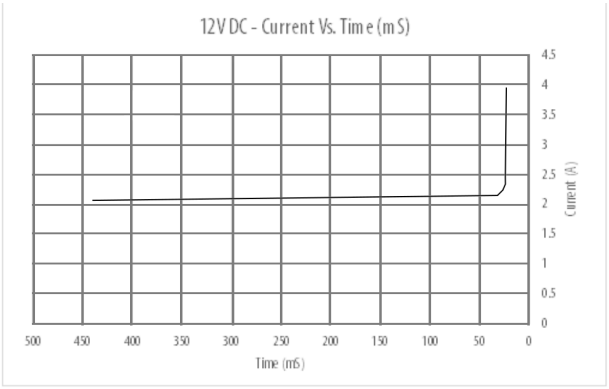

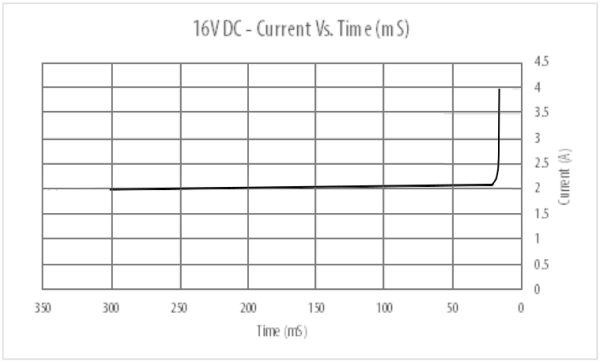

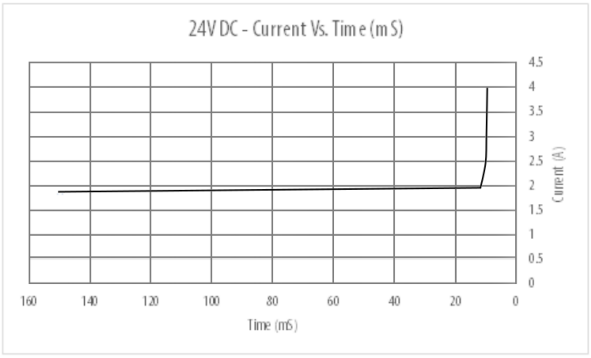

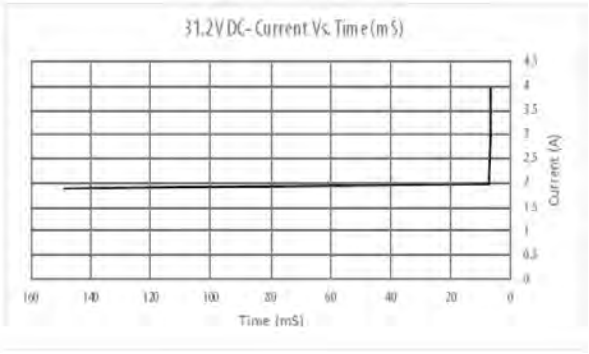

Technical Specifications - 1756-OB16E, 1756-OB16EK

Attribute	1756-OB16E, 1756-OB16EK
Outputs	16 electronically fused (8 points/group)
Voltage category	12/24V DC source
Operating voltage range	10…31.2V DC
Output delay time Off to On On to Off	 70 µs nom/1 ms max 360 µs nom/1 ms max
Current draw @ 5.1V	250 mA
Current draw @ 24V	2 mA
Total backplane power	1.32 W
Power dissipation, max	4.1 W @ 60 °C (140 °F)

Technical Specifications - 1756-OB16E, 1756-OB16EK

Attribute	1756-OB16E, 1756-OB16EK
Thermal dissipation	13.98 BTU/hr
Off-state leakage current per point, max	1 mA per point
On-state voltage drop, max	400 mV DC @ 1 A
Current per point, max	1 A @ 60 °C (140 °F)
Current per module, max	8 A @ 60 °C (140 °F)
Surge current per point, typical	2 A for 10 ms per point, repeatable every 2 s @ 0 °C (32 °F) @ 24V DC
Load current, min	3 mA per point
Scheduled outputs	Synchronization within 16.7 s max, reference to the Coordinated System Time
States in Fault mode per point	Hold last state, On or Off (Off is default)
States in Program mode per point	Hold last state, On or Off (Off is default)
Isolation voltage	250V (continuous), basic insulation type, outputs-to-backplane, and output group-to-group No isolation between individual group outputs
Module keying	Electronic, software configurable
Fusing	Electronically fused per group
Removable terminal block	1756-TBNH 1756-TBSH
RTB keying	User-defined mechanical
Slot width	1
Wire category	1(1)
Enclosure type	None (open-style)
North American temperature code	T4
IEC temperature code	T4

(1) Use this conductor category information for planning conductor routing as described in the system-level installation manual. See the Industrial Automation Wiring and Grounding Guidelines, publication 1770-4.1.

Environmental Specifications - 1756-OB16E, 1756-OB16EK

Attribute	1756-OB16E, 1756-OB16EK
Temperature, operating IEC 60068-2-1 (Test Ad, Operating Cold), IEC 60068-2-2 (Test Bd, Operating Dry Heat), IEC 60068-2-14 (Test Nb, Operating Thermal Shock)	0…60 °C (32…140 °F)
Temperature, surrounding air, max	60 °C (140 °F)
Temperature, nonoperating IEC 60068-2-1 (Test Ab, Unpackaged Nonoperating Cold), IEC 60068-2-2 (Test Bb, Unpackaged Nonoperating Dry Heat), IEC 60068-2-14 (Test Na, Unpackaged Nonoperating Thermal Shock)	-40…+85 °C (-40…+185 °F)
Relative humidity IEC 60068-2-30 (Test dB, Unpackaged Damp Heat)	5…95% noncondensing
Vibration IEC 60068-2-6 (Test Fc, Operating)	2 g @ 10…500 Hz
Shock, operating IEC 60068-2-27 (Test Ea, Unpackaged Shock)	30 g
Shock, nonoperating IEC 60068-2-27 (Test Ea, Unpackaged Shock)	50 g
Emissions	IEC 61000-6-4

Environmental Specifications - 1756-OB16E, 1756-OB16EK

Attribute	1756-OB16E, 1756-OB16EK
ESD immunity IEC 61000-4-2	6 kV contact discharges 8 kV air discharges
Radiated RF immunity IEC 61000-4-3	10V/m with 1 kHz sine-wave 80% AM from 80…2000 MHz 10V/m with 200 Hz 50% Pulse 100% AM @ 900 MHz 10V/m with 200 Hz 50% Pulse 100% AM @ 1890 MHz 3V/m with 1 kHz sine-wave 80% AM from 2000…2700 MHz
EFT/B immunity IEC 61000-4-4	±4 kV at 5 kHz on signal ports
Surge transient immunity IEC 61000-4-5	±1 kV line-line (DM) and ±2 kV line-earth (CM) on signal ports
Conducted RF immunity IEC 61000-4-6	10V rms with 1 kHz sine-wave 80% AM from 150 kHz…80 MHz
Oscillatory surge withstand IEEE C37.90.1	3 kV

Certifications - 1756-OB16E, 1756-OB16EK

Certification (when product is marked)(1)	1756-OB16E, 1756-OB16EK
UL	UL Listed Industrial Control Equipment. See UL File E65584.
CSA	CSA Certified Process Control Equipment. See CSA File LR54689C. CSA Certified Process Control Equipment for Class I, Division 2 Group A,B,C,D Hazardous Locations. See CSA File LR69960C.
CE	European Union 2014/30/EU EMC Directive, compliant with: • EN 61326-1; Meas./Control/Lab., Industrial Requirements • EN 61000-6-2; Industrial Immunity • EN 61000-6-4; Industrial Emissions • EN 61131-2; Programmable Controllers (Clause 8, Zone A & B) European Union 2014/35/EU LVD, compliant with: EN 61131-2; Programmable Controllers (Clause 11)
RCM	Australian Radiocommunications Act, compliant with: EN 61000-6-4; Industrial Emissions
Ex	European Union 2014/34/EU ATEX Directive, compliant with: • EN 60079-15; Potentially Explosive Atmospheres, Protection "n" • EN 60079-0; General Requirements II 3 G Ex nA IIC T4 X Gc
FM	FM Approved Equipment for use in Class I Division 2 Group A,B,C,D Hazardous Locations
KC	Korean Registration of Broadcasting and Communications Equipment, compliant with: Article 58-2 of Radio Waves Act, Clause 3
EAC	Russian Customs Union TR CU 020/2011 EMC Technical Regulation Russian Customs Union TR CU 004/2011 LV Technical Regulation

(1) See the Product Certification link at rok.auto/certifications for Declarations of Conformity, Certificates, and other certification details.

1756-0B16I

ControlLogix 24V DC isolated output module

Simplified Schematic

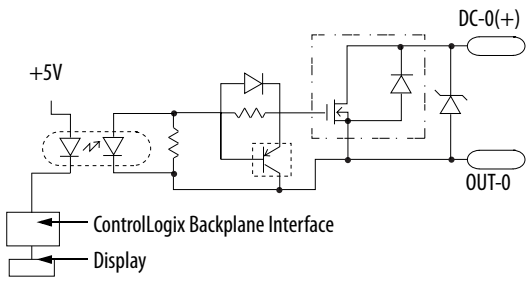

Surge Current Chart

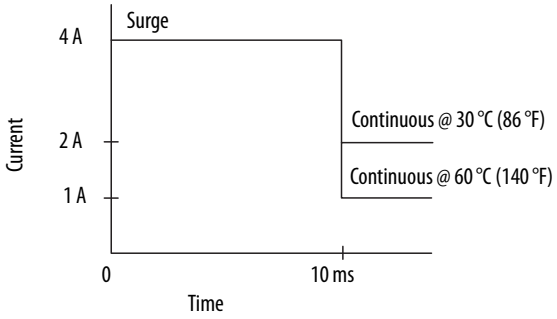

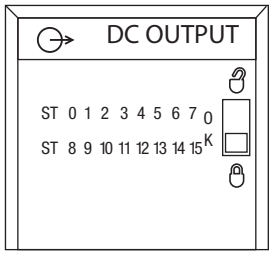

1756-0B16I

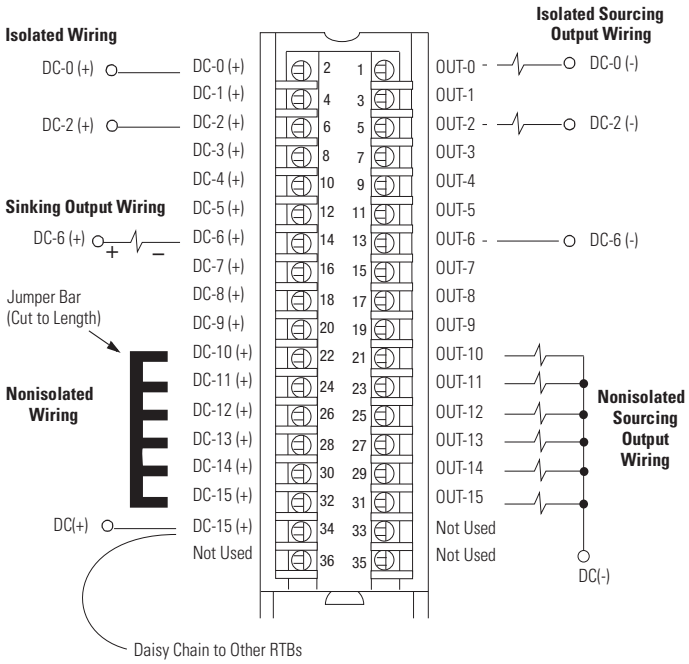

Additional jumper bars are available as catalog number 1756-JMPR.

Technical Specifications - 1756-0B16I

Attribute	1756-0B16I
Outputs	16 individually isolated
Pilot duty	2 A (DC-13SQ)
Voltage category	12/24V DC sink/source
Operating voltage range[1]	10…30V DC
Output delay time Off to On On to Off	 1 ms max 2 ms max
Current draw @ 5.1V	350 mA
Current draw @ 24V	2.5 mA
Total backplane power	1.8 W
Power dissipation, max	3.6 W @ 60 °C (140 °F)

Technical Specifications - 1756-OB16I (continued)

Attribute	1756-OB16I
Thermal dissipation	12.28 BTU/hr
Off-state leakage current per point, max	0.5 mA per point
On-state voltage drop, max	1.2V DC @ 2 A
Current per point, max	2 A @ 30 °C (86 °F) 1 A @ 60 °C (140 °F) (linear derating)
Current per module, max	8 A @ 30 °C (86 °F) 4 A @ 60 °C (140 °F) (linear derating)
Surge current per point	4 A for 10 ms per point, repeatable every 2 s
Load current, min	1 mA per point
Scheduled outputs	Synchronization within 16.7 s max, reference to the Coordinated System Time
States in Fault mode per point	Hold last state, On or Off (Off is default)
States in Program mode per point	Hold last state, On or Off (Off is default)
Isolation voltage	250V (continuous), basic insulation type, outputs-to-backplane 125V (continuous), basic insulation type, output-to-output
Module keying	Electronic, software configurable
Fusing	Not protected. A fused IFM is recommended to help protect outputs.
Removable terminal block	1756-TBCH 1756-TBS6H
RTB keying	User-defined mechanical
Slot width	1
Wire category	1(2)
Enclosure type	None (open-style)
North American temperature code	T4A
IEC temperature code	T4

(1) UL certification for 24V DC nominal. Rockwell Automation specified to 10…30V DC.

(2) Use this conductor category information for planning conductor routing as described in the system-level installation manual. See the Industrial Automation Wiring and Grounding Guidelines, publication 1770-4.1.

Environmental Specifications - 1756-OB16I

Attribute	1756-OB16I
Temperature, operating IEC 60068-2-1 (Test Ad, Operating Cold), IEC 60068-2-2 (Test Bd, Operating Dry Heat), IEC 60068-2-14 (Test Nb, Operating Thermal Shock)	0…60 °C (32…140 °F)
Temperature, surrounding air, max	60 °C (140 °F)
Temperature, nonoperating IEC 60068-2-1 (Test Ab, Unpackaged Nonoperating Cold), IEC 60068-2-2 (Test Bb, Unpackaged Nonoperating Dry Heat), IEC 60068-2-14 (Test Na, Unpackaged Nonoperating Thermal Shock)	-40…+85 °C (-40…+185 °F)
Relative humidity IEC 60068-2-30 (Test dB, Unpackaged Damp Heat)	5…95% noncondensing
Vibration IEC 60068-2-6 (Test Fc, Operating)	2 g @ 10…500 Hz
Shock, operating IEC 60068-2-27 (Test Ea, Unpackaged Shock)	30 g

Environmental Specifications - 1756-OB16I (continued)

Attribute	1756-OB16I
Shock, nonoperating IEC 60068-2-27 (Test Ea, Unpackaged Shock)	50 g
Emissions	IEC 61000-6-4
ESD immunity IEC 61000-4-2	6 kV contact discharges 8 kV air discharges
Radiated RF immunity IEC 61000-4-3	10V/m with 1 kHz sine-wave 80% AM from 80…2000 MHz 10V/m with 200 Hz 50% Pulse 100% AM @ 900 MHz 10V/m with 200 Hz 50% Pulse 100% AM @ 1890 MHz 3V/m with 1 kHz sine-wave 80% AM from 2000…2700 MHz
EFT/B immunity IEC 61000-4-4	±4 kV at 5 kHz on signal ports
Surge transient immunity IEC 61000-4-5	±1 kV line-line (DM) and ±2 kV line-earth (CM) on signal ports
Conducted RF immunity IEC 61000-4-6	10V rms with 1 kHz sine-wave 80% AM from 150 kHz…80 MHz

Certifications - 1756-OB16I

Certification (when product is marked)[1]	1756-OB16I
UL	UL Listed Industrial Control Equipment. See UL File E65584.
CSA	CSA Certified Process Control Equipment. See CSA File LR54689C. CSA Certified Process Control Equipment for Class I, Division 2 Group A,B,C,D Hazardous Locations. See CSA File LR69960C.
CE	European Union 2014/30/EU EMC Directive, compliant with: • EN 61326-1; Meas./Control/Lab., Industrial Requirements • EN 61000-6-2; Industrial Immunity • EN 61000-6-4; Industrial Emissions • EN 61131-2; Programmable Controllers (Clause 8, Zone A & B) European Union 2014/35/EU LVD, compliant with: EN 61131-2; Programmable Controllers (Clause 11)
RCM	Australian Radiocommunications Act, compliant with: EN 61000-6-4; Industrial Emissions
Ex	European Union 2014/34/EU ATEX Directive, compliant with: • EN 60079-15; Potentially Explosive Atmospheres, Protection "n" • EN 60079-0; General Requirements II 3 G Ex nA IIC T4 X Gc
FM	FM Approved Equipment for use in Class I Division 2 Group A,B,C,D Hazardous Locations
KC	Korean Registration of Broadcasting and Communications Equipment, compliant with: Article 58-2 of Radio Waves Act, Clause 3
EAC	Russian Customs Union TR CU 020/2011 EMC Technical Regulation Russian Customs Union TR CU 004/2011 LV Technical Regulation

(1) See the Product Certification link at rok.auto/certifications for Declarations of Conformity, Certificates, and other certification details.

1756-OB16IEF, 1756-OB16IEFK

ControlLogix DC (10...30V) electronically protected, sinking, or sourcing, isolated, fast output module

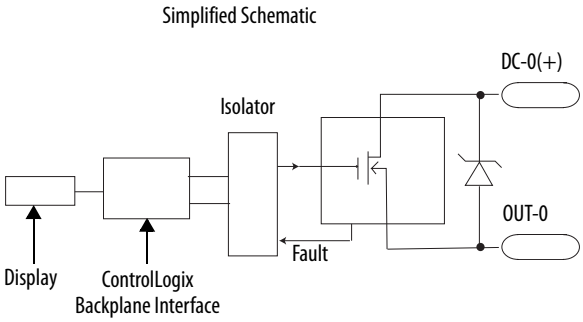

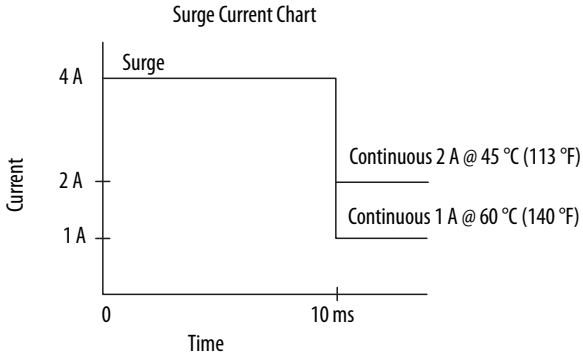

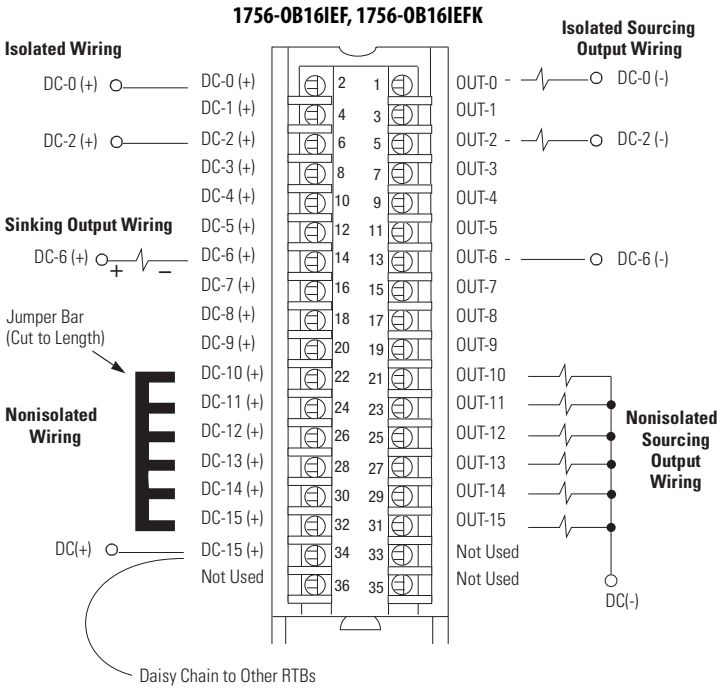

Additional jumper bars can be purchased by using catalog number 1756-JMPR.

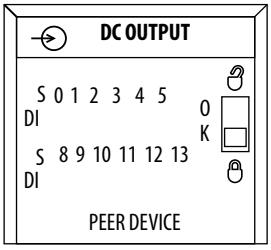

Technical Specifications - 1756-OB16IEF, 1756-OB16IEFK

Attribute	1756-OB16IEF, 1756-OB16IEFK
Outputs	16 individually isolated
Pilot duty	4 A inrush
Voltage category	12/24V DC sink/source
Operating voltage range	10…30V DC
Output delay time (backplane to screw) Off to On On to Off	 14 µs nom/23 µs max 14 µs nom/23 µs max
PWM cycle time	1 ms min/1 hour max
PWM On time	200 µs min/1 hour max
PWM On time accuracy	± 20 µs

Technical Specifications - 1756-OB16IEF, 1756-OB16IEFK

Attribute	1756-OB16IEF, 1756-OB16IEFK
Current draw @ 5.1V	320 mA
Current draw @ 24V	3 mA
Total backplane power	1.7 W
Power dissipation	4.9 W max (16 channels @ 1 A or 4 channels @ 2 A)
Thermal dissipation	16.71 BTU/hr
Off-state leakage current per point, max	< 0.1 mA per point
On-state voltage drop, max	0.2V DC @ 1 A 0.4V DC @ 2 A
Current per point, max	2 A @ 45 °C (113 °F) 4 channels max 1 A @ 60 °C (140 °F)
Current per module, max	16 A @ 60 °C (140 °F) 1 A max per channel 8 A @ 45 °C (113 °F) 2 A max per channel
Surge current per point	4 A for 10 ms per point, repeatable every 2 s
Load current, min	1 mA per point
Scheduled outputs	CIP Sync™ only
States in Fault mode per point	Hold last state, On or Off (Off is default)
Duration of Fault mode per point	1, 2, 5, 10 s, Forever (Forever is default)
Final state after Fault mode duration per point	On or Off (default is Off)
States in Program mode per point	Hold last state, On or Off (default is Off)
Isolation voltage	250V (continuous), reinforced insulation type, outputs-to-backplane 250V (continuous), basic insulation type, output-to-output
Module keying	Electronic, software configurable
Fusing	Electronically fused per point
Reverse polarity protection	No
Removable terminal block	1756-TBCH 1756-TBS6H
RTB keying	User-defined mechanical
Slot width	1
Wire category	1 on signal ports(1)
Enclosure type	None (open-style)
North American temperature code	T4
IEC temperature code	T4

(1) Use this conductor category information for planning conductor routing as described in the system-level installation manual. See the Industrial Automation Wiring and Grounding Guidelines, publication 1770-4.1.

Environmental Specifications - 1756-OB16IEF, 1756-OB16IEFK

Attribute	1756-OB16IEF, 1756-OB16IEFK
Temperature, operating IEC 60068-2-1 (Test Ad, Operating Cold), IEC 60068-2-2 (Test Bd, Operating Dry Heat), IEC 60068-2-14 (Test Nb, Operating Thermal Shock)	0…60 °C (32…140 °F)
Temperature, surrounding air, max	60 °C (140 °F)
Temperature, nonoperating IEC 60068-2-1 (Test Ab, Unpackaged Nonoperating Cold), IEC 60068-2-2 (Test Bb, Unpackaged Nonoperating Dry Heat), IEC 60068-2-14 (Test Na, Unpackaged Nonoperating Thermal Shock)	-40…+85 °C (-40…+185 °F)
Relative humidity IEC 60068-2-30 (Test dB, Unpackaged Damp Heat)	5…95% noncondensing
Vibration IEC 60068-2-6 (Test Fc, Operating)	2 g @ 10…500 Hz
Shock, operating IEC 60068-2-27 (Test Ea, Unpackaged Shock)	30 g
Shock, nonoperating IEC 60068-2-27 (Test Ea, Unpackaged Shock)	50 g
Emissions	IEC 61000-6-4
ESD immunity IEC 61000-4-2	6 kV contact discharges 8 kV air discharges
Radiated RF immunity IEC 61000-4-3	10V/m with 1 kHz sine-wave 80% AM from 80…2000 MHz 10V/m with 200 Hz 50% Pulse 100% AM @ 900 MHz 10V/m with 200 Hz 50% Pulse 100% AM @ 1890 MHz 3V/m with 1 kHz sine-wave 80% AM from 2000…2700 MHz
EFT/B immunity IEC 61000-4-4	±4 kV at 5 kHz on signal ports
Surge transient immunity IEC 61000-4-5	±1 kV line-line (DM) and ±2 kV line-earth (CM) on signal ports
Conducted RF immunity IEC 61000-4-6	10V rms with 1 kHz sine-wave 80% AM from 150 kHz…80 MHz

Certifications - 1756-OB16IEF, 1756-OB16IEFK

Certification (when product is marked)[1]	1756-OB16IEF, 1756-OB16IEFK
c-UL-us	UL Listed Industrial Control Equipment, certified for US and Canada. See UL File E65584. UL Listed for Class I, Division 2 Group A,B,C,D Hazardous Locations, certified for U.S. and Canada. See UL File E194810.
CE	European Union 2014/30/EU EMC Directive, compliant with: • EN 61326-1; Meas./Control/Lab., Industrial Requirements • EN 61000-6-2; Industrial Immunity • EN 61000-6-4; Industrial Emissions • EN 61131-2; Programmable Controllers (Clause 8, Zone A & B) European Union 2014/35/EU LVD, compliant with: EN 61131-2; Programmable Controllers (Clause 11)
RCM	Australian Radiocommunications Act, compliant with: EN 61000-6-4; Industrial Emissions
Ex	European Union 2014/34/EU ATEX Directive, compliant with: • EN 60079-15; Potentially Explosive Atmospheres, Protection "n" • EN 60079-0; General Requirements II 3 G Ex nA IIC T4 X Gc
KC	Korean Registration of Broadcasting and Communications Equipment, compliant with: Article 58-2 of Radio Waves Act, Clause 3
EAC	Russian Customs Union TR CU 020/2011 EMC Technical Regulation Russian Customs Union TR CU 004/2011 LV Technical Regulation

(1) See the Product Certification link at rok.auto/certifications for Declarations of Conformity, Certificates, and other certification details.

1756-0B16IEFS

ControlLogix DC (10...30V) scheduled, electronically protected, sinking, or sourcing, isolated, fast output module

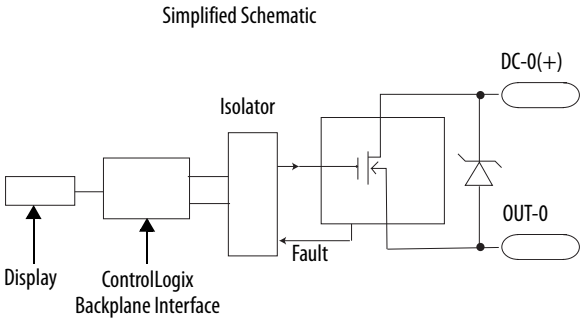

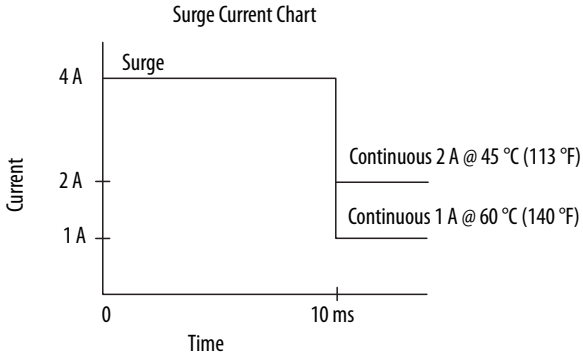

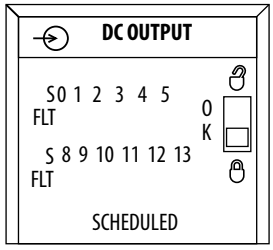

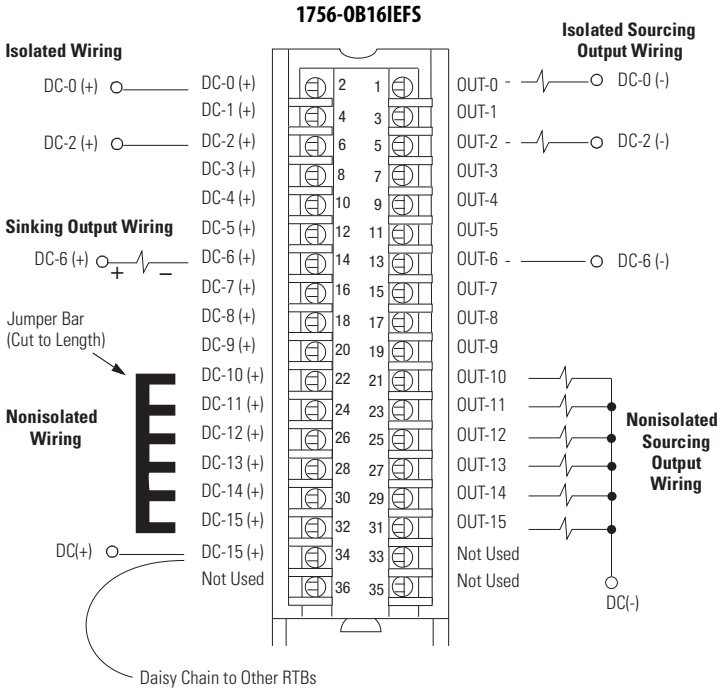

Additional jumper bars can be purchased by using catalog number 1756-JMPR.

Technical Specifications - 1756-0B16IEFS

Attribute	1756-0B16IEFS
Outputs	16 scheduled, individually isolated
Pilot duty	4 A inrush
Voltage category	12/24V DC sink/source
Operating voltage range	10…30V DC
Unscheduled output delay time (backplane to screw) Off to On On to Off	 14 µs nom/23 µs max 14 µs nom/23 µs max
Schedule accuracy	± 10 µs nom when all components are synchronized to the current CIP Sync Grandmaster
PWM cycle time	1 ms min/1 hour max
PWM On time	200 µs min/1 hour max

Technical Specifications - 1756-OB16IEFS (continued)

Attribute	1756-OB16IEFS
PWM On-time accuracy	± 20 µs
Current draw @ 5.1V	320 mA
Current draw @ 24V	3 mA
Total backplane power	1.7 W
Power dissipation	4.9 W max (16 channels @ 1 A or 4 channels @ 2 A)
Thermal dissipation	16.71 BTU/hr
Off-state leakage current per point, max	< 0.1 mA per point
On-state voltage drop, max	0.2V DC @ 1 A 0.4V DC @ 2 A
Current per point, max	2 A @ 45 °C (113 °F) 4 channels max 1 A @ 60 °C (140 °F)
Current per module, max	16 A @ 60 °C (140 °F) 1 A max per channel 8 A @ 45 °C (113 °F) 2 A max per channel
Surge current per point	4 A for 10 ms per point, repeatable every 2 s
Load current, min	1 mA per point
Scheduled outputs	CIP Sync only
States in Fault mode per point	Hold last state, On or Off (Off is default)
Duration of Fault mode per point	1, 2, 5, 10 s, Forever (Forever is default)
Final state after Fault mode duration per point	On or Off (default is Off)
States in Program mode per point	Hold last state, On or Off (default is Off)
Isolation voltage	250V (continuous), reinforced insulation type, outputs-to-backplane 250V (continuous), basic insulation type, output-to-output
Module keying	Electronic, software configurable
Fusing	Electronically fused per point
Reverse polarity protection	No
Removable terminal block	1756-TBCH 1756-TBS6H
RTB keying	User-defined mechanical
Slot width	1
Wire category	1 on signal ports(1)
Enclosure type	None (open-style)
North American temperature code	T4
IEC temperature code	T4

(1) Use this conductor category information for planning conductor routing as described in the system-level installation manual. See the Industrial Automation Wiring and Grounding Guidelines, publication 1770-4.1.

Environmental Specifications - 1756-OB16IEFS

Attribute	1756-OB16IEFS
Temperature, operating IEC 60068-2-1 (Test Ad, Operating Cold), IEC 60068-2-2 (Test Bd, Operating Dry Heat), IEC 60068-2-14 (Test Nb, Operating Thermal Shock)	0…60 °C (32…140 °F)
Temperature, surrounding air, max	60 °C (140 °F)
Temperature, nonoperating IEC 60068-2-1 (Test Ab, Unpackaged Nonoperating Cold), IEC 60068-2-2 (Test Bb, Unpackaged Nonoperating Dry Heat), IEC 60068-2-14 (Test Na, Unpackaged Nonoperating Thermal Shock)	-40…+85 °C (-40…+185 °F)
Relative humidity IEC 60068-2-30 (Test dB, Unpackaged Damp Heat)	5…95% noncondensing
Vibration IEC 60068-2-6 (Test Fc, Operating)	2 g @ 10…500 Hz
Shock, operating IEC 60068-2-27 (Test Ea, Unpackaged Shock)	30 g
Shock, nonoperating IEC 60068-2-27 (Test Ea, Unpackaged Shock)	50 g
Emissions	IEC 61000-6-4
ESD immunity IEC 61000-4-2	6 kV contact discharges 8 kV air discharges
Radiated RF immunity IEC 61000-4-3	10V/m with 1 kHz sine-wave 80% AM from 80…2000 MHz 10V/m with 200 Hz 50% Pulse 100% AM @ 900 MHz 10V/m with 200 Hz 50% Pulse 100% AM @ 1890 MHz 3V/m with 1 kHz sine-wave 80% AM from 2000…2700 MHz
EFT/B immunity IEC 61000-4-4	±4 kV at 5 kHz on signal ports
Surge transient immunity IEC 61000-4-5	±1 kV line-line (DM) and ±2 kV line-earth (CM) on signal ports
Conducted RF immunity IEC 61000-4-6	10V rms with 1 kHz sine-wave 80% AM from 150 kHz…80 MHz

Certifications - 1756-OB16IEFS

Certification (when product is marked)[1]	1756-OB16IEFS
c-UL-us	UL Listed Industrial Control Equipment, certified for US and Canada. See UL File E65584. UL Listed for Class I, Division 2 Group A,B,C,D Hazardous Locations, certified for U.S. and Canada. See UL File E194810.
CE	European Union 2014/30/EU EMC Directive, compliant with: • EN 61326-1; Meas./Control/Lab., Industrial Requirements • EN 61000-6-2; Industrial Immunity • EN 61000-6-4; Industrial Emissions • EN 61131-2; Programmable Controllers (Clause 8, Zone A & B) European Union 2014/35/EU LVD, compliant with: EN 61131-2; Programmable Controllers (Clause 11)
RCM	Australian Radiocommunications Act, compliant with: EN 61000-6-4; Industrial Emissions
Ex	European Union 2014/34/EU ATEX Directive, compliant with: • EN 60079-15; Potentially Explosive Atmospheres, Protection "n" • EN 60079-0; General Requirements II 3 G Ex nA IIC T4 X Gc
KC	Korean Registration of Broadcasting and Communications Equipment, compliant with: Article 58-2 of Radio Waves Act, Clause 3
EAC	Russian Customs Union TR CU 020/2011 EMC Technical Regulation Russian Customs Union TR CU 004/2011 LV Technical Regulation

(1) See the Product Certification link at rok.auto/certifications for Declarations of Conformity, Certificates, and other certification details.

1756-OB16IS

ControlLogix 24V DC scheduled, isolated output module

Simplified Schematic

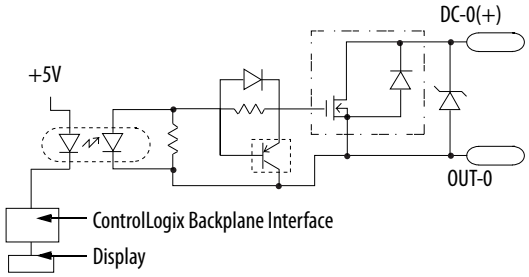

Surge Current Chart

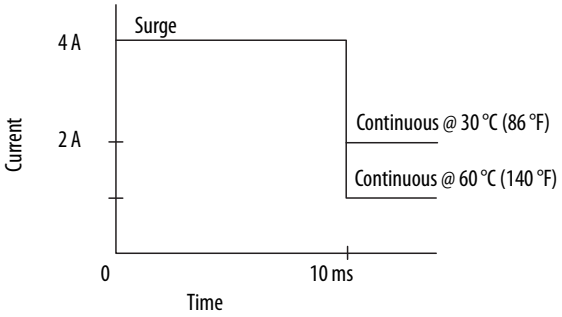

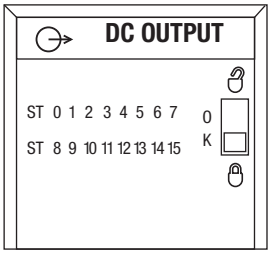

1756-OB16IS

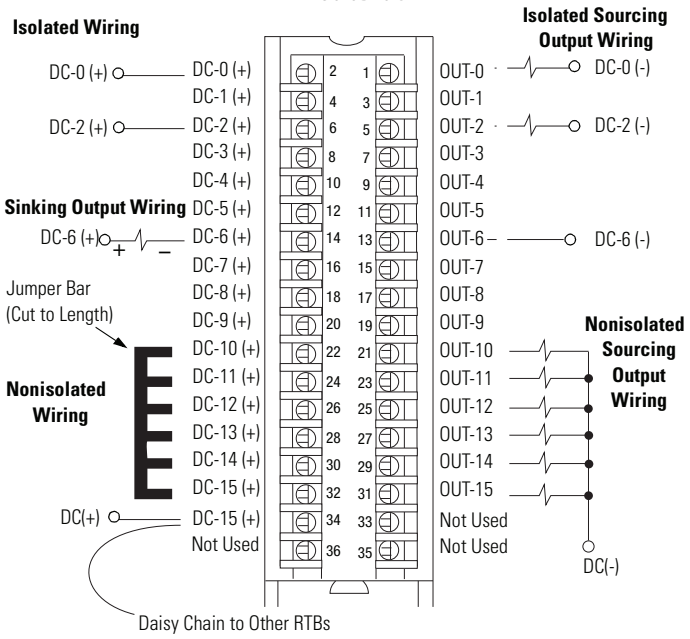

Additional jumper bars are available as catalog number 1756-JMPR.

Technical Specifications - 1756-OB16IS

Attribute	1756-OB16IS
Outputs	16 individually isolated, 8 scheduled
Pilot duty	2 A (DC-13SQ)
Voltage category	12/24V DC sink/source
Operating voltage range[1]	10…30V DC
Output delay time Off to On On to Off	 1 ms max 2 ms max
Current draw @ 5.1V	350 mA
Current draw @ 24V	2.5 mA
Total backplane power	1.8 W
Power dissipation, max	3.6 W @ 60 °C (140 °F)

Technical Specifications - 1756-OB16IS (continued)

Attribute	1756-OB16IS
Thermal dissipation	12.28 BTU/hr
Off-state leakage current per point, max	0.5 mA per point
On-state voltage drop, max	1.2V DC @ 2 A
Current per point, max	2 A @ 30 °C (86 °F) 1 A @ 60 °C (140 °F) (linear derating)
Current per module, max	8 A @ 30 °C (86 °F) 4 A @ 60 °C (140 °F) (linear derating)
Surge current per point	4 A for 10 ms per point, repeatable every 2 s
Load current, min	1 mA per point
Scheduled outputs	Synchronization within 16.7 s max, reference to the Coordinated System Time
States in Fault mode per point	Hold last state, On or Off (Off is default)
States in Program mode per point	Hold last state, On or Off (Off is default)
Isolation voltage	250V (continuous), basic insulation type, outputs-to-backplane, and output-to-output
Module keying	Electronic, software configurable
Fusing	Not protected. A fused IFM can be used to help protect outputs. See publication 1492-TD008. However, the ControlLogix system has been agency certified using only the ControlLogix RTBs, that is, 1756-TBCH, 1756-TBNH, 1756-TBSH, and 1756-TBS6H. Any application that requires agency certification of the ControlLogix system that uses other wiring termination methods can require application-specific approval by the certifying agency.
Removable terminal block	1756-TBCH 1756-TBS6H
RTB keying	User-defined mechanical
Slot width	1
Wire category	1(2)
Wire type	Copper
Enclosure type	None (open-style)
North American temperature code	T4A
IEC temperature code	T4

(1) UL certification for 24V DC nominal. Rockwell Automation specified to 10…30V DC

(2) Use this conductor category information for planning conductor routing as described in the system-level installation manual. See the Industrial Automation Wiring and Grounding Guidelines, publication 1770-4.1.

Environmental Specifications - 1756-OB16IS

Attribute	1756-OB16IS
Temperature, operating IEC 60068-2-1 (Test Ad, Operating Cold), IEC 60068-2-2 (Test Bd, Operating Dry Heat), IEC 60068-2-14 (Test Nb, Operating Thermal Shock)	0…60 °C (32…140 °F)
Temperature, surrounding air, max	60 °C (140 °F)
Temperature, nonoperating IEC 60068-2-1 (Test Ab, Unpackaged Nonoperating Cold), IEC 60068-2-2 (Test Bb, Unpackaged Nonoperating Dry Heat), IEC 60068-2-14 (Test Na, Unpackaged Nonoperating Thermal Shock)	-40…+85 °C (-40…+185 °F)
Relative humidity IEC 60068-2-30 (Test dB, Unpackaged Damp Heat)	5…95% noncondensing
Vibration IEC 60068-2-6 (Test Fc, Operating)	2 g @ 10…500 Hz

Environmental Specifications - 1756-OB16IS (continued)

Attribute	1756-OB16IS
Shock, operating IEC 60068-2-27 (Test Ea, Unpackaged Shock)	30 g
Shock, nonoperating IEC 60068-2-27 (Test Ea, Unpackaged Shock)	50 g
Emissions	IEC 61000-6-4
ESD immunity IEC 61000-4-2	6 kV contact discharges 8 kV air discharges
Radiated RF immunity IEC 61000-4-3	10V/m with 1 kHz sine-wave 80% AM from 80…2000 MHz 10V/m with 200 Hz 50% Pulse 100% AM @ 900 MHz 10V/m with 200 Hz 50% Pulse 100% AM @ 1890 MHz 3V/m with 1 kHz sine-wave 80% AM from 2000…2700 MHz
EFT/B immunity IEC 61000-4-4	±4 kV at 5 kHz on signal ports
Surge transient immunity IEC 61000-4-5	±1 kV line-line (DM) and ±2 kV line-earth (CM) on signal ports
Conducted RF immunity IEC 61000-4-6	10V rms with 1 kHz sine-wave 80% AM from 150 kHz…80 MHz

Certifications - 1756-OB16IS

Certification (when product is marked)[1]	1756-OB16IS
UL	UL Listed Industrial Control Equipment. See UL File E65584.
CSA	CSA Certified Process Control Equipment. See CSA File LR54689C. CSA Certified Process Control Equipment for Class I, Division 2 Group A,B,C,D Hazardous Locations. See CSA File LR69960C.
CE	European Union 2014/30/EU EMC Directive, compliant with: • EN 61326-1; Meas./Control/Lab., Industrial Requirements • EN 61000-6-2; Industrial Immunity • EN 61000-6-4; Industrial Emissions • EN 61131-2; Programmable Controllers (Clause 8, Zone A & B) European Union 2014/35/EU LVD, compliant with: EN 61131-2; Programmable Controllers (Clause 11)
RCM	Australian Radiocommunications Act, compliant with: EN 61000-6-4; Industrial Emissions
Ex	European Union 2014/34/EU ATEX Directive, compliant with: • EN 60079-15; Potentially Explosive Atmospheres, Protection "n" • EN 60079-0; General Requirements II 3 G Ex nA IIC T4 X Gc
KC	Korean Registration of Broadcasting and Communications Equipment, compliant with: Article 58-2 of Radio Waves Act, Clause 3
EAC	Russian Customs Union TR CU 020/2011 EMC Technical Regulation Russian Customs Union TR CU 004/2011 LV Technical Regulation

(1) See the Product Certification link at rok.auto/certifications for Declarations of Conformity, Certificates, and other certification details.

1756-OB32, 1756-OB32K

ControlLogix DC (10...31.2V) output module

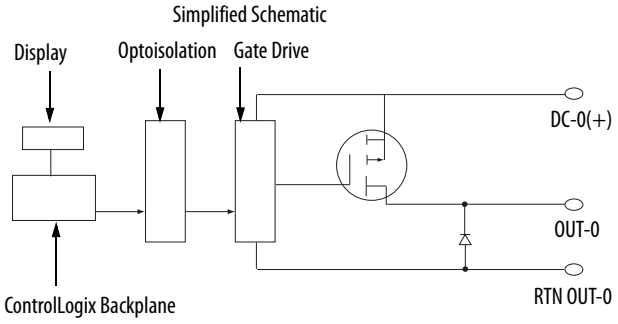

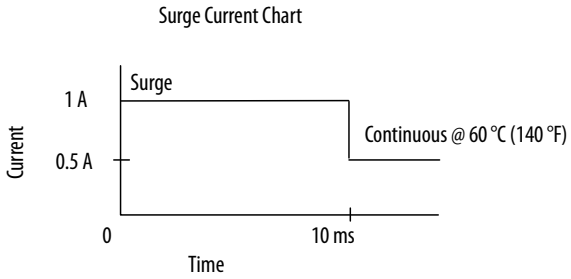

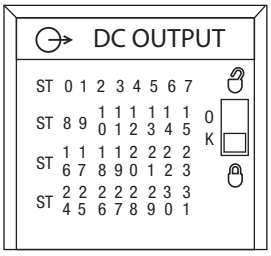

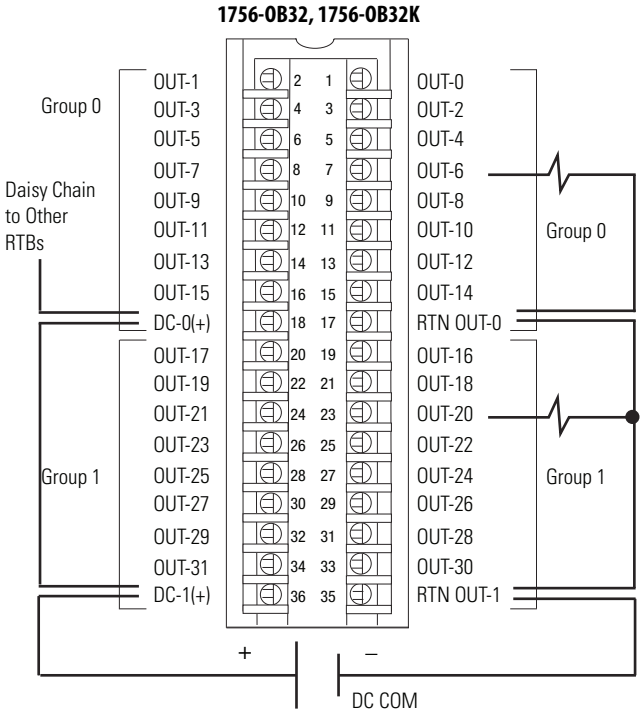

Technical Specifications - 1756-OB32, 1756-OB32K

Attribute	1756-OB32, 1756-OB32K
Outputs	32 (16 points/group)
Voltage category	12/24V DC source
Operating voltage range	10…31.2V DC
Output delay time Off to On On to Off	 60 µs nom/1 ms max 200 µs nom/1 ms max
Current draw @ 5.1V	300 mA
Current draw @ 24V	2 mA
Total backplane power	1.58 W
Power dissipation, max	4.8 W @ 60 °C (140 °F)
Thermal dissipation	16.37 BTU/hr
Off-state leakage current per point, max	0.5 mA per point
On-state voltage drop, max	200 mV DC @ 0.5 A

Technical Specifications - 1756-OB32, 1756-OB32K

Attribute	1756-OB32, 1756-OB32K
Current per point, max	0.5 A @ 50 °C (122 °F) linear derating 0.35 A @ 60 °C (140 °F)
Current per module, max	16 A @ 50 °C (122 °F) linear derating 10 A @ 60 °C (140 °F)
Surge current per point, max	1 A for 10 ms per point, repeatable every 2 s @ 60 °C (140 °F)
Load current, min	3 mA per point
Scheduled outputs	Synchronization within 16.7 s max, reference to the Coordinated System Time
States in Fault mode per point	Hold last state, On or Off (Off is default)
States in Program mode per point	Hold last state, On or Off (Off is default)
Isolation voltage	250V (continuous), basic insulation type, outputs-to-backplane, and output group-to-group No isolation between individual group outputs
Module keying	Electronic, software configurable
Fusing	Not protected. A fused IFM can be used to help protect outputs. See publication 1492-TD008. However, the ControlLogix system has been agency certified using only the ControlLogix RTBs, that is, 1756-TBCH, 1756-TBNH, 1756-TBSH, and 1756-TBS6H. Any application that requires agency certification of the ControlLogix system that uses other wiring termination methods can require application-specific approval by the certifying agency.
Removable terminal block	1756-TBCH 1756-TBS6H
RTB keying	User-defined mechanical
Slot width	1
Wire category	1(1)
Enclosure type	None (open-style)
North American temperature code	T3C
IEC temperature code	T3

(1) Use this conductor category information for planning conductor routing as described in the system-level installation manual. See the Industrial Automation Wiring and Grounding Guidelines, publication 1770-4.1.

Environmental Specifications - 1756-OB32, 1756-OB32K

Attribute	1756-OB32, 1756-OB32K
Temperature, operating IEC 60068-2-1 (Test Ad, Operating Cold), IEC 60068-2-2 (Test Bd, Operating Dry Heat), IEC 60068-2-14 (Test Nb, Operating Thermal Shock)	0…60 °C (32…140 °F)
Temperature, surrounding air, max	60 °C (140 °F)
Temperature, nonoperating IEC 60068-2-1 (Test Ab, Unpackaged Nonoperating Cold), IEC 60068-2-2 (Test Bb, Unpackaged Nonoperating Dry Heat), IEC 60068-2-14 (Test Na, Unpackaged Nonoperating Thermal Shock)	-40…+85 °C (-40…+185 °F)
Relative humidity IEC 60068-2-30 (Test dB, Unpackaged Damp Heat)	5…95% noncondensing
Vibration IEC 60068-2-6 (Test Fc, Operating)	2 g @ 10…500 Hz
Shock, operating IEC 60068-2-27 (Test Ea, Unpackaged Shock)	30 g
Shock, nonoperating IEC 60068-2-27 (Test Ea, Unpackaged Shock)	50 g
Emissions	IEC 61000-6-4

Environmental Specifications - 1756-OB32, 1756-OB32K

Attribute	1756-OB32, 1756-OB32K
ESD immunity IEC 61000-4-2	6 kV contact discharges 8 kV air discharges
Radiated RF immunity IEC 61000-4-3	10V/m with 1 kHz sine-wave 80% AM from 80…2000 MHz 10V/m with 200 Hz 50% Pulse 100% AM @ 900 MHz 10V/m with 200 Hz 50% Pulse 100% AM @ 1890 MHz 3V/m with 1 kHz sine-wave 80% AM from 2000…2700 MHz
EFT/B immunity IEC 61000-4-4	±4 kV at 5 kHz on signal ports
Surge transient immunity IEC 61000-4-5	±1 kV line-line (DM) and ±2 kV line-earth (CM) on signal ports
Conducted RF immunity IEC 61000-4-6	10V rms with 1 kHz sine-wave 80% AM from 150 kHz…80 MHz

Certifications - 1756-OB32

Certification (when product is marked)(1)	1756-OB32, 1756-OB32K
UL	UL Listed Industrial Control Equipment. See UL File E65584.
CSA	CSA Certified Process Control Equipment. See CSA File LR54689C. CSA Certified Process Control Equipment for Class I, Division 2 Group A,B,C,D Hazardous Locations. See CSA File LR69960C.
CE	European Union 2014/30/EU EMC Directive, compliant with: • EN 61326-1; Meas./Control/Lab., Industrial Requirements • EN 61000-6-2; Industrial Immunity • EN 61000-6-4; Industrial Emissions • EN 61131-2; Programmable Controllers (Clause 8, Zone A & B) European Union 2014/35/EU LVD, compliant with: EN 61131-2; Programmable Controllers (Clause 11)
RCM	Australian Radiocommunications Act, compliant with: EN 61000-6-4; Industrial Emissions
Ex	European Union 2014/34/EU ATEX Directive, compliant with: • EN 60079-15; Potentially Explosive Atmospheres, Protection "n" • EN 60079-0; General Requirements II 3 G Ex nA IIC T3 X Gc
FM	FM Approved Equipment for use in Class I Division 2 Group A,B,C,D Hazardous Locations
KC	Korean Registration of Broadcasting and Communications Equipment, compliant with: Article 58-2 of Radio Waves Act, Clause 3
EAC	Russian Customs Union TR CU 020/2011 EMC Technical Regulation Russian Customs Union TR CU 004/2011 LV Technical Regulation

(1) See the Product Certification link at rok.auto/certifications for Declarations of Conformity, Certificates, and other certification details.

1756-0C8

ControlLogix DC (30...60V) output module

Simplified Schematic

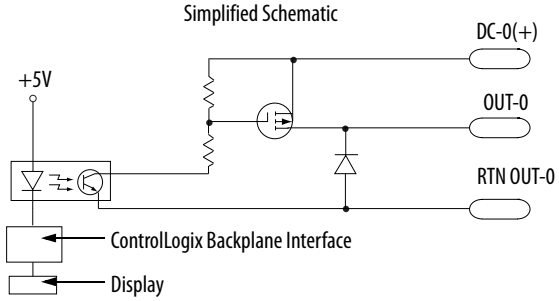

Surge Current Chart

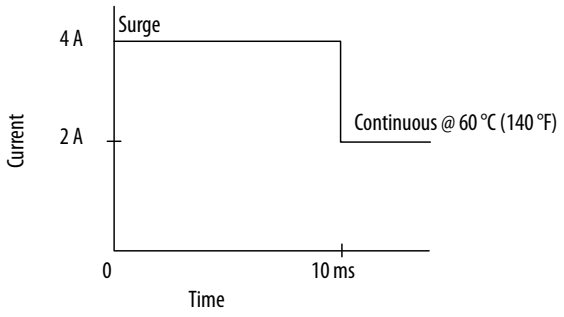

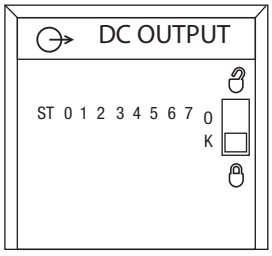

1756-0C8

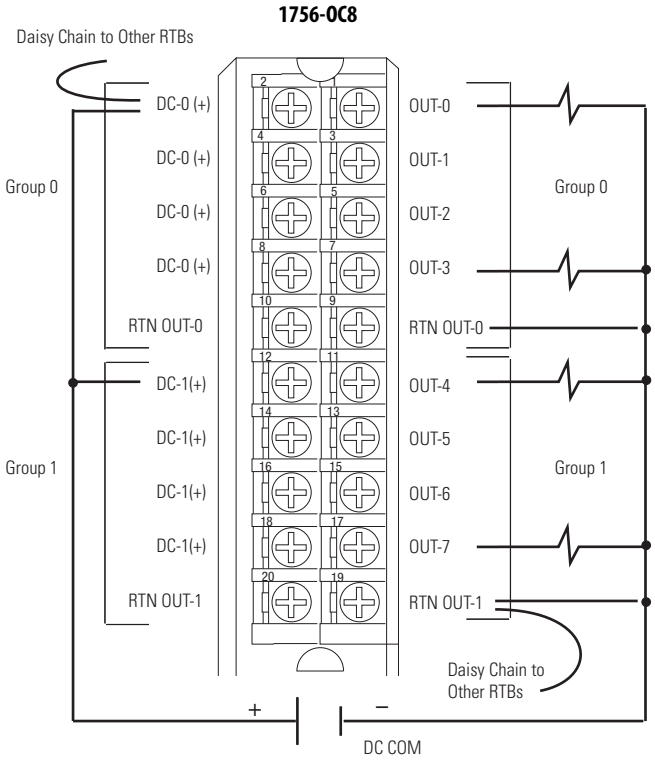

Technical Specifications - 1756-0C8

Attribute	1756-0C8
Outputs	8 (4 points/group)
Pilot duty	2 A
Voltage category	48V DC source
Operating voltage range	30…60V DC
Output delay time Off to On On to Off	 1 ms, max 2 ms, max
Current draw @ 5.1V	165 mA
Current draw @ 24V	2 mA
Total backplane power	0.89 W
Power dissipation, max	4.9 W @ 60 °C (140 °F)

Technical Specifications - 1756-OC8 (continued)

Attribute	1756-OC8
Thermal dissipation	16.71 BTU/hr
Off-state leakage current, max	1 mA per point
On-state voltage drop, max	2V DC @ 2 A
Current per point, max	2 A @ 60 °C (140 °F)
Current per module, max	8 A @ 60 °C (140 °F)
Surge current per point	4 A for 10 ms per point, repeatable every 1 s @ 60 °C (140 °F)
Load current, min	2 mA per point
Scheduled outputs	Synchronization within 16.7 s max, reference to the Coordinated System Time
States in Fault mode per point	Hold last state, On or Off (Off is default)
States in Program mode per point	Hold last state, On or Off (Off is default)
Isolation voltage	250V (continuous), basic insulation type, outputs-to-backplane, and output group-to-group No isolation between individual group outputs
Module keying	Electronic, software configurable
Fusing	Not protected. A fused IFM is recommended to help protect outputs
Removable terminal block	1756-TBNH 1756-TBSH
RTB keying	User-defined mechanical
Slot width	1
Wire category	1(1)
Enclosure type	None (open-style)
North American temperature code	T4
IEC temperature code	T4

(1) Use this conductor category information for planning conductor routing as described in the system-level installation manual. See the Industrial Automation Wiring and Grounding Guidelines, publication 1770-4.1.

Environmental Specifications - 1756-OC8

Attribute	1756-OC8
Temperature, operating IEC 60068-2-1 (Test Ad, Operating Cold), IEC 60068-2-2 (Test Bd, Operating Dry Heat), IEC 60068-2-14 (Test Nb, Operating Thermal Shock)	0…60 °C (32…140 °F)
Temperature, surrounding air, max	60 °C (140 °F)
Temperature, nonoperating IEC 60068-2-1 (Test Ab, Unpackaged Nonoperating Cold), IEC 60068-2-2 (Test Bb, Unpackaged Nonoperating Dry Heat), IEC 60068-2-14 (Test Na, Unpackaged Nonoperating Thermal Shock)	-40…+85 °C (-40…+185 °F)
Relative humidity IEC 60068-2-30 (Test dB, Unpackaged Damp Heat)	5…95% noncondensing
Vibration IEC 60068-2-6 (Test Fc, Operating)	2 g @ 10…500 Hz
Shock, operating IEC 60068-2-27 (Test Ea, Unpackaged Shock)	30 g
Shock, nonoperating IEC 60068-2-27 (Test Ea, Unpackaged Shock)	50 g
Emissions	IEC 61000-6-4

Environmental Specifications - 1756-OC8 (continued)

Attribute	1756-OC8
ESD immunity IEC 61000-4-2	6 kV contact discharges 8 kV air discharges
Radiated RF immunity IEC 61000-4-3	10V/m with 1 kHz sine-wave 80% AM from 80…2000 MHz 10V/m with 200 Hz 50% Pulse 100% AM @ 900 MHz 10V/m with 200 Hz 50% Pulse 100% AM @ 1890 MHz 3V/m with 1 kHz sine-wave 80% AM from 2000…2700 MHz
EFT/B immunity IEC 61000-4-4	±4 kV at 5 kHz on signal ports
Surge transient immunity IEC 61000-4-5	±1 kV line-line (DM) and ±2 kV line-earth (CM) on signal ports
Conducted RF immunity IEC 61000-4-6	10V rms with 1 kHz sine-wave 80% AM from 150 kHz…80 MHz

Certifications - 1756-OC8

Certification (when product is marked)(1)	1756-OC8
UL	UL Listed Industrial Control Equipment. See UL File E65584.
CSA	CSA Certified Process Control Equipment. See CSA File LR54689C. CSA Certified Process Control Equipment for Class I, Division 2 Group A,B,C,D Hazardous Locations. See CSA File LR69960C.
CE	European Union 2014/30/EU EMC Directive, compliant with: • EN 61326-1; Meas./Control/Lab., Industrial Requirements • EN 61000-6-2; Industrial Immunity • EN 61000-6-4; Industrial Emissions • EN 61131-2; Programmable Controllers (Clause 8, Zone A & B) European Union 2014/35/EU LVD, compliant with: EN 61131-2; Programmable Controllers (Clause 11)
RCM	Australian Radiocommunications Act, compliant with: EN 61000-6-4; Industrial Emissions
Ex	European Union 2014/34/EU ATEX Directive, compliant with: • EN 60079-15; Potentially Explosive Atmospheres, Protection "n" • EN 60079-0; General Requirements II 3 G Ex nA IIC T4 X Gc
FM	FM Approved Equipment for use in Class I Division 2 Group A,B,C,D Hazardous Locations
KC	Korean Registration of Broadcasting and Communications Equipment, compliant with: Article 58-2 of Radio Waves Act, Clause 3
EAC	Russian Customs Union TR CU 020/2011 EMC Technical Regulation Russian Customs Union TR CU 004/2011 LV Technical Regulation

(1) See the Product Certification link at rok.auto/certifications for Declarations of Conformity, Certificates, and other certification details.

1756-OF4, 1756-OF4K

ControlLogix voltage/current output analog module

1756-OF4, 1756-OF4K Current

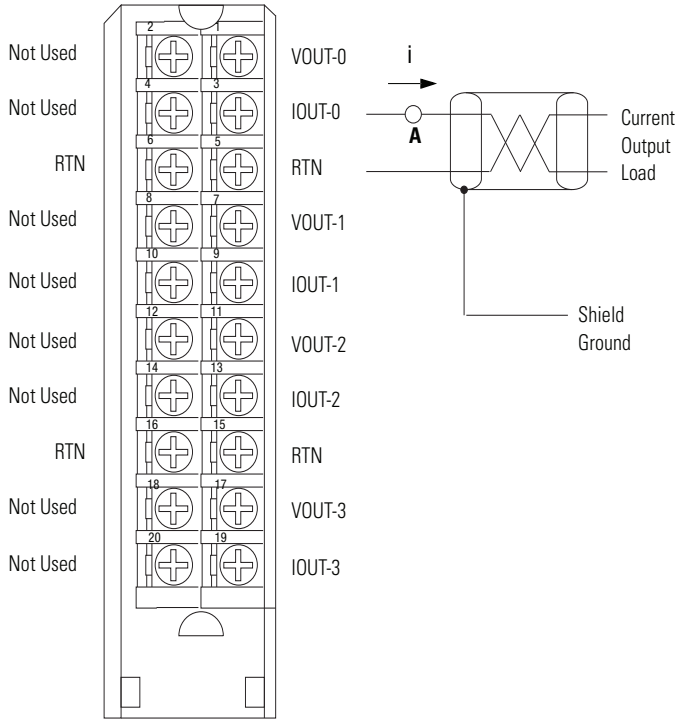

1756-OF4, 1756-OF4K Voltage

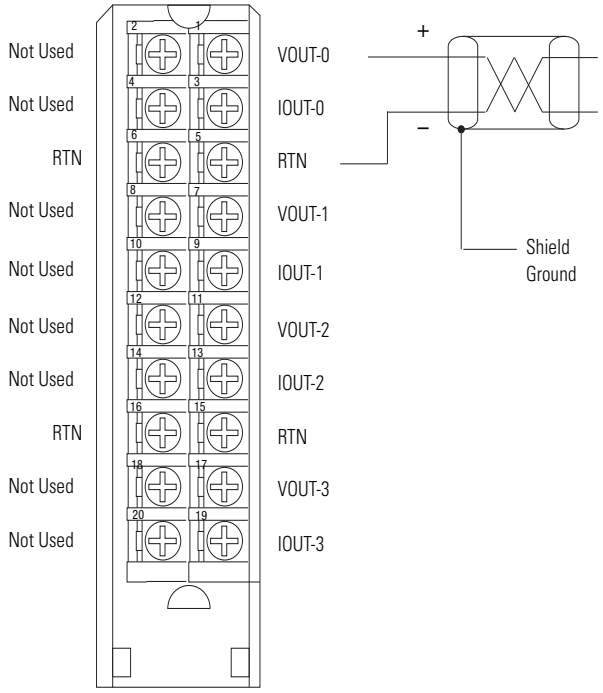

- Place additional loop devices (such as strip chart recorders) at the A location noted in the drawing.
- All terminals marked RTN are connected internally.

All terminals marked RTN are connected internally.

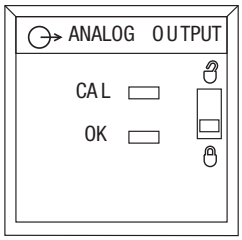

Signal and User Counts - 1756-OF4, 1756-OF4K

Range	Low Signal and User Counts	High Signal and User Counts
0…20 mA	0 mA -32768 counts	21.2916 mA 32767 counts
±10V	-10.4336V -32768 counts	10.4336V 32767 counts

Technical Specifications - 1756-OF4, 1756-OF4K

Attribute	1756-OF4, 1756-OF4K
Outputs	Four voltage or current outputs
Output range	±10V 4…20 mA
Resolution	Voltage: 15 bits across 10.5V, 320 μV/bit Current: 15 bits across 21 mA, 650 nA/bit
Voltage and current ratings	Backplane: 5.1V DC, 150 mA max 24V DC, 210 mA max Output voltage: -10…+10V Output current: 4…20 mA
Current draw @ 5.1V	150 mA
Current draw @ 24V	120 mA
Total backplane power	5.8 W
Power consumption	3.7 W backplane power
Power dissipation, max	3.7 W to 2.4 W; 0 ohm to 750 ohm load
Thermal dissipation	10.91 BTU/hr
Open circuit detection	Current output only (Output must be set to >0.1 mA)
Overvoltage protection	24V DC
Short circuit protection	Electronically current limited to 21 mA or less
Drive capability	Voltage: >2000 Ω Current: 0…750 Ω
Settling time	<2 ms to 95% of final value with resistive loads
Calibrated accuracy	Better than 0.05% of range from 4…21 mA, -10.4…10.4V
Calibration interval	12 months typical
Offset drift	50 μV/ °C 100 nA/°C
Gain drift with temperature	Voltage: 25 ppm/°C, 520 μV/°C Current: 50 ppm/°C, 1050 μA/°C
Module error	Voltage: 0.15% of range Current: 0.3% of range
Module scan time	12 ms floating point 8 ms integer
Data format	Integer mode (left justified, 2 s complement) IEEE 32-bit floating point
Module conversion method	R-Ladder DAC, monotonicity with no missing codes
Isolation voltage	250V (continuous), Reinforced insulation type, Output Channels to Backplane No isolation between individual Output Channels
Module keying	Electronic, software configurable
Removable terminal block	1756-TBNH 1756-TBSH
RTB keying	User-defined mechanical
Slot width	1

Technical Specifications - 1756-0F4, 1756-0F4K

Attribute	1756-0F4, 1756-0F4K
Wire size	1756-TBNH Single wire connection: 0.33…2.1 mm2(22…14 AWG) solid or stranded copper wire, rated at 105 °C (221 °F) or greater, 1.2 mm (3/64 in.) insulation max. Double wire connection: 0.33…1.3 mm2(22…16 AWG) solid or stranded copper wire, rated at 105 °C (221 °F) or greater, 1.2 mm (3/64 in.) insulation max. Do not wire more than two conductors on any terminal. 1756-TBSH Single wire connection: 0.33…2.1 mm2(22…14 AWG) solid or stranded shielded copper wire, rated at 105 °C (221 °F) or greater, 1.2 mm (3/64 in.) insulation max. Do not wire multiple conductors on any terminal.
Terminal block torque specs	1756-TBNH: 1.36 N•m (12 lb•in)
Wiring category(1)	1 - on signal ports
Enclosure type	None (open-style)
North American temp code	T4A
ATEX temp code	T4
IECEx temp code	T4

(1) Use this conductor category information for planning conductor routing. See the Industrial Automation Wiring and Grounding Guidelines, publication 1770-4.1.

Environmental Specifications - 1756-0F4, 1756-0F4K

Attribute	1756-0F4, 1756-0F4K
Temperature, operating IEC 60068-2-1 (Test Ad, Operating Cold), IEC 60068-2-2 (Test Bd, Operating Dry Heat), IEC 60068-2-14 (Test Nb, Operating Thermal Shock)	0 °C < Ta < 60 °C (+32 °F < Ta < +140 °F)
Temperature, surrounding air, max	60 °C (140 °F)
Temperature, nonoperating IEC 60068-2-1 (Test Ab, Unpackaged Nonoperating Cold), IEC 60068-2-2 (Test Bb, Unpackaged Nonoperating Dry Heat), IEC 60068-2-14 (Test Na, Unpackaged Nonoperating Thermal Shock)	-40…+85 °C (-40…+185 °F)
Relative humidity IEC 60068-2-30 (Test dB, Unpackaged Damp Heat)	5…95% noncondensing
Vibration IEC 60068-2-6 (Test Fc, Operating)	2 g @ 10…500 Hz
Shock, operating IEC 60068-2-27 (Test Ea, Unpackaged Shock)	30 g
Shock, nonoperating IEC 60068-2-27 (Test Ea, Unpackaged Shock)	50 g
Emissions	IEC 61000-6-4
ESD immunity IEC 61000-4-2	6 kV contact discharges 8 kV air discharges
Radiated RF immunity IEC 61000-4-3	10V/m with 1 kHz sine-wave 80% AM from 80…2000 MHz 10V/m with 200 Hz 50% Pulse 100% AM @ 900 MHz 10V/m with 200 Hz 50% Pulse 100% AM @ 1890 MHz 3V/m with 1 kHz sine-wave 80% AM from 2000…2700 MHz

Environmental Specifications - 1756-OF4, 1756-OF4K

Attribute	1756-OF4, 1756-OF4K
EFT/B immunity IEC 61000-4-4	±4 kV at 5 kHz on signal ports
Surge transient immunity IEC 61000-4-5	±1 kV line-line (DM) and ±2 kV line-earth (CM) on signal ports
Conducted RF immunity IEC 61000-4-6	10V rms with 1 kHz sine-wave 80% AM from 150 kHz…80 MHz

Certifications - 1756-OF4, 1756-OF4K

Certification (when product is marked)(1)	1756-OF4, 1756-OF4K
UL	UL Listed Industrial Control Equipment. See UL File E65584.
CSA	CSA Certified Process Control Equipment. See CSA File LR54689C. CSA Certified Process Control Equipment for Class I, Division 2 Group A,B,C,D Hazardous Locations. See CSA File LR69960C.
CE	European Union 2014/30/EU EMC Directive, compliant with: • EN 61326-1; Meas./Control/Lab., Industrial Requirements • EN 61000-6-2; Industrial Immunity • EN 61000-6-4; Industrial Emissions • EN 61131-2; Programmable Controllers (Clause 8, Zone A & B) European Union 2014/35/EU LVD, compliant with: EN 61131-2; Programmable Controllers (Clause 11)
RCM	Australian Radiocommunications Act, compliant with: EN 61000-6-4; Industrial Emissions
Ex	European Union 2014/34/EU ATEX Directive, compliant with: • EN 60079-15; Potentially Explosive Atmospheres, Protection "n" • EN 60079-0; General Requirements II 3 G Ex nA IIC T4 X Gc
FM	FM Approved Equipment for use in Class I Division 2 Group A,B,C,D Hazardous Locations
KC	Korean Registration of Broadcasting and Communications Equipment, compliant with: Article 58-2 of Radio Waves Act, Clause 3
EAC	Russian Customs Union TR CU 020/2011 EMC Technical Regulation Russian Customs Union TR CU 004/2011 LV Technical Regulation

(1) See the Product Certification link at rok.auto/certifications for Declarations of Conformity, Certificates, and other certification details.

1756-0F6CI

ControlLogix current loop output analog module

1756-0F6CI
0…550 Ω

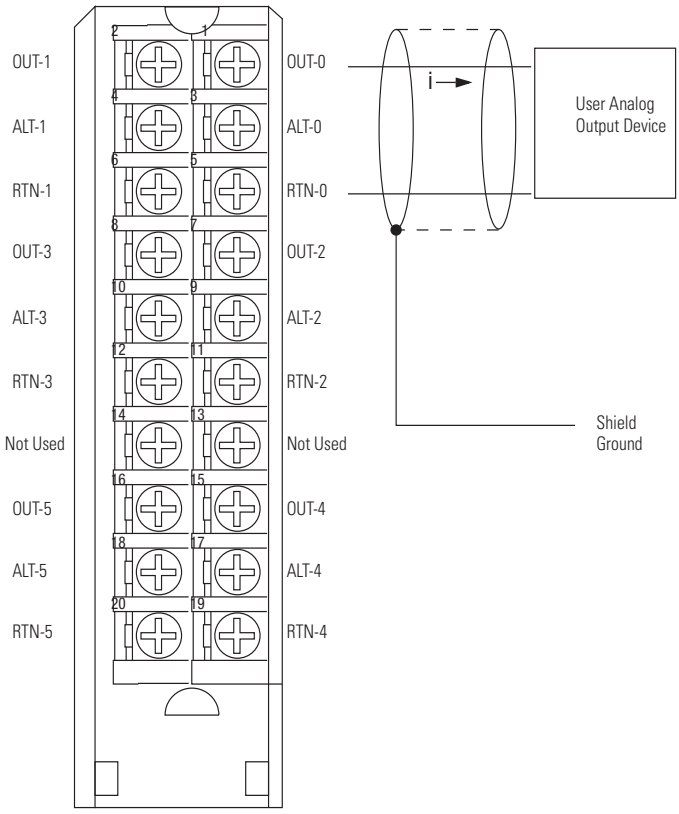

Place additional devices anywhere in the loop.

1756-0F6CI
551…1000 Ω

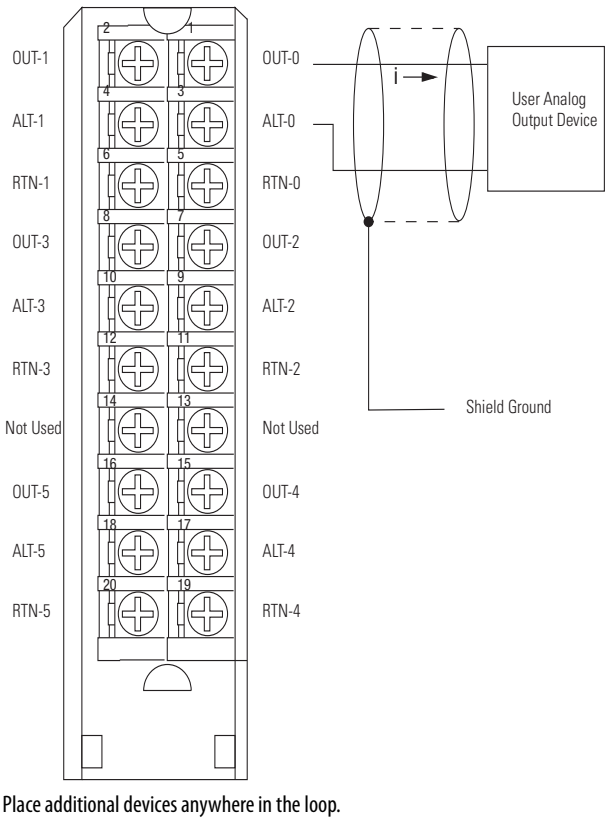

Place additional devices anywhere in the loop.

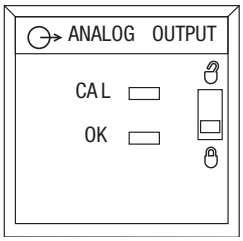

Signal and User Counts - 1756-0F6CI

Range	Low Signal and User Counts	High Signal and User Counts
0…21 mA	0 mA -32768 counts	21.074 mA 32767 counts

Technical Specifications - 1756-OF6CI

Attribute	1756-OF6CI
Outputs	6 individually isolated
Output range	0…21 mA
Resolution	13 bits across 21 mA (2.7 μA)
Current draw @ 5.1V	250 mA for 0…550 Ω loads terminated on OUTs and RTNs 250 mA for 551…1000 Ω loads terminated on OUTs and ALTs
Current draw @ 24V	225 mA for 0…550 Ω loads terminated on OUTs and RTNs 300 mA for 551…1000 Ω loads terminated on OUTs and ALTs
Total backplane power	6.7 W for 0…550 Ω range 8.5 W for 551…1000 Ω range
Power dissipation, max	5.5 W (0…550 Ω loads) 6.1 W (551…1000 Ω loads)
Thermal dissipation	18.76 BTU/hr (0…550 Ω loads) 20.80 BTU/hr (551…1000 Ω loads)
Open circuit detection	None
Overvoltage protection	24V DC
Short circuit protection	Electronically current limited to 21 mA or less
Drive capability	0…1000 Ω Separate field terminations for 0…550 Ω and 551…1000 Ω
Settling time	< 2 ms to 95% of final value with resistive loads
Calibrated accuracy @ 25 °C (77 °F)	Better than 0.1% of range from 4…21 mA
Calibration interval	6 months typical
Offset drift	1 μA/°C typical
Gain drift with temperature, nom	60 ppm/°C
Gain drift with temperature, max	100 ppm/°C
Module error	0.6% of range
Module scan time, max	25 ms floating point 10 ms integer
Data format	Integer mode (left justified, 2 s complement) IEEE 32-bit floating point
Module conversion method	R-Ladder DAC, monotonicity with no missing codes
Isolation voltage	250V (continuous), basic insulation type, output channels-to-backplane, and output channel-to-channel
Module keying	Electronic, software configurable
Removable terminal block	1756-TBNH 1756-TBSH
RTB keying	User-defined mechanical
Slot width	1
Wire category(1)	2
Enclosure type	None (open-style)
North American temperature code	T4A
IEC temperature code	T4

(1) Use this conductor category information for planning conductor routing as described in the system-level installation manual. See the Industrial Automation Wiring and Grounding Guidelines, publication 1770-4.1.

Environmental Specifications - 1756-OF6CI

Attribute	1756-OF6CI
Temperature, operating IEC 60068-2-1 (Test Ad, Operating Cold), IEC 60068-2-2 (Test Bd, Operating Dry Heat), IEC 60068-2-14 (Test Nb, Operating Thermal Shock)	0…60 °C (32…140 °F)
Temperature, surrounding air, max	60 °C (140 °F)
Temperature, nonoperating IEC 60068-2-1 (Test Ab, Unpackaged Nonoperating Cold), IEC 60068-2-2 (Test Bb, Unpackaged Nonoperating Dry Heat), IEC 60068-2-14 (Test Na, Unpackaged Nonoperating Thermal Shock)	-40…+85 °C (-40…+185 °F)
Relative humidity IEC 60068-2-30 (Test dB, Unpackaged Damp Heat)	5…95% noncondensing
Vibration IEC 60068-2-6 (Test Fc, Operating)	2 g @ 10…500 Hz
Shock, operating IEC 60068-2-27 (Test Ea, Unpackaged Shock)	30 g
Shock, nonoperating IEC 60068-2-27 (Test Ea, Unpackaged Shock)	50 g
Emissions	IEC 61000-6-4
ESD immunity IEC 61000-4-2	6 kV contact discharges 8 kV air discharges
Radiated RF immunity IEC 61000-4-3	10V/m with 1 kHz sine-wave 80% AM from 80…2000 MHz 10V/m with 200 Hz 50% Pulse 100% AM @ 900 MHz 10V/m with 200 Hz 50% Pulse 100% AM @ 1890 MHz 3V/m with 1 kHz sine-wave 80% AM from 2000…2700 MHz
EFT/B immunity IEC 61000-4-4	±2 kV at 5 kHz on shielded signal ports
Surge transient immunity IEC 61000-4-5	±2 kV line-earth (CM) on shielded signal ports
Conducted RF immunity IEC 61000-4-6	10V rms with 1 kHz sine-wave 80% AM from 150 kHz…80 MHz on shielded signal ports

Certifications - 1756-0F6CI

Certification (when product is marked)[1]	1756-0F6CI
UL	UL Listed Industrial Control Equipment. See UL File E65584.
CSA	CSA Certified Process Control Equipment. See CSA File LR54689C. CSA Certified Process Control Equipment for Class I, Division 2 Group A,B,C,D Hazardous Locations. See CSA File LR69960C.
CE	European Union 2014/30/EU EMC Directive, compliant with: • EN 61326-1; Meas./Control/Lab., Industrial Requirements • EN 61000-6-2; Industrial Immunity • EN 61000-6-4; Industrial Emissions • EN 61131-2; Programmable Controllers (Clause 8, Zone A & B) European Union 2014/35/EU LVD, compliant with: EN 61131-2; Programmable Controllers (Clause 11)
RCM	Australian Radiocommunications Act, compliant with: EN 61000-6-4; Industrial Emissions
Ex	European Union 2014/34/EU ATEX Directive, compliant with: • EN 60079-15; Potentially Explosive Atmospheres, Protection "n" • EN 60079-0; General Requirements II 3 G Ex nA IIC T4 X Gc
FM	FM Approved Equipment for use in Class I Division 2 Group A,B,C,D Hazardous Locations
KC	Korean Registration of Broadcasting and Communications Equipment, compliant with: Article 58-2 of Radio Waves Act, Clause 3
EAC	Russian Customs Union TR CU 020/2011 EMC Technical Regulation Russian Customs Union TR CU 004/2011 LV Technical Regulation

(1) See the Product Certification link at rok.auto/certifications for Declarations of Conformity, Certificates, and other certification details.

1756-OF6VI

ControlLogix voltage loop output analog module

1756-OF6VI

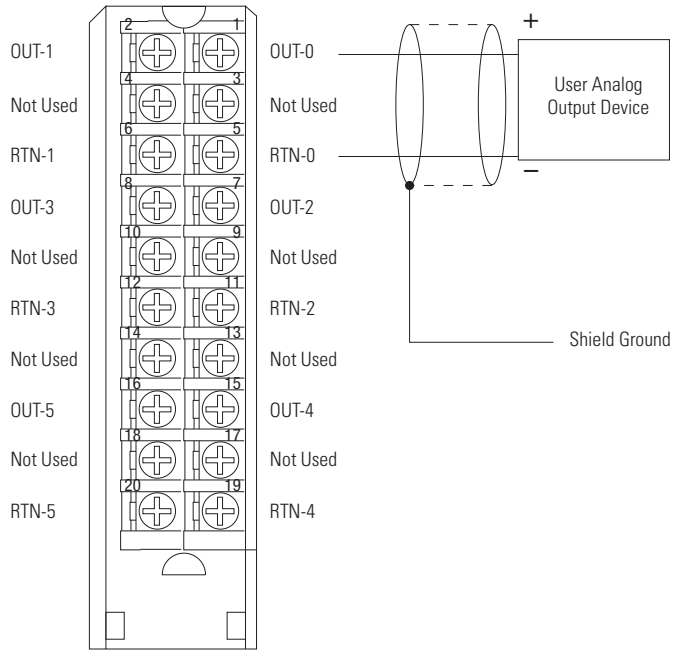

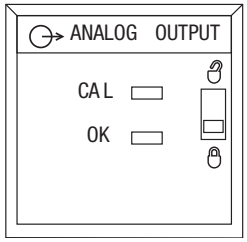

Place additional devices anywhere in the loop.

Signal and User Counts - 1756-OF6VI

Range	Low Signal and User Counts	High Signal and User Counts
±10V	-10.517V -32768 counts	10.517V 32767 counts

Technical Specifications - 1756-OF6VI

Attribute	1756-OF6VI
Outputs	6 individually isolated
Output range	± 10.5V
Resolution	14 bits across 21V (1.3 mV) (13 bits across 10.5V +sign bit)
Current draw @ 5.1V	250 mA
Current draw @ 24V	175 mA
Total backplane power	5.5 W
Power dissipation, max	4.85 W
Thermal dissipation	16.54 BTU/hr
Output impedance	<1 Ω
Open circuit detection	None
Overvoltage protection	24V DC
Short circuit protection	Electronically current limited
Drive capability	> 1000 Ω loads, 10 mA

Technical Specifications - 1756-OF6VI (continued)

Attribute	1756-OF6VI
Settling time	< 2 ms to 95% of final value with resistive loads
Calibrated accuracy @ 25 °C (77 °F)	Better than 0.1% of range
Calibration interval	6 months typical
Offset drift	60 µV/ °C typical
Gain drift with temperature, nom	50 ppm/°C
Gain drift with temperature, max	80 ppm/°C
Module error	0.5% of range
Module scan time, max	25 ms floating point 10 ms integer
Data format	Integer mode (left justified, 2 s complement) IEEE 32-bit floating point
Module conversion method	R-Ladder DAC, monotonicity with no missing codes
Isolation voltage	250V (continuous), basic insulation type, output channels-to-backplane, and output channel-to-channel
Module keying	Electronic, software configurable
Removable terminal block	1756-TBNH 1756-TBSH
RTB keying	User-defined mechanical
Slot width	1
Wire category	2(1)
Enclosure	None (open-style)
North American temperature code	T4A
IEC temperature code	T4

(1) Use this conductor category information for planning conductor routing as described in the system-level installation manual. See the Industrial Automation Wiring and Grounding Guidelines, publication 1770-4.1.

Environmental Specifications - 1756-OF6VI

Attribute	1756-OF6VI
Temperature, operating IEC 60068-2-1 (Test Ad, Operating Cold), IEC 60068-2-2 (Test Bd, Operating Dry Heat), IEC 60068-2-14 (Test Nb, Operating Thermal Shock)	0…60 °C (32…140 °F)
Temperature, surrounding air, max	60 °C (140 °F)
Temperature, nonoperating IEC 60068-2-1 (Test Ab, Unpackaged Nonoperating Cold), IEC 60068-2-2 (Test Bb, Unpackaged Nonoperating Dry Heat), IEC 60068-2-14 (Test Na, Unpackaged Nonoperating Thermal Shock)	-40…+85 °C (-40…+185 °F)
Relative humidity IEC 60068-2-30 (Test dB, Unpackaged Damp Heat)	5…95% noncondensing
Vibration IEC 60068-2-6 (Test Fc, Operating)	2 g @ 10…500 Hz
Shock, operating IEC 60068-2-27 (Test Ea, Unpackaged Shock)	30 g
Shock, nonoperating IEC 60068-2-27 (Test Ea, Unpackaged Shock)	50 g
Emissions	IEC 61000-6-4

Environmental Specifications - 1756-OF6VI (continued)

Attribute	1756-OF6VI
ESD immunity IEC 61000-4-2	6 kV contact discharges 8 kV air discharges
Radiated RF immunity IEC 61000-4-3	10V/m with 1 kHz sine-wave 80% AM from 80…2000 MHz 10V/m with 200 Hz 50% Pulse 100% AM @ 900 MHz 10V/m with 200 Hz 50% Pulse 100% AM @ 1890 MHz 3V/m with 1 kHz sine-wave 80% AM from 2000…2700 MHz
EFT/B immunity IEC 61000-4-4	±2 kV at 5 kHz on shielded signal ports
Surge transient immunity IEC 61000-4-5	±2 kV line-earth (CM) on shielded signal ports
Conducted RF Immunity IEC 61000-4-6	10V rms with 1 kHz sine-wave 80% AM from 150 kHz…80 MHz on shielded signal ports

Certifications - 1756-OF6VI

Certification (when product is marked)[1]	1756-OF6VI
UL	UL Listed Industrial Control Equipment. See UL File E65584.
CSA	CSA Certified Process Control Equipment. See CSA File LR54689C. CSA Certified Process Control Equipment for Class I, Division 2 Group A,B,C,D Hazardous Locations. See CSA File LR69960C.
CE	European Union 2014/30/EU EMC Directive, compliant with: • EN 61326-1; Meas./Control/Lab., Industrial Requirements • EN 61000-6-2; Industrial Immunity • EN 61000-6-4; Industrial Emissions • EN 61131-2; Programmable Controllers (Clause 8, Zone A & B) European Union 2014/35/EU LVD, compliant with: EN 61131-2; Programmable Controllers (Clause 11)
RCM	Australian Radiocommunications Act, compliant with: EN 61000-6-4; Industrial Emissions
Ex	European Union 2014/34/EU ATEX Directive, compliant with: • EN 60079-15; Potentially Explosive Atmospheres, Protection "n" • EN 60079-0; General Requirements II 3 G Ex nA IIC T4 X Gc
FM	FM Approved Equipment for use in Class I Division 2 Group A,B,C,D Hazardous Locations
KC	Korean Registration of Broadcasting and Communications Equipment, compliant with: Article 58-2 of Radio Waves Act, Clause 3
EAC	Russian Customs Union TR CU 020/2011 EMC Technical Regulation Russian Customs Union TR CU 004/2011 LV Technical Regulation

(1) See the Product Certification link at rok.auto/certifications for Declarations of Conformity, Certificates, and other certification details.

1756-OF8, 1756-OF8K

ControlLogix voltage/current output analog module

1756-OF8, 1756-OF8K Current

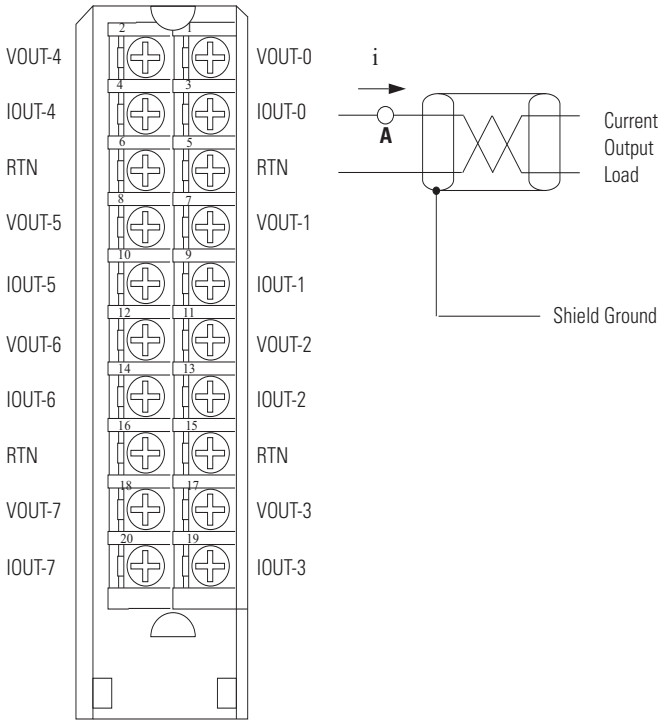

- Place additional loop devices (such as strip chart recorders) at the A location noted in the drawing.
- All terminals marked RTN are connected internally.

1756-OF8, 1756-OF8K Voltage

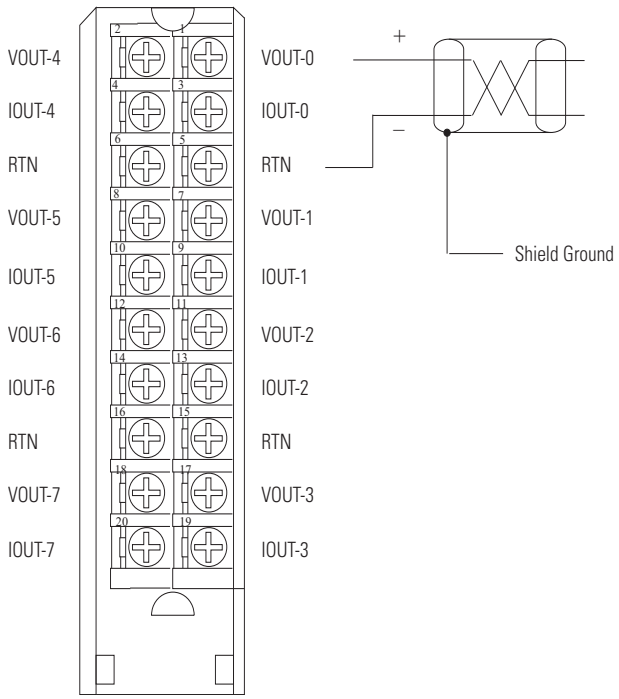

All terminals marked RTN are connected internally.

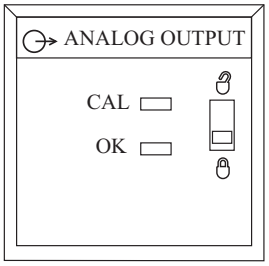

Signal and User Counts - 1756-OF8, 1756-OF8K

Range	Low Signal and User Counts	High Signal and User Counts
0…20 mA	0 mA -32768 counts	21.2916 mA 32767 counts
±10V	-10.4336V -32768 counts	10.4336V 32767 counts

Technical Specifications - 1756-OF8, 1756-OF8K

Attribute	1756-OF8, 1756-OF8K
Outputs	Eight voltages or current
Output range	± 10V 0…20 mA
Resolution	15 bits across 21 mA - 650 nA/bit 15 bits across 10.4V - 320 µV/bit
Current draw @ 5.1V	150 mA
Current draw @ 24V	210 mA
Total backplane power	5.8 W
Voltage and current ratings	Backplane: 5.1V DC, 150 mA max, 24V DC, 210 mA max Output Voltage: -10…+10V Output Current: 4…20mA
Power consumption	5.8 W backplane power
Power dissipation	5.8 W to 3.15 W; 0 ohm to 750 ohm loads
Thermal dissipation	16.78 BTU/hr
Open circuit detection	Current output only (Output must be set to >0.1 mA)
Overvoltage protection	24V DC
Short circuit protection	Electronically current limited to 21 mA or less
Drive capability	Voltage: > 2000 Ω Current: 0…750 Ω
Settling time	< 2 ms to 95% of final value with resistive loads
Calibrated accuracy @ 25 °C (77 °F)	Better than 0.05% of range from 4…21 mA, -10.4…10.4V
Calibration interval	12 months typical
Offset drift	50 µV/°C typical (Voltage mode) 0.1 µA/°C typical (Current mode)
Gain drift with temperature, max	Voltage: 25 ppm/°C max Current: 50 ppm/°C max
Module error	Voltage: 0.15% of range Current: 0.3% of range
Module scan time, min	12 ms floating point 8 ms integer
Data format	Integer mode (left justified, 2 s complement) IEEE 32-bit floating point
Module conversion method	R-Ladder DAC, monotonicity with no missing codes
Isolation voltage	250V (continuous), Reinforced insulation type, Output Channels to Backplane No isolation between individual Output Channels
Module keying	Electronic, software configurable
Removable terminal block	1756-TBNH 1756-TBSH
RTB keying	User-defined mechanical
Slot width	1

Technical Specifications - 1756-OF8, 1756-OF8K

Attribute	1756-OF8, 1756-OF8K
Wire size	1756-TBNH Single wire connection: 0.33…2.1 mm2(22…14 AWG) solid or stranded copper wire, rated at 105 °C (221 °F) or greater, 1.2 mm (3/64 in.) insulation max. Double wire connection: 0.33…1.3 mm2(22…16 AWG) solid or stranded copper wire, rated at 105 °C (221 °F) or greater, 1.2 mm (3/64 in.) insulation max. Do not wire more than two conductors on any terminal. 1756-TBSH Single wire connection, 0.33…2.1 mm2(22…14 AWG) solid, or stranded shielded copper wire rated at 105 °C (221 °F), or greater, 1.2 mm (3/64 in.) insulation max. Do not wire multiple conductors on any terminal.
Terminal block torque specs	1756-TBNH: 1.36 N•m (12 lb•in)
Wiring category(1)	1 - on signal ports
Enclosure type	None (open-style)
North American temp code	T4A
ATEX temp code	T4
IECEx temp code	T4

(1) Use this Conductor Category information for planning conductor routing. See the Industrial Automation Wiring and Grounding Guidelines, publication 1770-4.1.

Environmental Specifications - 1756-OF8, 1756-OF8K

Attribute	1756-OF8, 1756-OF8K
Temperature, operating IEC 60068-2-1 (Test Ad, Operating Cold), IEC 60068-2-2 (Test Bd, Operating Dry Heat), IEC 60068-2-14 (Test Nb, Operating Thermal Shock)	0 °C < Ta < +60 °C (+32 °F < Ta < +140 °F)
Temperature, surrounding air, max	60 °C (140 °F)
Temperature, nonoperating IEC 60068-2-1 (Test Ab, Unpackaged Nonoperating Cold), IEC 60068-2-2 (Test Bb, Unpackaged Nonoperating Dry Heat), IEC 60068-2-14 (Test Na, Unpackaged Nonoperating Thermal Shock)	-40…+85 °C (-40…+185 °F)
Relative humidity IEC 60068-2-30 (Test dB, Unpackaged Damp Heat)	5…95% noncondensing
Vibration IEC 60068-2-6 (Test Fc, Operating)	2 g @ 10…500 Hz
Shock, operating IEC 60068-2-27 (Test Ea, Unpackaged Shock)	30 g
Shock, nonoperating IEC 60068-2-27 (Test Ea, Unpackaged Shock)	50 g
Emissions	IEC 61000-6-4
ESD immunity IEC 61000-4-2	6 kV contact discharges 8 kV air discharges
Radiated RF immunity IEC 61000-4-3	10V/m with 1 kHz sine-wave 80% AM from 80…2000 MHz 10V/m with 200 Hz 50% Pulse 100% AM @ 900 MHz 10V/m with 200 Hz 50% Pulse 100% AM @ 1890 MHz 3V/m with 1 kHz sine-wave 80% AM from 2000…2700 MHz

Environmental Specifications - 1756-OF8, 1756-OF8K

Attribute	1756-OF8, 1756-OF8K
EFT/B immunity IEC 61000-4-4	±4 kV at 5 kHz on signal ports
Surge transient immunity IEC 61000-4-5	±1 kV line-line (DM) and ±2 kV line-earth (CM) on signal ports
Conducted RF immunity IEC 61000-4-6	10V rms with 1 kHz sine-wave 80% AM from 150 kHz…80 MHz

Certifications - 1756-OF8, 1756-OF8K

Certification (when product is marked)(1)	1756-OF8, 1756-OF8K
UL	UL Listed Industrial Control Equipment. See UL File E65584.
CSA	CSA Certified Process Control Equipment. See CSA File LR54689C. CSA Certified Process Control Equipment for Class I, Division 2 Group A,B,C,D Hazardous Locations. See CSA File LR69960C.
FM	FM Approved Equipment for use in Class I Division 2 Group A,B,C,D Hazardous Locations
CE	European Union 2014/30/EU EMC Directive, compliant with: • EN 61326-1; Meas./Control/Lab., Industrial Requirements • EN 61000-6-2; Industrial Immunity • EN 61000-6-4; Industrial Emissions • EN 61131-2; Programmable Controllers (Clause 8, Zone A & B) European Union 2014/35/EU LVD, compliant with: • EN 61010-2-201; Control Equipment Safety Requirements
RCM	Australian Radiocommunications Act, compliant with: EN 61000-6-4; Industrial Emissions
Ex	European Union 2014/34/EU ATEX Directive, compliant with: • EN 60079-0; General Requirements • EN 60079-15; Potentially Explosive Atmospheres, Protection "n" • II 3 G Ex nA IIC T4 Gc • DEMKO15ATEX1482X
IECEx	IECEx System, compliant with: • IEC 60079-0; General Requirements • IEC 60079-15; Potentially Explosive Atmospheres, Protection "n" • II 3 G Ex nA IIC T4 Gc • IECEx UL 15.0053X
KC	Korean Registration of Broadcasting and Communications Equipment, compliant with: Article 58-2 of Radio Waves Act, Clause 3
EAC	Russian Customs Union TR CU 020/2011 EMC Technical Regulation Russian Customs Union TR CU 004/2011 LV Technical Regulation

(1) See the Product Certification link at rok.auto/certifications for Declarations of Conformity, Certificates, and other certification details.

1756-OF8H, 1756-OF8HK

ControlLogix voltage/current output analog module with HART protocol

1756-OF8H, 1756-OF8HK

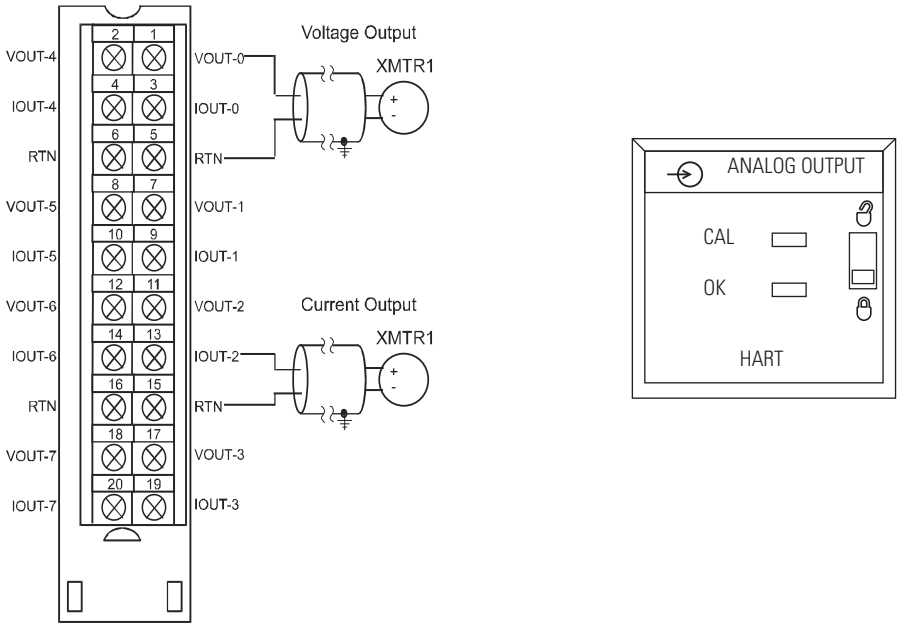

Signal and User Counts - 1756-OF8H, 1756-OF8HK

Range	Low Signal and User Counts	High Signal and User Counts
0…20 mA	0 mA -32768 counts	21.2916 mA 32767 counts
±10V	-10.4336V -32768 counts	10.4336V 32767 counts

Technical Specifications - 1756-OF8H, 1756-OF8HK

Attribute	1756-OF8H, 1756-OF8HK
Outputs	Eight voltages or current, one HART modem per module
Output range	±10V 0…20 mA 4…20 mA
Resolution	15…16 bits for all ranges
Voltage and current ratings	Backplane: 5.1V DC, 230 mA, 24V DC, 230 mA Output voltage range: -10…10.4V Output current range: 0…20 mA, 4…20 mA
Total backplane power	6.54 W
Power dissipation	4.92 W
Thermal dissipation	16.78 BTU/hr
Isolation voltage	50V (continuous), Basic insulation type, Output Channels to Backplane No isolation between individual output Channels
Output impedance	–

Technical Specifications - 1756-OF8H, 1756-OF8HK

Attribute	1756-OF8H, 1756-OF8HK
Open circuit detection time	Current output only (output must be set to < 0.1 mA)
Overvoltage protection, max	±24V DC
Drive capability	–
Load reactance, max	Voltage: 1 µF Current: 10 µH
Settling time	Current (no HART): < 23 ms to 95% with resistive loads Current (with HART): < 37 ms to 95% with resistive loads Voltage: < 8.5 ms to 95% with resistive loads
Calibrated accuracy @ 25 °C (77 °F) with HART disabled	Voltage: Better than 0.1% of range Current: Better than 0.15% of range
Calibration interval	12 months typical
Offset drift	100 µV/°C typical 200 nA/°C typical
Gain drift with temperature	Voltage: 20 ppm/°C Current: 35 ppm/°C
Module error	Voltage: 0.15% of range Current: 0.3% of range
Module HART scan time	Analog: 12 ms, min, floating point. HART: typically 1 s per HART channel enabled. Estimate 10 s if all 8 channels have HART enabled. Pass through messages, handheld communicators, secondary masters, communication errors, or configuration changes can significantly increase the update time
Data format	Integer mode (left justified, 2 s complement) IEEE 32-bit floating point
Input conversion method	Successive approximation
Output conversion method	R-Ladder DAC, monotonicity with no missing codes
Module keying	Electronic, software configurable
Removable terminal block	1756-TBNH 1756-TBSH
RTB keying	User-defined mechanical
Slot width	1
Wire size	1756-TBNH Single wire connection: 0.33…2.1 mm2(22…14 AWG) solid or stranded shielded copper wire, rated at 105 °C (221 °F) or greater, 1.2 mm (3/64 in.) insulation max Double wire connection: 0.33…1.3 mm2(22…16 AWG) solid or stranded copper wire, rated at 105 °C (221 °F) or greater, 1.2 mm (3/64 in.) insulation max 1756-TBSH Single wire connection: 0.33…2.1 mm2(22…14 AWG) solid or stranded shielded copper wire, rated at 105 °C (221 °F) or greater, 1.2 mm (3/64 in.) insulation max
Terminal block torque specs	1756-TBNH 1.36 N•m (12 lb·in)
Wire category[1]	2 - on signal ports
Wire type	Copper
Enclosure type rating	None (open-style)
North American temp code	T4
ATEX temp code	T4
IECEx temp code	T4

(1) Use this Conductor Category information for planning conductor routing. See the Industrial Automation Wiring and Grounding Guidelines, publication 1770-4.1.

Environmental Specifications - 1756-OF8H, 1756-OF8HK

Attribute	1756-OF8H, 1756-OF8HK
Temperature, operating IEC 60068-2-1 (Test Ad, Operating Cold), IEC 60068-2-2 (Test Bd, Operating Dry Heat), IEC 60068-2-14 (Test Nb, Operating Thermal Shock)	0 °C < Ta < +60 °C (+32 °F < Ta < +140 °F)
Temperature, surrounding air, max	60 °C (140 °F)
Temperature, nonoperating IEC 60068-2-1 (Test Ab, Unpackaged Nonoperating Cold), IEC 60068-2-2 (Test Bb, Unpackaged Nonoperating Dry Heat), IEC 60068-2-14 (Test Na, Unpackaged Nonoperating Thermal Shock)	-40…+85 °C (-40…+185 °F)
Relative humidity IEC 60068-2-30 (Test dB, Unpackaged Damp Heat)	5…95% noncondensing
Vibration IEC 60068-2-6 (Test Fc, Operating)	2 g @ 10…500 Hz
Shock, operating IEC 60068-2-27 (Test Ea, Unpackaged Shock)	30 g
Shock, nonoperating IEC 60068-2-27 (Test Ea, Unpackaged Shock)	50 g
Emissions	IEC 61000-6-4
ESD immunity IEC 61000-4-2	6 kV contact discharges 8 kV air discharges
Radiated RF immunity IEC 61000-4-3	10V/m with 1 kHz sine-wave 80% AM from 80…2000 MHz 10V/m with 200 Hz 50% Pulse 100% AM @ 900 MHz 10V/m with 200 Hz 50% Pulse 100% AM @ 1890 MHz 1V/m with 1 kHz sine-wave 80% AM from 2000…2700 MHz
EFT/B immunity IEC 61000-4-4	±2 kV at 5 kHz on signal ports
Surge transient immunity IEC 61000-4-5	±2 kV line-earth (CM) on shielded ports
Conducted RF immunity IEC 61000-4-6	10V rms with 1 kHz sine-wave 80% AM from 150 kHz…80 MHz

Certifications - 1756-OF8H, 1756-OF8HK

Certification (when product is marked)[1]	1756-OF8H,1756-OF8HK
c-UL-us	UL Listed Industrial Control Equipment, certified for US and Canada. See UL File E65584. UL Listed for Class I, Division 2 Group A,B,C,D Hazardous Locations, certified for U.S. and Canada. See UL File E194810.
CE	European Union 2014/30/EU EMC Directive, compliant with: • EN 61326-1; Meas./Control/Lab., Industrial Requirements • EN 61000-6-2; Industrial Immunity • EN 61000-6-4; Industrial Emissions • EN 61131-2; Programmable Controllers (Clause 8, Zone A & B)
RCM	Australian Radiocommunications Act, compliant with: EN 61000-6-4: Industrial Emissions
Ex	European Union 2014/34/EU ATEX Directive, compliant with: • EN 60079-0; General Requirements • EN 60079-15; Potentially Explosive Atmospheres, Protection "n" • II 3 G Ex nA IIC T4 Gc • DEMKO12ATEX1219040X
IECEx	IECEx System, compliant with: • IEC 60079-0; General Requirements • IEC 60079-15; Potentially Explosive Atmospheres, Protection "n" • II 3 G Ex nA IIC T4 Gc • IECEx UL 16.0109X
KC	Korean Registration of Broadcasting and Communications Equipment, compliant with: Article 58-2 of Radio Waves Act, Clause 3
EAC	Russian Customs Union TR CU 020/2011 EMC Technical Regulation Russian Customs Union TR CU 004/2011 LV Technical Regulation

(1) See the Product Certification link at rok.auto/certifications for Declarations of Conformity, Certificates, and other certification details.

1756-OF8I, 1756-OF8IK

ControlLogix isolated voltage/current output analog module.

1756-OF8I, 1756-OF8IK Module Wiring Diagram - Current Mode

IMPORTANT: Remember the following:

- If separate power sources are used, do not exceed the specific isolation voltage as listed in the specifications.
- Place additional devices anywhere in the loop.

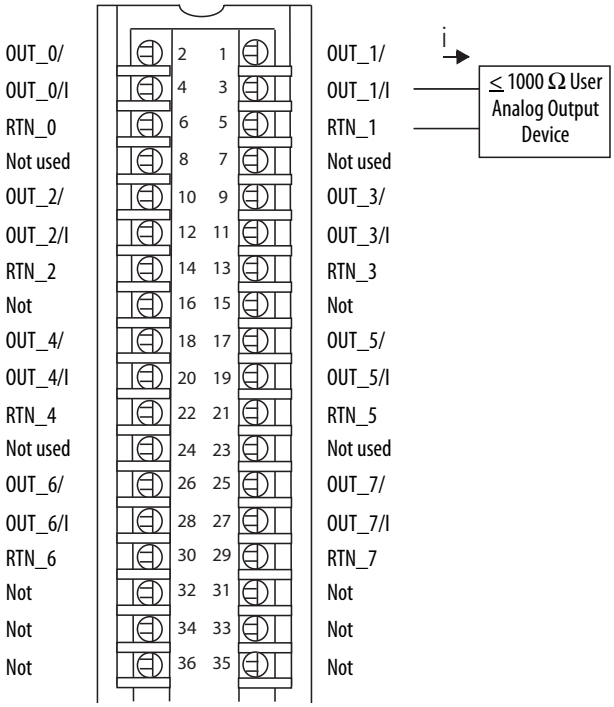

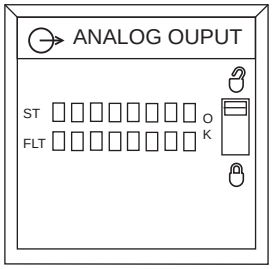

1756-OF8I, 1756-OF8IK Module Wiring Diagram - Voltage Mode

IMPORTANT: Remember the following:

- If separate power sources are used, do not exceed the specific isolation voltage as listed in the specifications.
- Place additional devices anywhere in the loop.

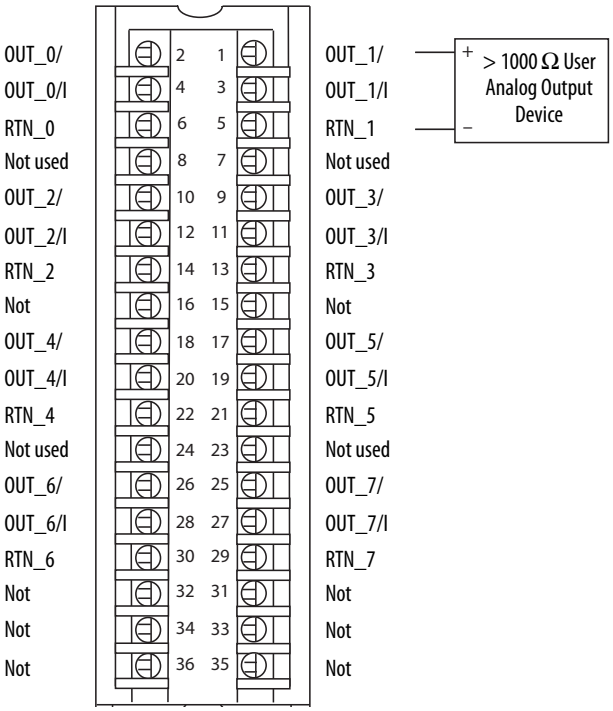

Technical Specifications - 1756-OF8I, 1756-OF8IK

Attribute	1756-OF8I, 1756-OF8IK
Outputs	Eight isolated channels - Any combination of voltage or current mode
Output range	-10…10V 0…10V 0…5V 0…20 mA
Resolution	16-bit ±10.5V (0.32 mV/count) 0…10.5V (0.16 mV/count) 0…5.25V (0.08 mV/count) 0…21 mA (0.32 µA/count)
Current draw @ 5.1V	200 mA
Current draw @ 24V	Voltage or Current mode with 250 Ω loads = 220 mA Current mode with 500 Ω loads = 275 mA Current mode with 750 Ω loads = 340 mA Current mode with 1000 Ω loads = 385 mA
Total backplane power	Voltage mode = 6.3 W Current mode with 250 Ω loads = 6.3 W Current mode with 500 Ω loads = 7.6 W Current mode with 750 Ω loads = 9.2 W Current mode with 1000 Ω loads = 10.2 W
Power dissipation	Voltage mode: 5.4 W (18.4 BTU/hr) Current mode with 250 Ω loads: 5.4 W (18.4 BTU/hr) Current mode with 500 Ω loads: 5.8 W (19.8 BTU/hr) Current mode with 750 Ω loads: 6.5 W (22.2 BTU/hr) Current mode with 1000 Ω loads: 6.7 W (22.9 BTU/hr)
Thermal dissipation	Voltage mode = 18.4 BTU/hr Current mode with 250 Ω loads = 18.4 BTU/hr Current mode with 500 Ω loads = 19.8 BTU/hr Current mode with 750 Ω loads = 22.2 BTU/hr Current mode with 1000 Ω loads = 22.9 BTU/hr
Output impedance	46 Ω (Current output)
Open circuit detection	Current output = Yes
Short circuit detection	Voltage output = Yes
Overvoltage protection	±30V DC (voltage/current)
Drive capability	Current output = 0…1000 Ω Voltage output = >1000 Ω
Settling time	< 2 ms to 95% of final value with Resistive loads
Calibrated accuracy @ 25 °C (77 °F)	0.05%
Module error over full temperature range	0.1%
Module scan time, min	1 ms
Data format	IEEE 32-bit floating point
Module conversion method	R-Ladder DAC, monotonicity with no missing codes
Isolation voltage	250V (continuous), reinforced insulation type, outputs to backplane 250V (continuous), basic insulation type, output to output
Module keying	Electronic, software configurable

Technical Specifications - 1756-OF8I, 1756-OF8IK

Attribute	1756-OF8I, 1756-OF8IK
Removable terminal block	1756-TBCH 1756-TBS6H
RTB keying	User-defined mechanical
Slot width	1
Wire size	0.33…2.1 mm^2 (22…14 AWG) solid or stranded shielded copper wire, rated at 90 °C (194 °F) or greater, 1.2 mm (3/64 in.) insulation max
Wire category(1)	2 - on signal ports
Enclosure type	None (open-style)
North American temperature code	T4
IEC temperature code	T4

(1) Use this conductor category information for planning conductor routing as described in the system-level installation manual. See the Industrial Automation Wiring and Grounding Guidelines, publication 1770-4.1.

Environmental Specifications - 1756-OF8I, 1756-OF8IK

Attribute	1756-OF8I, 1756-OF8IK
Temperature, operating IEC 60068-2-1 (Test Ad, Operating Cold), IEC 60068-2-2 (Test Bd, Operating Dry Heat), IEC 60068-2-14 (Test Nb, Operating Thermal Shock)	0…60 °C (32…140 °F)
Temperature, surrounding air, max	60 °C (140 °F)
Temperature, nonoperating IEC 60068-2-1 (Test Ab, Unpackaged Nonoperating Cold), IEC 60068-2-2 (Test Bb, Unpackaged Nonoperating Dry Heat), IEC 60068-2-14 (Test Na, Unpackaged Nonoperating Thermal Shock)	-40…+85 °C (-40…+185 °F)
Relative humidity IEC 60068-2-30 (Test dB, Unpackaged Damp Heat)	5…95% noncondensing
Vibration IEC 60068-2-6 (Test Fc, Operating)	2 g @ 10…500 Hz
Shock, operating IEC 60068-2-27 (Test Ea, Unpackaged Shock)	30 g
Shock, nonoperating IEC 60068-2-27 (Test Ea, Unpackaged Shock)	50 g
Emissions	IEC 61000-6-4
ESD immunity IEC 61000-4-2	6 kV contact discharges 8 kV air discharges
Radiated RF immunity IEC 61000-4-3	10V/m with 1 kHz sine-wave 80% AM from 80… 2000 MHz 10V/m with 200 Hz 50% Pulse 100% AM @ 900 MHz 10V/m with 200 Hz 50% Pulse 100% AM @ 1890 MHz 3V/m with 1 kHz sine-wave 80% AM from 2000…2700 MHz
EFT/B immunity IEC 61000-4-4	±4 kV at 5 kHz on shielded signal ports
Surge transient immunity IEC 61000-4-5	±2 kV line-earth (CM) on shielded signal ports
Conducted RF immunity IEC 61000-4-6	10V rms with 1 kHz sine-wave 80% AM from 150 kHz…80 MHz

Certifications - 1756-OF8I, 1756-OF8IK

Certification (when product is marked)[1]	1756-OF8I, 1756-OF8IK
c-UL-us	UL Listed Industrial Control Equipment, certified for US and Canada. See UL File E65584. UL Listed for Class I, Division 2 Group A,B,C,D Hazardous Locations, certified for U.S. and Canada. See UL File E194810.
CE	European Union 2014/30/EU EMC Directive, compliant with: • EN 61326-1; Meas./Control/Lab., Industrial Requirements • EN 61000-6-2; Industrial Immunity • EN 61000-6-4; Industrial Emissions • EN 61131-2; Programmable Controllers (Clause 8, Zone A & B) European Union 2014/35/EU LVD, compliant with: EN 61131-2; Programmable Controllers (Clause 11)
RCM	Australian Radiocommunications Act, compliant with: EN 61000-6-4; Industrial Emissions
Ex	European Union 2014/34/EU ATEX Directive, compliant with: • EN 60079-0; General Requirements • EN 60079-15; Potentially Explosive Atmospheres, Protection "n" • II 3 G Ex nA IIC T4 Gc • DEMKO13ATEX1325026X
IECEx	IECEx System, compliant with: • IEC 60079-0; General Requirements • IEC 60079-15; Potentially Explosive Atmospheres, Protection "n" • II 3 G Ex nA IIC T4 Gc • IECEx UL 14.0008X
KC	Korean Registration of Broadcasting and Communications Equipment, compliant with: Article 58-2 of Radio Waves Act, Clause 3
EAC	Russian Customs Union TR CU 020/2011 EMC Technical Regulation Russian Customs Union TR CU 004/2011 LV Technical Regulation

(1) See the Product Certification link at rok.auto/certifications for Declarations of Conformity, Certificates, and other certification details.

1756-OF8IH, 1756-OF8IHK

ControlLogix isolated HART current analog output module

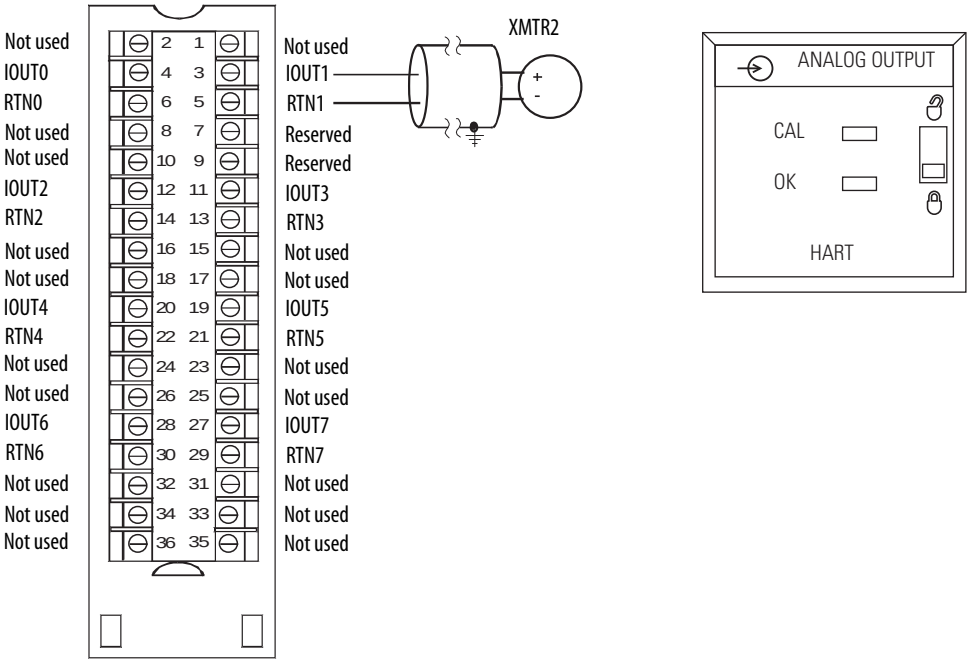

Signal and User Counts - 1756-OF8IH, 1756-OF8IHK

Range	Low Signal	High Signal
0…21 mA	0 mA	21.2916 mA

Technical Specifications - 1756-OF8IH, 1756-OF8IHK

Attribute	1756-OF8IH, 1756-OF8IHK
Outputs	8 current
Output range	0…20 mA 4…20 mA
Resolution	15 bits across 24 mA, 732 nA per bit
Voltage and current ratings	Backplane: 220 mA @ 5.1V DC, 360 mA @ 24V DC Output voltage range: 5…30V DC Output current range: 0…20 mA, 4…20 mA
Current draw @ 24V	400 mA (estimated)
Power dissipation, max	6.5 W nominal (< 6.4 W with 50 Ω load on all channels) (<6.5 W with 250 Ω load on all channels) (<6.7 W with 750 Ω load on all channels)
Open circuit detection	Current output only (output must be set >= 0.1 mA)
Overvoltage protection, max	±24V DC
Output short circuit protection	Current electronically limited to <= 21 mA with no damage
Drive capability	50…750 Ω with short circuit survival
Load reactance, max	10 µH

Technical Specifications - 1756-OF8IH, 1756-OF8IHK

Attribute	1756-OF8IH, 1756-OF8IHK
Settling time	HART not enabled: < 23 ms to 95% with resistive loads HART enabled: < 100 ms to 95% with resistive loads
Calibrated accuracy @ 25 °C (77 °F)	0.15% @ 4…20 mA
Calibration interval	12 months typical
Offset drift	±3 ppm of full scale range/°C (72 nA/°C typical)
Gain drift with temperature	±4 ppm of full scale range/°C
Module error	0.3% @ 4…20 mA
Module scan time	Estimate 1 s if all channels are HART enabled Pass through messages, handheld communications, secondary masters, communication errors, or configuration changes can significantly increase the update time.
Data format	IEEE 32-bit floating point
Output conversion method	R-Ladder DAC
Isolation voltage	250V (continuous) Reinforced Insulation Type, outputs to backplane. Basic Insulation Type, output to output, and outputs to ground.
Module keying	Electronic, software configurable
Removable terminal block	1756-TBCH 1756-TBS6H
RTB keying	User-defined mechanical
Slot width	1
Wire size	1756-TBCH Single wire connection: 0.33…2.1 mm2(22…14 AWG) solid or stranded shielded copper wire, rated at 105 °C (221 °F) or greater, 1.2 mm (3/64 in.) insulation max 1756-TBS6H Single wire connection: 0.33…2.1 mm2(22…14 AWG) solid or stranded shielded copper wire, rated at 105 °C (221 °F) or greater, 1.2 mm (3/64 in.) insulation max
Terminal block torque specs	1756-TBCH 0.5 N•m (4.4 lb•in)
Wiring category(1)	2 - on signal ports
Wire type	Copper
Enclosure type rating	None (open-style)
North American temp code	T4A
ATEX temp code	T4
IECEx temp code	T4

(1) Use this Conductor Category information for planning conductor routing. See the Industrial Automation Wiring and Grounding Guidelines, publication 1770-4.1.

Environmental Specifications - 1756-OF8IH, 1756-OF8IHK

Attribute	1756-OF8IH, 1756-OF8IHK
Temperature, operating IEC 60068-2-1 (Test Ad, Operating Cold), IEC 60068-2-2 (Test Bd, Operating Dry Heat), IEC 60068-2-14 (Test Nb, Operating Thermal Shock)	0 °C < Ta < +60 °C (+32 °F < Ta < +140 °F)
Temperature, surrounding air, max	60 °C (140 °F)
Temperature, nonoperating IEC 60068-2-1 (Test Ab, Unpackaged Nonoperating Cold), IEC 60068-2-2 (Test Bb, Unpackaged Nonoperating Dry Heat), IEC 60068-2-14 (Test Na, Unpackaged Nonoperating Thermal Shock	-40…+85 °C (-40…+185 °F)
Relative humidity IEC 60068-2-30 (Test dB, Unpackaged Damp Heat)	5…95% noncondensing
Vibration (operating) IEC 60068-2-6 (Test Fc, Operating)	2 g @ 10…500 Hz
Shock, operating IEC 60068-2-27 (Test Ea, Unpackaged Shock)	30 g
Shock, nonoperating IEC 60068-2-27 (Test Ea, Unpackaged Shock)	30 g
Emissions	IEC 61000-6-4
ESD immunity IEC 61000-4-2	6 kV contact discharges 8 kV air discharges
Radiated RF immunity IEC 61000-4-3	10V/m with 1 kHz sine-wave 80% AM from 80…2000 MHz 10V/m with 200 Hz square wave 50% Pulse 100% AM @ 900 MHz 10V/m with 200 Hz square wave 50% Pulse 100% AM @ 1890 MHz 10V/m with 1 kHz sine-wave 80% AM from 2000…2700 MHz
EFT/B immunity IEC 61000-4-4	±2 kV @ 5 kHz on signal ports
Surge transient immunity IEC 61000-4-5	±2 kV line-earth (CM) on shielded ports
Conducted RF immunity IEC 61000-4-6	10V rms with 1 kHz sine-wave 80% AM from 150 kHz…80 MHz

Certifications - 1756-OF8IH, 1756-OF8IHK

Certification (when product is marked)[1]	1756-OF8IH, 1756-OF8IHK
c-UL-us	UL Listed Industrial Control Equipment, certified for US and Canada. See UL File E65584. UL Listed for Class I, Division 2 Group A,B,C,D Hazardous Locations, certified for U.S. and Canada. See UL File E194810.
CE	European Union 2014/30/EU EMC Directive, compliant with: • EN 61326-1; Meas./Control/Lab., Industrial Requirements • EN 61000-6-2; Industrial Immunity • EN 61000-6-4; Industrial Emissions • EN 61131-2; Programmable Controllers (Clause 8, Zone A and B) European Union 2014/35/EU LVD, compliant with: • EN 61131-2; Programmable Controllers (Clause 11)
RCM	Australian Radiocommunications Act, compliant with: EN 61000-6-4; Industrial Emissions
Ex	European Union 2014/34/EU ATEX Directive, compliant with: • EN 60079-0; General Requirements • EN 60079-15; Potentially Explosive Atmospheres, Protection "n" • II 3 G Ex nA IIC T4 Gc • DEMKO14ATEX1238X
IECEx	IECEx System, compliant with: • IEC 60079-0; General Requirements • IEC 60079-15; Potentially Explosive Atmospheres, Protection "n" • II 3 G Ex nA IIC T4 Gc • IECEx UL 16.0110X
KC	Korean Registration of Broadcasting and Communications Equipment, compliant with: Article 58-2 of Radio Waves Act, Clause 3
EAC	Russian Customs Union TR CU 020/2011 EMC Technical Regulation Russian Customs Union TR CU 004/2011 LV Technical Regulation

(1) See the Product Certification link at rok.auto/certifications for Declarations of Conformity, Certificates, and other certification details.

1756-OG16

ControlLogix TTL output module

1756-OG16 Standard Wiring

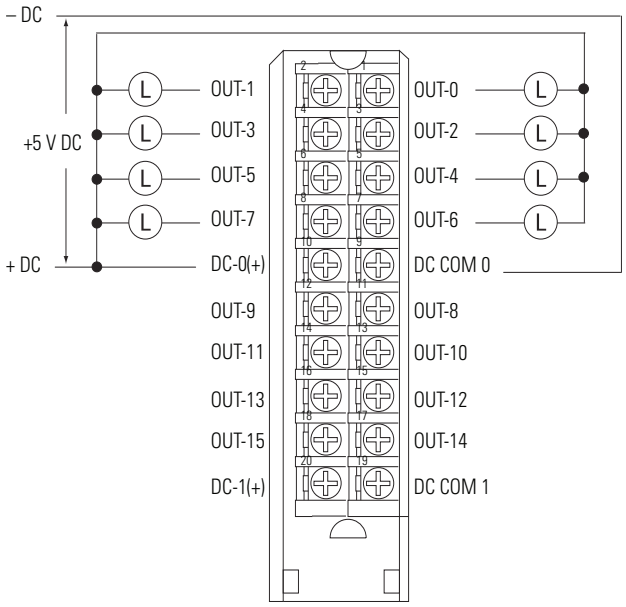

1756-OG16 CE Compliant Wiring

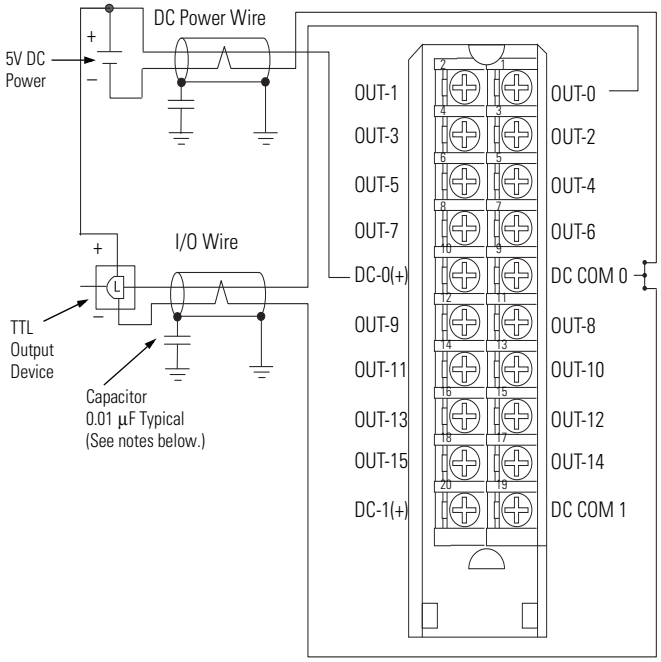

Simplified Schematic

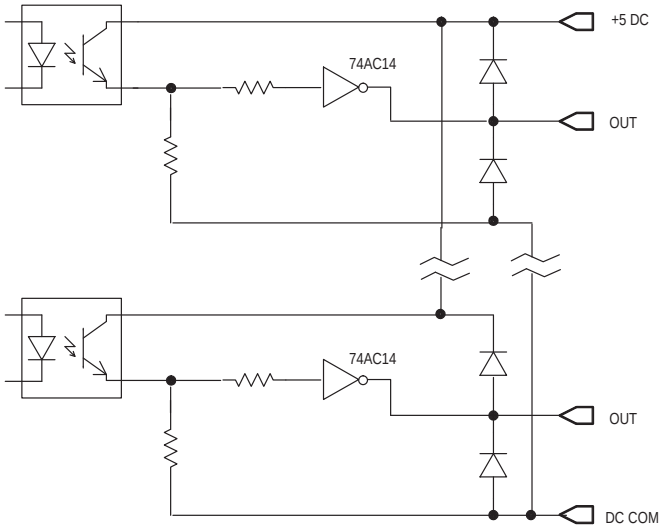

IMPORTANT: I/O cables must be shielded type and cable length must be <10 m (32.8 ft) for maximum EMI noise immunity.

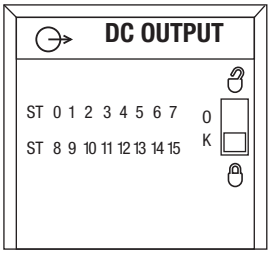

Low to True Format - 1756-OG16

- 0...0.4V DC = Output guaranteed to be in on-state
- 0.4...4.5V DC = Output state not guaranteed
- 4.5...5.5V DC = Output guaranteed to be in off-state

Technical Specifications - 1756-OG16

Attribute	1756-OG16
Outputs	16 (8 points/group)
Voltage category	5V DC TTL (Low=True)[1]
Operating voltage range	4.5…5.5V DC source, 50 mV P-P ripple max
Output delay time (resistive load) Off to On (5V-to-0V DC transition) On to Off (0V-to-5V DC transition)	 45 µs nom/450 µs max 145 µs nom/700 µs max
Current draw @ 5.1V	210 mA
Current draw @ 24V	2 mA
Total backplane power	1.12 W
Power dissipation, max	1.5 W @ 60 °C (140 °F)
Thermal dissipation	5.2 BTU/hr @ 60 °C (140 °F)
Off-state leakage current per point, max	0.1 mA per point
On-state voltage drop, max	0.4V DC
Continuous current, max	24 mA
Load current per point, max	24 mA
Load current per module, max	384 mA
Load current	0.15 mA
Scheduled outputs	Synchronization within 16.7 s max, reference to the Coordinated System Time
States in Fault mode per point	Hold last state, On or Off (Off is default)
States in Program mode per point	Hold last state, On or Off (Off is default)
Isolation voltage	250V (continuous), basic insulation type, outputs-to-backplane, and output group-to-group No isolation between individual group outputs
Module keying	Electronic, software configurable
Fusing	Not protected. A fused IFM is recommended to help protect outputs.
Removable terminal block	1756-TBNH 1756-TBSH
RTB keying	User-defined mechanical
Slot width	1
Wire category	2[2]
Enclosure type	None (open-style)
North American temperature code	T5
IEC temperature code	T5

(1) TTL outputs are inverted (0 to +0.4V DC = low voltage = True = On.) Use a NOT instruction in your program to convert to traditional True - High logic.

(2) Use this conductor category information for planning conductor routing as described in the system-level installation manual. See the Industrial Automation Wiring and Grounding Guidelines, publication 1770-4.1.

Environmental Specifications - 1756-0G16

Attribute	1756-0G16
Temperature, operating IEC 60068-2-1 (Test Ad, Operating Cold), IEC 60068-2-2 (Test Bd, Operating Dry Heat), IEC 60068-2-14 (Test Nb, Operating Thermal Shock)	0…60 °C (32…140 °F)
Temperature, surrounding air, max	60 °C (140 °F)
Temperature, nonoperating IEC 60068-2-1 (Test Ab, Unpackaged Nonoperating Cold), IEC 60068-2-2 (Test Bb, Unpackaged Nonoperating Dry Heat), IEC 60068-2-14 (Test Na, Unpackaged Nonoperating Thermal Shock)	-40…+85 °C (-40…+185 °F)
Relative humidity IEC 60068-2-30 (Test dB, Unpackaged Damp Heat)	5…95% noncondensing
Vibration IEC 60068-2-6 (Test Fc, Operating)	2 g @ 10…500 Hz
Shock, operating IEC 60068-2-27 (Test Ea, Unpackaged Shock)	30 g
Shock, nonoperating IEC 60068-2-27 (Test Ea, Unpackaged Shock)	50 g
Emissions	IEC 61000-6-4
ESD immunity IEC 61000-4-2	6 kV contact discharges 8 kV air discharges
Radiated RF immunity IEC 61000-4-3	10V/m with 1 kHz sine-wave 80% AM from 80…2000 MHz 10V/m with 200 Hz 50% Pulse 100% AM @ 900 MHz 10V/m with 200 Hz 50% Pulse 100% AM @ 1890 MHz 3V/m with 1 kHz sine-wave 80% AM from 2000…2700 MHz
EFT/B immunity IEC 61000-4-4	±4 kV at 5 kHz on signal ports
Conducted RF immunity IEC 61000-4-6	10V rms with 1 kHz sine-wave 80% AM from 150 kHz…80 MHz

Certifications - 1756-0G16

Certification (when product is marked)(1)	1756-0G16
UL	UL Listed Industrial Control Equipment. See UL File E65584.
CSA	CSA Certified Process Control Equipment. See CSA File LR54689C. CSA Certified Process Control Equipment for Class I, Division 2 Group A,B,C,D Hazardous Locations. See CSA File LR69960C.
CE	European Union 2014/30/EU EMC Directive, compliant with: • EN 61326-1; Meas./Control/Lab., Industrial Requirements • EN 61000-6-2; Industrial Immunity • EN 61000-6-4; Industrial Emissions • EN 61131-2; Programmable Controllers (Clause 8, Zone A & B)
RCM	Australian Radiocommunications Act, compliant with: EN 61000-6-4; Industrial Emissions
Ex	European Union 2014/34/EU ATEX Directive, compliant with: • EN 60079-15; Potentially Explosive Atmospheres, Protection "n" • EN 60079-0; General Requirements II 3 G Ex nA IIC T5 X Gc
KC	Korean Registration of Broadcasting and Communications Equipment, compliant with: Article 58-2 of Radio Waves Act, Clause 3
EAC	Russian Customs Union TR CU 020/2011 EMC Technical Regulation Russian Customs Union TR CU 004/2011 LV Technical Regulation

(1) See the Product Certification link at rok.auto/certifications for Declarations of Conformity, Certificates, and other certification details.

1756-OH8I

ControlLogix DC (90...146V) isolated output module

Simplified Schematic

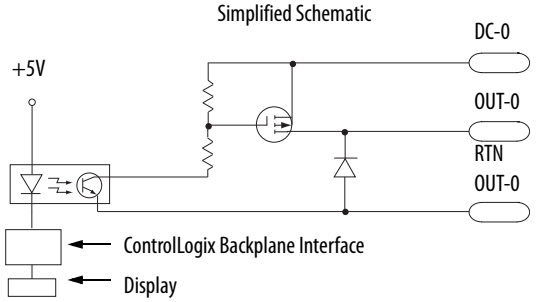

Surge Current Chart

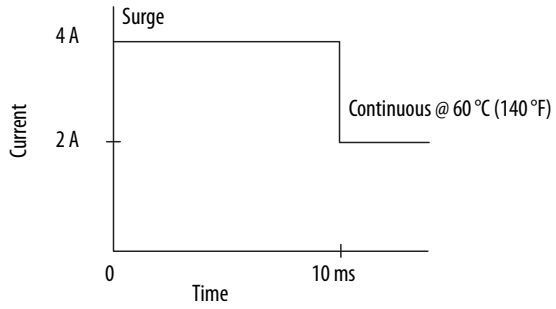

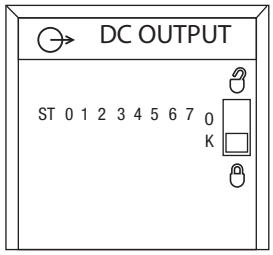

1756-OH81

Isolated Wiring

Non-Isolated Wiring

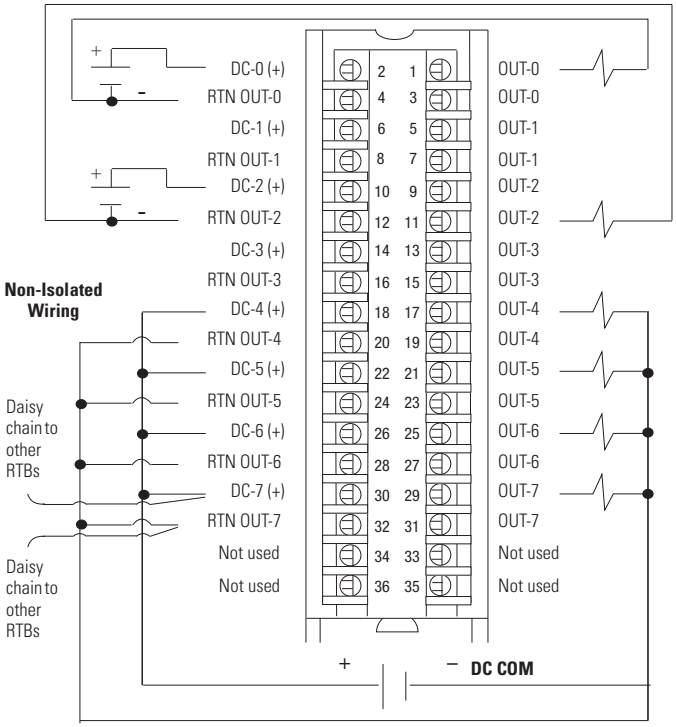

Technical Specifications - 1756-OH8I

Attribute	1756-OH8I
Outputs	8 individually isolated
Voltage category	120V DC sink/source
Operating voltage range	90…146V DC
Output delay time Off to On On to Off	 2 ms max 2 ms max
Current draw @ 5.1V	210 mA
Current draw @ 24V	2 mA
Total backplane power	1.11 W
Power dissipation, max	3.3 W @ 60 °C (140 °F)
Thermal dissipation	11.25 BTU/hr
Off-state leakage current, max	1 mA per point

Technical Specifications - 1756-OH8I (continued)

Attribute	1756-OH8I
On-state voltage drop, max	2V DC @ 2 A
Current per point, max	2 A @ 60 °C (140 °F)
Current per module, max	8 A @ 60 °C (140 °F)
Surge current per point	4 A for 10 ms per point, repeatable every 1 s @ 60 °C (140 °F)
Load current, min	2 mA per point
Scheduled outputs	Synchronization within 16.7 s max, reference to the Coordinated System Time
States in Fault mode per point	Hold last state, On or Off (Off is default)
States in Program mode per point	Hold last state, On or Off (Off is default)
Isolation voltage	250V (continuous), basic insulation type, outputs-to-backplane, and output-to-output
Module keying	Electronic, software configurable
Fusing	Not protected. A fused IFM is recommended to help protect outputs.
Removable terminal block	1756-TBCH 1756-TBS6H
RTB keying	User-defined mechanical
Slot width	1
Wire category	1(1)
Enclosure type	None (open-style)
North American temperature code	T4A

(1) Use this conductor category information for planning conductor routing as described in the system-level installation manual. See the Industrial Automation Wiring and Grounding Guidelines, publication 1770-4.1.

Environmental Specifications - 1756-OH8I

Attribute	1756-OH8I
Temperature, operating IEC 60068-2-1 (Test Ad, Operating Cold), IEC 60068-2-2 (Test Bd, Operating Dry Heat), IEC 60068-2-14 (Test Nb, Operating Thermal Shock)	0…60 °C (32…140 °F)
Temperature, surrounding air, max	60 °C (140 °F)
Temperature, nonoperating IEC 60068-2-1 (Test Ab, Unpackaged Nonoperating Cold), IEC 60068-2-2 (Test Bb, Unpackaged Nonoperating Dry Heat), IEC 60068-2-14 (Test Na, Unpackaged Nonoperating Thermal Shock)	-40…+85 °C (-40…+185 °F)
Relative humidity IEC 60068-2-30 (Test dB, Unpackaged Damp Heat)	5…95% noncondensing
Vibration IEC 60068-2-6 (Test Fc, Operating)	2 g @ 10…500 Hz
Shock, operating IEC 60068-2-27 (Test Ea, Unpackaged Shock)	30 g
Shock, nonoperating IEC 60068-2-27 (Test Ea, Unpackaged Shock)	50 g
Emissions	IEC 61000-6-4
ESD immunity IEC 61000-4-2	6 kV contact discharges 8 kV air discharges

Environmental Specifications - 1756-OH8I (continued)

Attribute	1756-OH8I
Radiated RF immunity IEC 61000-4-3	10V/m with 1 kHz sine-wave 80% AM from 80…2000 MHz 10V/m with 200 Hz 50% Pulse 100% AM @ 900 MHz 10V/m with 200 Hz 50% Pulse 100% AM @ 1890 MHz 1V/m with 1 kHz sine-wave 80% AM from 2000…2700 MHz
EFT/B immunity IEC 61000-4-4	±4 kV at 5 kHz on signal ports
Surge transient immunity IEC 61000-4-5	±1 kV line-line (DM) and ±2 kV line-earth (CM) on signal ports
Conducted RF immunity IEC 61000-4-6	10V rms with 1 kHz sine-wave 80% AM from 150 kHz…80 MHz

Certifications - 1756-OH8I

Certification (when product is marked)[1]	1756-OH8I
UL	UL Listed Industrial Control Equipment. See UL File E65584.
CSA	CSA Certified Process Control Equipment. See CSA File LR54689C. CSA Certified Process Control Equipment for Class I, Division 2 Group A,B,C,D Hazardous Locations. See CSA File LR69960C.
CE	European Union 2014/30/EU EMC Directive, compliant with: • EN 61326-1; Meas./Control/Lab., Industrial Requirements • EN 61000-6-2; Industrial Immunity • EN 61000-6-4; Industrial Emissions • EN 61131-2; Programmable Controllers (Clause 8, Zone A & B) European Union 2014/35/EU LVD, compliant with: EN 61131-2; Programmable Controllers (Clause 11)
RCM	Australian Radiocommunications Act, compliant with: EN 61000-6-4; Industrial Emissions
FM	FM Approved Equipment for use in Class I Division 2 Group A,B,C,D Hazardous Locations
KC	Korean Registration of Broadcasting and Communications Equipment, compliant with: Article 58-2 of Radio Waves Act, Clause 3
EAC	Russian Customs Union TR CU 020/2011 EMC Technical Regulation Russian Customs Union TR CU 004/2011 LV Technical Regulation

(1) See the Product Certification (when product is marked) link at rok.auto/certifications for Declarations of Conformity, Certificates, and other certification details.

1756-ON8

ControlLogix 24V AC output module

Simplified Schematic

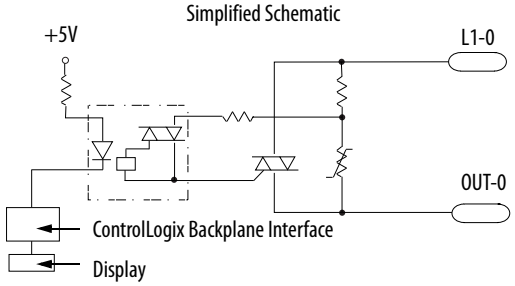

Surge Current Chart

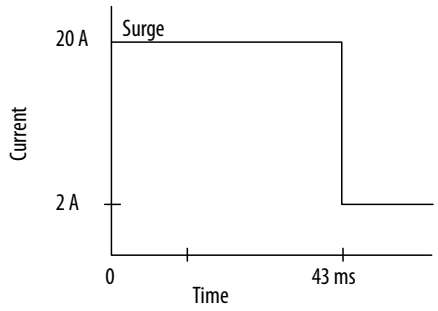

1756-ON8

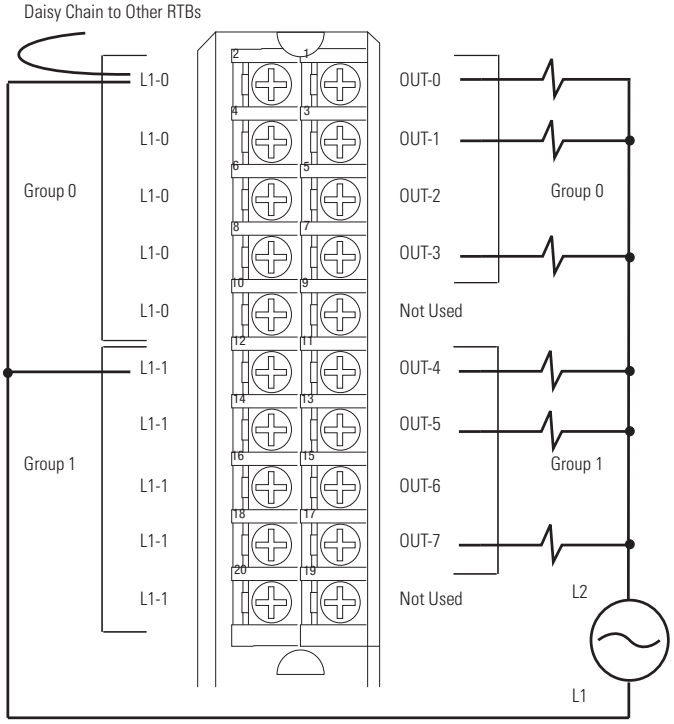

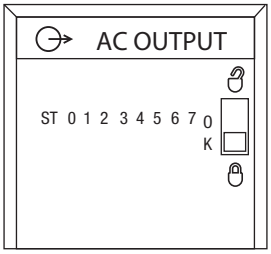

Technical Specifications - 1756-ON8

Attribute	1756-ON8
Outputs	8 (4 points/group)
Voltage category	24V AC 50/60 Hz
Operating voltage range[1]	10…30V AC, current >50 mA, 47…63Hz 16…30V AC, current <50 mA, 47…63Hz
Output delay time Off to On	9.3 ms @ 60 Hz 11 ms @ 50 Hz
On to Off	9.3 ms @ 60 Hz 11 ms @ 50 Hz
Voltage and current ratings	Backplane: 5.1V DC, 200 mA 24V DC, 2 mA Output: 10…30V AC, 50/60Hz, 2 A Pilot Duty (DC-13/SQ) MDL: 5A/4A 30 °C/60 °C
Current draw @ 5.1V	200 mA
Current draw @ 24V	2 mA
Total backplane power	1.07 W
Power dissipation, max	5.1 W @ 60 °C (140 °F)
Thermal dissipation	17.39 BTU/hr
Off-state leakage current, max	3 mA per point
On-state voltage drop, max	1.5V peak @ 2 A 6V peak @ load current < 50 mA
Current per point, max	2 A @ 60 °C (140 °F)
Current per module, max	5 A @ 30 °C (86 °F) linear derating 4 A @ 60 °C (140 °F) linear derating
Surge current per point	20 A for 43 ms per point, repeatable every 2 s @ 60 °C (140 °F)
Load current, min	10 mA per point
Commutating voltage	4 V/µs for loads > 50 mA 0.2 V/µs for loads < 50 mA[3]
Scheduled outputs	Synchronization within 16.7 s max, reference to the Coordinated System Time
States in Fault mode per point	Hold last state, On or Off (Off is default)
States in Program mode per point	Hold last state, On or Off (Off is default)
Isolation voltage	250V (continuous), basic insulation type, outputs-to-backplane, and output group-to-group No isolation between individual group outputs
Module keying	Electronic, software configurable
Fusing	Not protected. A fused IFM is recommended to help protect outputs.
Removable terminal block	1756-TBNH 1756-TBSH
RTB keying	User-defined mechanical
Slot width	1

Technical Specifications - 1756-ON8 (continued)

Attribute	1756-ON8
Wire size	1756-TBNH Single wire connection: 0.33…2.1 mm^2 (22…14 AWG) solid or stranded shielded copper wire rated at 105 °C (221 °F), or greater, 1.2 mm (3/64 in.) insulation max. Double wire connection: 0.33…1.3 mm^2 (22…16 AWG) solid or stranded copper wire rated at 105 °C (221 °F), or greater, 1.2 mm (3/64 in.) insulation max. 1756-TBSH Single wire connection: 0.33…2.1 mm^2 (22…14 AWG) solid or stranded shielded copper wire rated at 105 °C (221 °F), or greater, 1.2 mm^2 (3/64 in.) insulation max.
Terminal block torque specs	1756-TBNH 1.36 N•m (12 lb·in)
Wire category(2)	1 - on signal ports
Enclosure type	None (open style)
North American temperature code	T4A
ATEX temperature code	T4
IECEx temperature code	T4

(1) UL certification for 24V 50/60 Hz nominal. Rockwell Automation specified to 10…30V, 47…63 Hz.

(2) Use this conductor category information for planning conductor routing as described in the system-level installation manual. See the Industrial Automation Wiring and Grounding Guidelines, publication 1770-4.1.

(3) The commutating dv/dt of the output voltage (OUTPUT to L2) should not exceed 0.2V/µs for loads under 50 mA. The commutating dv/dt rating of the module for loads 50…500 mA (OUTPUT to L2) is 4V/µs maximum. If the commutating dv/dt rating of the TRIAC is exceeded, the TRIAC could latch on. If the commutating dv/dt rating is exceeded in the 10…50 mA range, a resistor can be added AC across the output and L2. The purpose of this resistor is to increase the total output current to 50 mA (I=V/R). At 50 mA and above, the module has a higher commutating dv/dt rating. When adding a resistor for the output to L2, be sure it is rated for the power that it dissipates (P=(V**2)/R). If the commutating dv/dt rating is exceeded in the 50…500 mA range, the L1 AC waveform could be at fault. Be sure that the waveform is a good sinusoid, void of any anomalies such as distorted, or flattened sections.

Environmental Specifications - 1756-ON8

Attribute	1756-ON8
Temperature, operating IEC 60068-2-1 (Test Ad, Operating Cold), IEC 60068-2-2 (Test Bd, Operating Dry Heat), IEC 60068-2-14 (Test Nb, Operating Thermal Shock)	0 °C < Ta < 60 °C (32 °F < Ta < 140 °F)
Temperature, surrounding air, max	60 °C (140 °F)
Temperature, nonoperating IEC 60068-2-1 (Test Ab, Unpackaged Nonoperating Cold), IEC 60068-2-2 (Test Bb, Unpackaged Nonoperating Dry Heat), IEC 60068-2-14 (Test Na, Unpackaged Nonoperating Thermal Shock)	-40…+85 °C (-40…+185 °F)
Relative humidity IEC 60068-2-30 (Test dB, Unpackaged Damp Heat)	5…95% noncondensing
Vibration IEC 60068-2-6 (Test Fc, Operating)	2 g @ 10…500 Hz
Shock, operating IEC 60068-2-27 (Test Ea, Unpackaged Shock)	30 g
Shock, nonoperating IEC 60068-2-27 (Test Ea, Unpackaged Shock)	30 g
Emissions	IEC 61000-6-4
ESD immunity IEC 61000-4-2	6 kV contact discharges 8 kV air discharges

Environmental Specifications - 1756-ON8 (continued)

Attribute	1756-ON8
Radiated RF immunity IEC 61000-4-3	10V/m with 1 kHz sine-wave 80% AM from 80…2000 MHz 10V/m with 200 Hz 50% Pulse 100% AM @ 900 MHz 10V/m with 200 Hz 50% Pulse 100% AM @ 1890 MHz 3V/m with 1 kHz sine-wave 80% AM from 2000…2700 MHz
EFT/B immunity IEC 61000-4-4	±4 kV at 5 kHz on signal ports
Conducted RF immunity IEC 61000-4-6	10V rms with 1 kHz sine-wave 80% AM from 150 kHz…80 MHz

Certifications - 1756-ON8

Certification (when product is marked)(1)	1756-ON8
UL	UL Listed Industrial Control Equipment. See UL File E65584.
CSA	CSA Certified Process Control Equipment. See CSA File LR54689C. CSA Certified Process Control Equipment for Class I, Division 2 Group A,B,C,D Hazardous Locations. See CSA File LR69960C.
CE	European Union 2014/30/EU EMC Directive, compliant with: • EN 61326-1; Meas./Control/Lab., Industrial Requirements • EN 61000-6-2; Industrial Immunity • EN 61000-6-4; Industrial Emissions • EN 61131-2; Programmable Controllers (Clause 8, Zone A & B) European Union 2014/35/EU LVD, compliant with: EN 61131-2; Programmable Controllers (Clause 11)
RCM	Australian Radiocommunications Act, compliant with: EN 61000-6-4; Industrial Emissions
Ex	European Union 2014/34/EU ATEX Directive, compliant with: • EN 60079-15; Potentially Explosive Atmospheres, Protection "n" • EN 60079-0; General Requirements II 3 G Ex nA IIC T4 X Gc • II 3 G Ex nA IIC T4 Gc • DEMKO16ATEX1792X
IECEx	IECEx System, compliant with: • IEC 60079-0; General Requirements • IEC 60079-15; Potentially Explosive Atmospheres, Protection "n" • II 3 G Ex nA IIC T4 Gc • IECExUL16.0151X
FM	FM Approved Equipment for use in Class I Division 2 Group A,B,C,D Hazardous Locations
KC	Korean Registration of Broadcasting and Communications Equipment, compliant with: Article 58-2 of Radio Waves Act, Clause 3
EAC	Russian Customs Union TR CU 020/2011 EMC Technical Regulation Russian Customs Union TR CU 004/2011 LV Technical Regulation

(1) See the Product Certification link at rok.auto/certifications for Declarations of Conformity, Certificates, and other certification details.

1756-0V16E

ControlLogix DC (10...30V) electronically fused, sinking output module

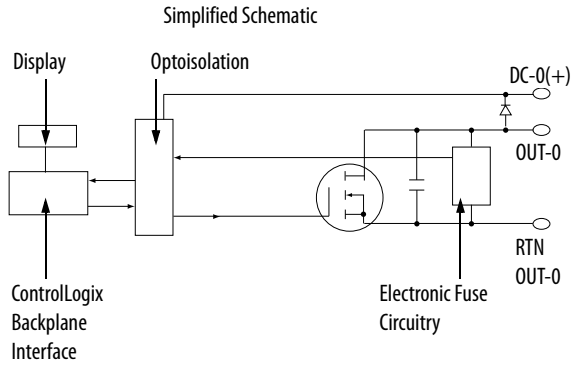

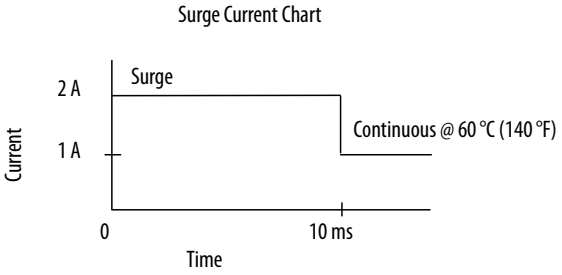

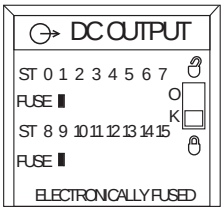

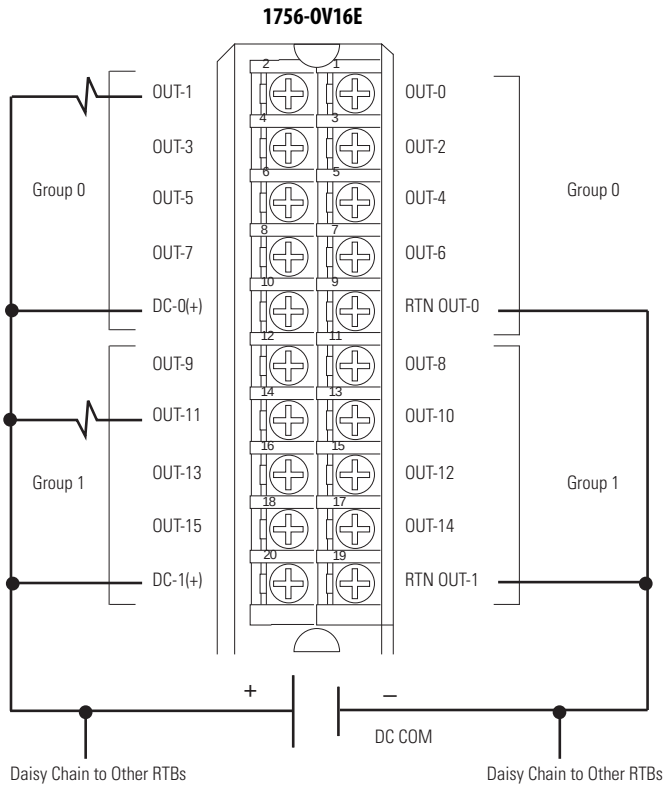

Diagnostic Specifications - 1756-0V16E

Attribute	1756-0V16E
Short trip	5 A for 20 ms @ 24V DC (output on, then short) 5 A for 20 ms @ 24V DC (output on into short)
Time stamp of diagnostics	±1 ms

Technical Specifications - 1756-0V16E

Attribute	1756-0V16E
Outputs	16 electronically fused (8 points/group)
Pilot duty	1 A (DC-13/SR)
Voltage category	12/24V DC sink
Output delay time Off to On On to Off	 75 µs nom/1 ms max 360 µs nom/1 ms max

Technical Specifications - 1756-OV16E (continued)

Attribute	1756-OV16E
Operating voltage range	10…30V DC
Current draw @ 5.1V	210 mA
Current draw @ 24V	2 mA
Total backplane power	1.12 W
Power dissipation, max	6.72 W @ 60 °C (140 °F)
Thermal dissipation	22.94 BTU/hr
Off-state leakage current per point, max	1 mA per point
On-state voltage drop, max	700 mV DC @ 1 A
Current per point, max	1 A @ 60 °C (140 °F)
Current per module, max	8 A @ 60 °C (140 °F)
Surge current per point	2 A for 10 ms per Point, repeatable every 2 s @ 60 °C (140 °F)
Load current, min	2 mA per point
Scheduled outputs	Synchronization within 16.7 s max, reference to the Coordinated System Time
States in Fault mode per point	Hold last state, On or Off (Off is default)
States in Program mode per point	Hold last state, On or Off (Off is default)
Isolation voltage	250V (continuous), basic insulation type, outputs-to-backplane, and output group-to-group No isolation between individual group outputs
Module keying	Electronic, software configurable
Fusing	Electronically fused per group
Removable terminal block	1756-TBNH 1756-TBSH
RTB keying	User-defined mechanical
Slot width	1
Wire category	1(1)
Enclosure type	None (open-style)
North American temperature code	T4
IEC temperature code	T4

(1) Use this conductor category information for planning conductor routing as described in the system-level installation manual. See the Industrial Automation Wiring and Grounding Guidelines, publication 1770-4.1.

Environmental Specifications - 1756-OV16E

Attribute	1756-OV16E
Temperature, operating IEC 60068-2-1 (Test Ad, Operating Cold), IEC 60068-2-2 (Test Bd, Operating Dry Heat), IEC 60068-2-14 (Test Nb, Operating Thermal Shock)	0…60 °C (32…140 °F)
Temperature, surrounding air, max	60 °C (140 °F)
Temperature, nonoperating IEC 60068-2-1 (Test Ab, Unpackaged Nonoperating Cold), IEC 60068-2-2 (Test Bb, Unpackaged Nonoperating Dry Heat), IEC 60068-2-14 (Test Na, Unpackaged Nonoperating Thermal Shock)	-40…+85 °C (-40…+185 °F)
Relative humidity IEC 60068-2-30 (Test dB, Unpackaged Damp Heat)	5…95% noncondensing
Vibration IEC 60068-2-6 (Test Fc, Operating)	2 g @ 10…500 Hz
Shock, operating IEC 60068-2-27 (Test Ea, Unpackaged Shock)	30 g
Shock, nonoperating IEC 60068-2-27 (Test Ea, Unpackaged Shock)	50 g
Emissions	IEC 61000-6-4
ESD immunity IEC 61000-4-2	6 kV contact discharges 8 kV air discharges
Radiated RF immunity IEC 61000-4-3	10V/m with 1 kHz sine-wave 80% AM from 80…2000 MHz 10V/m with 200 Hz 50% Pulse 100% AM @ 900 MHz 10V/m with 200 Hz 50% Pulse 100% AM @ 1890 MHz 3V/m with 1 kHz sine-wave 80% AM from 2000…2700 MHz
EFT/B immunity IEC 61000-4-4	±4 kV at 5 kHz on signal ports
Surge transient immunity IEC 61000-4-5	±1 kV line-line (DM) and ±2 kV line-earth (CM) on signal ports
Conducted RF immunity IEC 61000-4-6	10V rms with 1 kHz sine-wave 80% AM from 150 kHz…80 MHz

Certifications - 1756-0V16E

Certification (when product is marked)[1]	1756-0V16E
UL	UL Listed Industrial Control Equipment. See UL File E65584.
CSA	CSA Certified Process Control Equipment. See CSA File LR54689C. CSA Certified Process Control Equipment for Class I, Division 2 Group A,B,C,D Hazardous Locations. See CSA File LR69960C.
CE	European Union 2014/30/EU EMC Directive, compliant with: • EN 61326-1; Meas./Control/Lab., Industrial Requirements • EN 61000-6-2; Industrial Immunity • EN 61000-6-4; Industrial Emissions • EN 61131-2; Programmable Controllers (Clause 8, Zone A & B) European Union 2014/35/EU LVD, compliant with: EN 61131-2; Programmable Controllers (Clause 11)
RCM	Australian Radiocommunications Act, compliant with: EN 61000-6-4; Industrial Emissions
Ex	European Union 2014/34/EU ATEX Directive, compliant with: • EN 60079-15; Potentially Explosive Atmospheres, Protection "n" • EN 60079-0; General Requirements II 3 G Ex nA IIC T4 X Gc
FM	FM Approved Equipment for use in Class I Division 2 Group A,B,C,D Hazardous Locations
KC	Korean Registration of Broadcasting and Communications Equipment, compliant with: Article 58-2 of Radio Waves Act, Clause 3
EAC	Russian Customs Union TR CU 020/2011 EMC Technical Regulation Russian Customs Union TR CU 004/2011 LV Technical Regulation

(1) See the Product Certification link at rok.auto/certifications for Declarations of Conformity, Certificates, and other certification details.

1756-OV32E

ControlLogix DC (10...30V) electronically fused, sinking output module

Simplified Schematic

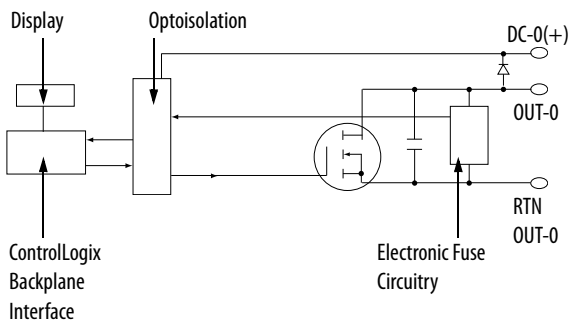

Surge Current Chart

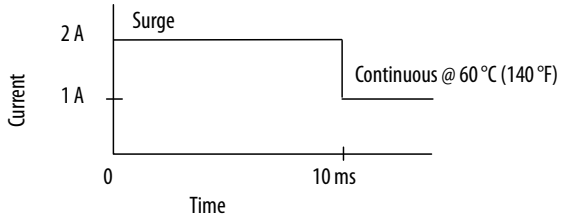

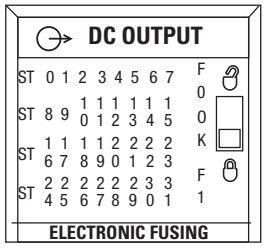

1756-OV32E

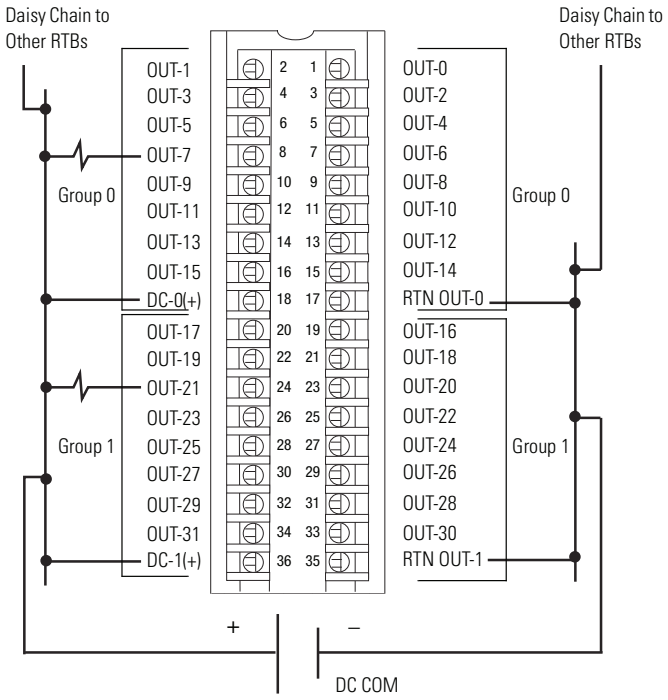

Diagnostic Specifications - 1756-OV32E

Attribute	1756-OV32E
Short trip	5 A for 20 ms @ 24V DC (output on then short) 5 A for 20 ms @ 24V DC (output into short)
Time stamp of diagnostics	±1 ms

Technical Specifications - 1756-OV32E

Attribute	1756-OV32E
Outputs	32 electronically fused (16 points/group)
Voltage category	12/24V DC sink
Operating voltage range	10…30V DC
Output delay time (24V to 0V DC transition) Off to On On to Off	 75 µs nom/300 µs max 230 µs nom/1 ms max
Current draw @ 5.1V	390 mA
Current draw @ 24V	2 mA
Total backplane power	2.04 W
Power dissipation, max	5.88 W @ 60 °C (140 °F)
Thermal dissipation	20.1 BTU/hr
Off-state leakage current per point, max	1 mA per point
On-state voltage drop, max	350 mV DC @ 0.5 A
Current per point, max	0.5 A @ 50 °C (122 °F) linear derating 0.35 A @ 60 °C (140 °F)
Current per group, max	8 A @ 50 °C (122 °F) linear derating 5 A @ 60 °C (140 °F)
Current per module, max	16 A @ 50 °C (122 °F) linear derating 10 A @ 60 °C (140 °F)
Surge current per point	2 A for 10 ms per point, repeatable every 2 s @ 60 °C (140 °F)
Load current, min	2 mA per output
Scheduled outputs	Synchronization within 16.7 s max, reference to the Coordinated System Time
States in Fault mode per point	Hold last state, On or Off (Off is default)
States in Program mode per point	Hold last state, On or Off (Off is default)
Isolation voltage	250V (continuous), basic insulation type, outputs-to-backplane, and output group-to-group No isolation between individual group outputs
Module keying	Electronic, software configurable
Fusing	Electronically fused per group
Removable terminal block	1756-TBCH 1756-TBS6H
RTB keying	User-defined mechanical
Slot width	1
Wire category	1(1)
Enclosure type	None (open-style)
North American temperature code	T4
IEC temperature code	T4

(1) Use this conductor category information for planning conductor routing as described in the system-level installation manual. See the Industrial Automation Wiring and Grounding Guidelines, publication 1770-4.1.

Environmental Specifications - 1756-0V32E

Attribute	1756-0V32E
Temperature, operating IEC 60068-2-1 (Test Ad, Operating Cold), IEC 60068-2-2 (Test Bd, Operating Dry Heat), IEC 60068-2-14 (Test Nb, Operating Thermal Shock)	0…60 °C (32…140 °F)
Temperature, surrounding air, max	60 °C (140 °F)
Temperature, nonoperating IEC 60068-2-1 (Test Ab, Unpackaged Nonoperating Cold), IEC 60068-2-2 (Test Bb, Unpackaged Nonoperating Dry Heat), IEC 60068-2-14 (Test Na, Unpackaged Nonoperating Thermal Shock)	-40…+85 °C (-40…+185 °F)
Relative humidity IEC 60068-2-30 (Test dB, Unpackaged Damp Heat)	5…95% noncondensing
Vibration IEC 60068-2-6 (Test Fc, Operating)	2 g @ 10…500 Hz
Shock, operating IEC 60068-2-27 (Test Ea, Unpackaged Shock)	30 g
Shock, nonoperating IEC 60068-2-27 (Test Ea, Unpackaged Shock)	50 g
Emissions	IEC 61000-6-4
ESD immunity IEC 61000-4-2	6 kV contact discharges 8 kV air discharges
Radiated RF immunity IEC 61000-4-3	10V/m with 1 kHz sine-wave 80% AM from 80…2000 MHz 10V/m with 200 Hz 50% Pulse 100% AM @ 900 MHz 10V/m with 200 Hz 50% Pulse 100% AM @ 1890 MHz 3V/m with 1 kHz sine-wave 80% AM from 2000…2700 MHz
EFT/B immunity IEC 61000-4-4	±4 kV at 5 kHz on signal ports
Surge transient immunity IEC 61000-4-5	±1 kV line-line (DM) and ±2 kV line-earth (CM) on signal ports
Conducted RF immunity IEC 61000-4-6	10V rms with 1 kHz sine-wave 80% AM from 150 kHz…80 MHz

Certifications - 1756-0V32E

Certification (when product is marked)[1]	1756-0V32E
UL	UL Listed Industrial Control Equipment. See UL File E65584.
CSA	CSA Certified Process Control Equipment. See CSA File LR54689C. CSA Certified Process Control Equipment for Class I, Division 2 Group A,B,C,D Hazardous Locations. See CSA File LR69960C.
CE	European Union 2014/30/EU EMC Directive, compliant with: • EN 61326-1; Meas./Control/Lab., Industrial Requirements • EN 61000-6-2; Industrial Immunity • EN 61000-6-4; Industrial Emissions • EN 61131-2; Programmable Controllers (Clause 8, Zone A & B) European Union 2014/35/EU LVD, compliant with: EN 61131-2; Programmable Controllers (Clause 11)
RCM	Australian Radiocommunications Act, compliant with: EN 61000-6-4; Industrial Emissions
Ex	European Union 2014/34/EU ATEX Directive, compliant with: • EN 60079-15; Potentially Explosive Atmospheres, Protection "n" • EN 60079-0; General Requirements II 3 G Ex nA IIC T4 X Gc
KC	Korean Registration of Broadcasting and Communications Equipment, compliant with: Article 58-2 of Radio Waves Act, Clause 3
EAC	Russian Customs Union TR CU 020/2011 EMC Technical Regulation Russian Customs Union TR CU 004/2011 LV Technical Regulation

(1) See the Product Certification link at rok.auto/certifications for Declarations of Conformity, Certificates, and other certification details.

1756-IB16S

ControlLogix DC (18...32V) sinking safety input module.

You must connect a 24V DC SELV/PELV power source to the DC+/- terminals to provide field-side power.

IMPORTANT

- The 24V (DC+ and DC-) power connections are used to supply field-side power to the module.
- All terminals with the same name are connected together on the module. For example, DC+ can be connected to either terminal marked DC +.
- Do not physically connect more than two wires to a single RTB terminal.
- All other I/O modules in the same chassis must use an SELV/PELV power supply.
- The 1756-IB16S module is compatible with a 1756 ControlLogix Chassis, Series C. Do not install the 1756-IB16S module in a 1756 ControlLogix Chassis, Series B.

1756-IB16S Simplified Schematic

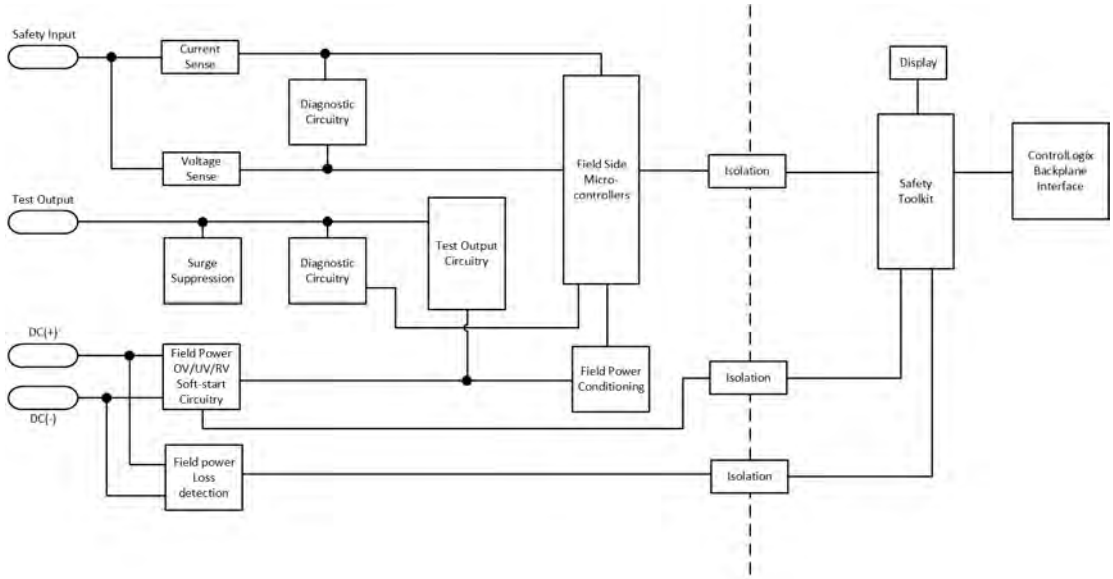

When the module is wired as shown, it is suitable for applications that are rated up to, and including, **Category 2** and **PLd** as defined in ISO 13849-1.

To achieve that suitability rating, you may have to perform diagnostic testing of the safety function. One diagnostic test method is to configure the safety input channel for Safety Pulse Test to test the circuit for short circuits to 24V DC.

Channel Connections
The diagram shows devices that are connected to safety input channel 0 and test output channel 0. You can connect devices to all 16 channels.

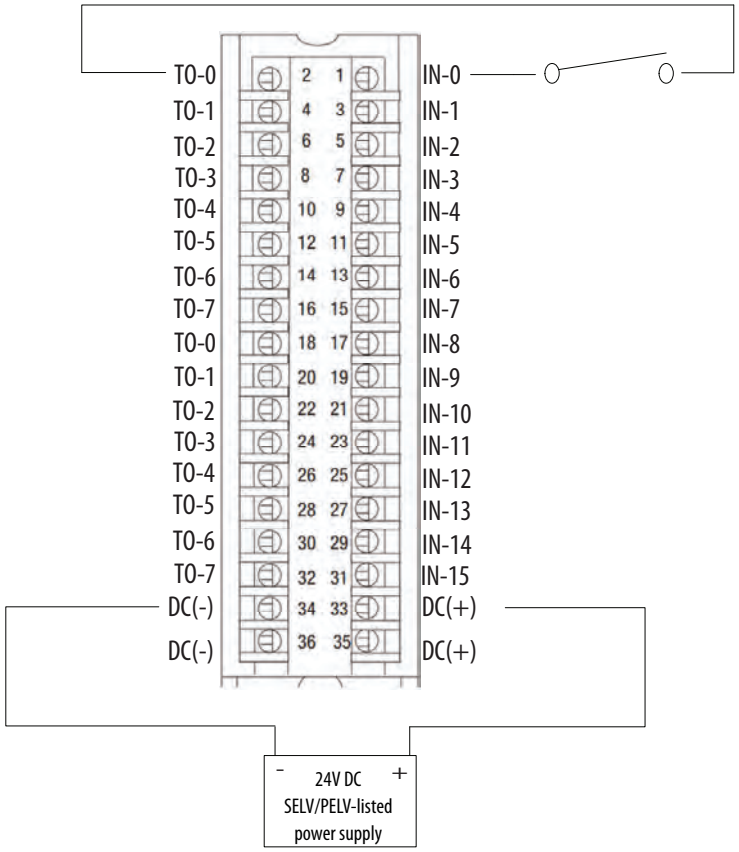

When the module is wired as shown, it is suitable for applications that are rated up to, and including, **Category 3** and **PLd** as defined in ISO 13849-1.

IMPORTANT Switches are suitable for applications that are rated up to, and including SIL 3 CL3, PLd, Cat 3.

Channel Connections

This diagram shows devices that are connected to safety input channels 0 and 1. You can connect devices to all 16 channels.

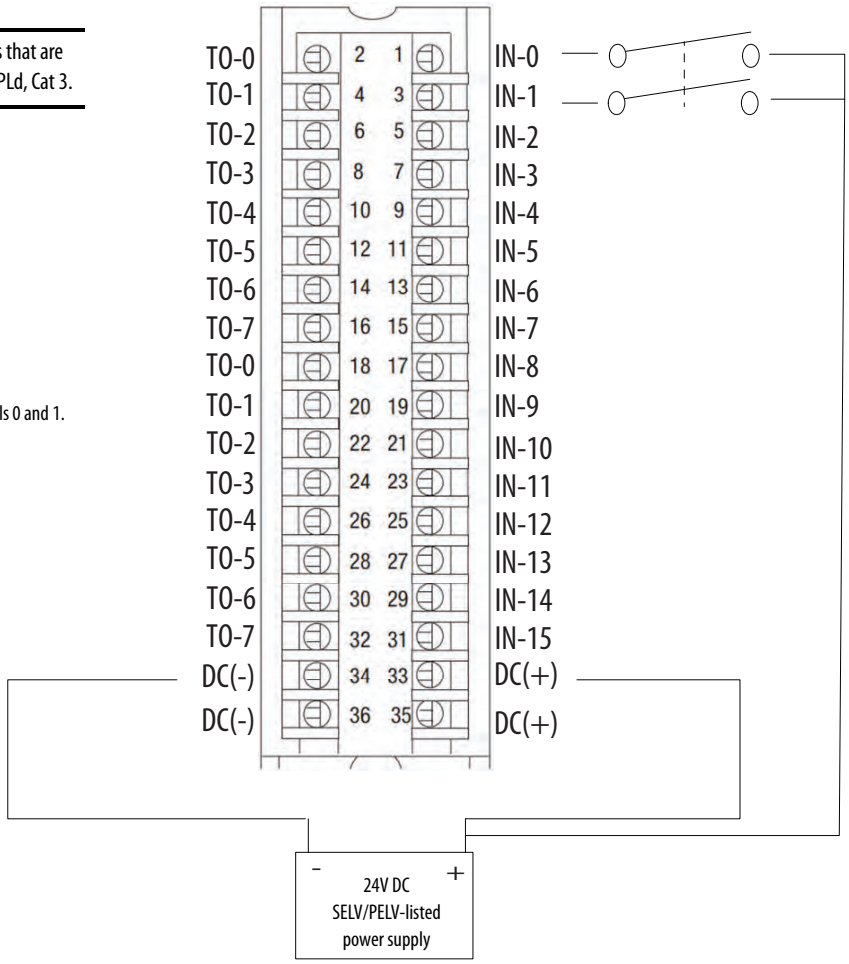

When the module is wired as shown, it is suitable for applications that are rated up to, and including, **Category 4** and **PLe** as defined in ISO 13849-1. To achieve that suitability rating, you may have to perform diagnostic testing of the safety function.

One diagnostic test method is to configure the safety input channel for Safety Pulse Test to test the circuit for short circuits to 24V DC. Safety input pairs must be associated with different Test Output sources.

Channel Connections

This diagram shows devices that are connected to safety input channels 0 and 1; and to test outputs 0 and 1.

You can connect devices to all 16 channels.

Because of the pre-configured relationships between test outputs and input channels, wiring a dual channel device to input channels 0 and 8 is not supported if pulse testing is required, the same holds true for 1/9, 2/10, 3/11, 4/12, 5/13, 6/14, 7/15.

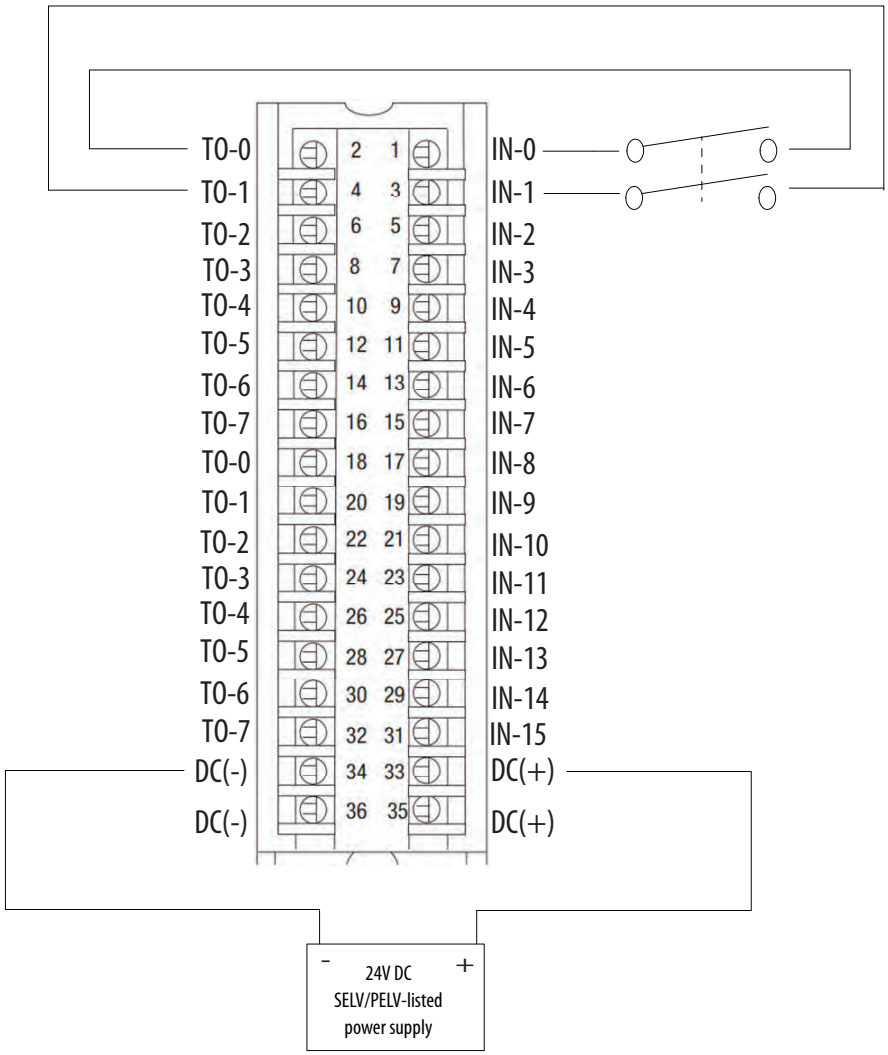

Technical Specifications - 1756-IB16S

Attribute	1756-IB16S
On-state voltage range	10...32V DC
On-state current, @ on-state min voltage	2.4 mA @ 10V
On-state current, @ on-state nom voltage	2.5 mA @ 24V
On-state current, @ on-state max voltage	2.8 mA @ 32V
Off-state voltage, max	5V DC
Off-state current, max	1.5 mA
Input delay time (screw to backplane), max Off to On On to Off	 6 ms @ RPI of 2 ms
Safety Integrity Level	Up to and including Cat. 4 / PL e acc. to EN ISO 13849-1, SIL CL 3 acc. to IEC 62061, SIL 3 acc. to IEC 61508. (1)
Safety Reaction Time (SRT)	6 ms @ RPI of 2ms
Test output current per point	0.2 A
Number of test output	8
Test output pulse width, max	600 µs
Test output pulse period, typical	100 ms
Test output max field capacitance	100 nF
Test output short circuit protection	Yes
Test output leakage current, max	0.5 mA
Module over-temperature detection	Yes
DC supply reverse voltage protection	Yes
DC supply overvoltage protection, max	60V
Input delay time Off to On, user-selectable filter time On to Off, user-selectable filter time	 0...50 ms 0...50 ms
Timestamp of inputs	No
CIP Sync	Yes

(1) Refer to the 1756 ControlLogix Digital Safety I/O Modules User Manual, publication 1756-UM013, for Safety Application Suitability Levels and Safety Data for Safety I/O Modules.

General Specifications - 1756-IB16S

Attribute	1756-IB16S
Inputs	16 channels (1 group of 16), sinking
Current draw @ 5.1V	280 mA
Total backplane power	1.43 W
Field Power voltage range	18…32V DC SELV/PELV
Field Power current, max	1.8 A SELV/PELV
Input Power, voltage range	10…32V
Input Power current, max	2.5 mA SELV/PELV 150VA
Test Output Power, voltage range	18…32V DC
Test Output Power current, max	200 mA
Power dissipation, max	6 W
Thermal dissipation, max	20.47 BTU/hr
Isolation voltage	60V (continuous), basic insulation type, channels-to-backplane No isolation between DC power and channels No isolation between individual ports
Module keying	Electronic, software configurable
Removable terminal block housing	1756-TBCHS 1756-TBS6HS
RTB keying	User-defined mechanical
Wire category(1)	2 - on power ports
Wire size	1756-TBCHS Single wire connection: 0.33…2.1 mm2(22…14 AWG) solid or stranded shielded copper wire rated at 105 °C (221 °F), or greater, 1.2 mm (3/64 in.) insulation max. Double wire connection: 0.33…1.3 mm2(22…16 AWG) solid or stranded copper wire rated at 105 °C (221 °F), or greater, 1.2 mm (3/64 in.) insulation max. Use only the same size wires with no intermixing of solid and stranded wire types. 1756-TBS6HS Single wire connection: 0.33…2.1 mm2(22…14 AWG) solid or stranded shielded copper wire rated at 105 °C (221 °F), or greater, 1.2 mm (3/64 in.) insulation max.
Terminal block torque specs	1756-TBCHS 0.5 N•m (4.4 lb·in)
Enclosure type	None (open-style)
North American temp code	T4A
ATEX/IECEx temp code	T4
IECEx temp code	T4

(1) Use this Conductor Category information for planning conductor routing. See the Industrial Automation Wiring and Grounding Guidelines, publication 1770-4.1.
Use this Conductor Category information for planning conductor routing as described in the appropriate System Level Installation Manual.

Environmental Specifications - 1756-IB16S

Attribute	1756-IB16S
Temperature, operating IEC 60068-2-1 (Test Ad, Operating Cold), IEC 60068-2-2 (Test Bd, Operating Dry Heat), IEC 60068-2-14 (Test Nb, Operating Thermal Shock)	0 °C ≤ Ta ≤ 60 °C (32 °F ≤ Ta ≤ 140 °F)
Temperature, surrounding air, max	60 °C (140 °F)
Temperature, nonoperating IEC 60068-2-1 (Test Ab, Unpackaged Nonoperating Cold), IEC 60068-2-2 (Test Bb, Unpackaged Nonoperating Dry Heat), IEC 60068-2-14 (Test Na, Unpackaged Nonoperating Thermal Shock)	-40…+85 °C (-40…+185 °F)
Relative humidity IEC 60068-2-30 (Test Db, Unpackaged Damp Heat)	5…95% noncondensing
Vibration IEC 60068-2-6 (Test Fc, Operating)	2 g @ 10…500 Hz
Shock, operating IEC 60068-2-27 (Test Ea, Unpackaged Shock)	30 g
Shock, nonoperating IEC 60068-2-27 (Test Ea, Unpackaged Shock)	30 g
Emissions	IEC 61000-6-4
ESD immunity IEC 61000-4-2	6 kV contact discharges 8 kV air discharges
Radiated RF immunity IEC 61000-4-3	10V/m with 1 kHz sine-wave 80% AM from 80…2000 MHz 3V/m with 1 kHz sine-wave 80% AM from 2000…2700 MHz 3V/m with 1 kHz sine-wave 80% AM from 2000…6000 MHz
EFT/B immunity IEC 61000-4-4	±2 kV @ 5 kHz on signal ports
Surge transient immunity IEC 61000-4-5	±1 kV line-line (DM) and ±2 kV line-earth (CM) on signal ports
Conducted RF immunity IEC 61000-4-6	10V rms with 1 kHz sine-wave 80% AM from 150 kHz…80 MHz

Certifications - 1756-IB16S

Certification[1]	1756-IB16S
c-UL-us	UL Listed for Class I, Division 2 Group A,B,C,D Hazardous Locations, certified for U.S. and Canada. See UL File E194810.
CE	European Union 2014/30/EU EMC Directive, compliant with: • EN 61326-1; Meas./Control/Lab., Industrial Requirements • EN 61000-6-2; Industrial Immunity • EN 61000-6-4; Industrial Emissions • EN 61131-2; Programmable Controllers (Clause 8, Zone A & B)
FM	FM Approved Equipment for use in Class I Division 2 Group A,B,C,D Hazardous Locations
RCM	Australian Radiocommunications Act, compliant with: • EN 61000-6-4; Industrial Emissions
Ex	European Union 2014/34/EU ATEX Directive, compliant with: • EN/IEC 60079-0; Explosive Atmospheres, General Requirements • EN 60079-7; Explosive Atmospheres, Equipment protection by increased safety • Ex ec IIC T4 Gc • DEMKO 19 ATEX 2189X
IECEx	IECEx System, compliant with: • IEC 60079-0; Explosive Atmospheres, General Requirements • IEC 60079-7; Explosive Atmospheres, Equipment protection by increased safety • Ex ec IIC T4 Gc • IECEx UL 19.0021X
TÜV	TÜV Certified for Functional Safety;[2] Capable of Cat. 4/PL e according to EN ISO 13849-1 and SIL 3 according to EN 62061/IEC 61508 when used as described in the GuardLogix® 5580 and Compact GuardLogix 5380 Controller Systems Safety Reference Manual, publication 1756-RM012
KC	Korean Registration of Broadcasting and Communications Equipment, compliant with: • Article 58-2 of Radio Waves Act, Clause 3

(1) When marked. See the Product Certification link at http://www.ab.com for Declarations of Conformity, Certificates, and other certification details.

(2) When used with specified firmware revisions.

1756-OBV8S

ControlLogix DC (18...32V) safety bipolar/sourcing output module

You can use the 1756-OBV8S module in Bipolar mode or Sourcing mode.

IMPORTANT

- The 24V (DC+ and DC-) power connections are used to supply field-side power to the module.
- All terminals with the same name are connected together on the module.For example, DC+ can be connected to either terminal marked DC +.
- Do not physically connect more than two wires to one RTB terminal.
- All other I/O modules in the same chassis must use an SELV/PELV power supply.
- The 1756-OBV8S module is compatible with a 1756 ControlLogix Chassis, Series C. Do not install the 1756-OBV8S module in a 1756 ControlLogix Chassis, Series B.
- Due to the higher internal power dissipation of the 1756-OBV8S module, do not install the 1756-OBV8S module next to any controller or communication module.

1756-OBV8S Simplified Schematic

This schematic represents EVEN channels. ODD channels would reverse which micro controller controls P and M.

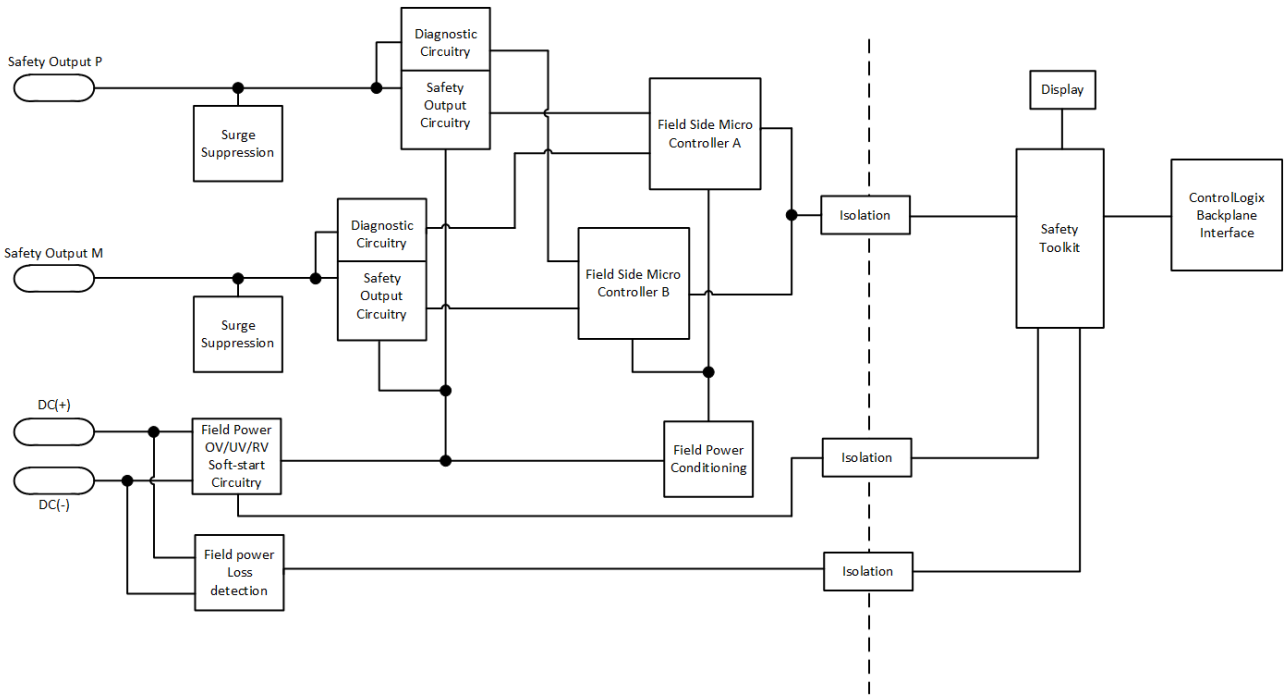

Bipolar Mode

When the module is wired as shown, it is suitable for applications that are rated up to, and including, **Category 2** and **PLd** as defined in ISO 13849-1.

To achieve that suitability rating, you may have to perform diagnostic testing and monitoring of the safety function. One diagnostic test method is to configure the safety output channel for Safety Pulse Test to test the circuit for short circuits to 24V DC.

Channel Connections

This wiring example shows connections to Safety Output 0. You are not limited to using channel 0 in this mode. You can use all channels as determined by your application.

We **strongly recommend** that, if you have a direct connection between the safety output module and an input module and those modules are powered by separate power supplies, you connect module DC- and actuator DC- together. This practice helps to eliminate grounding float from disrupting diagnostics.

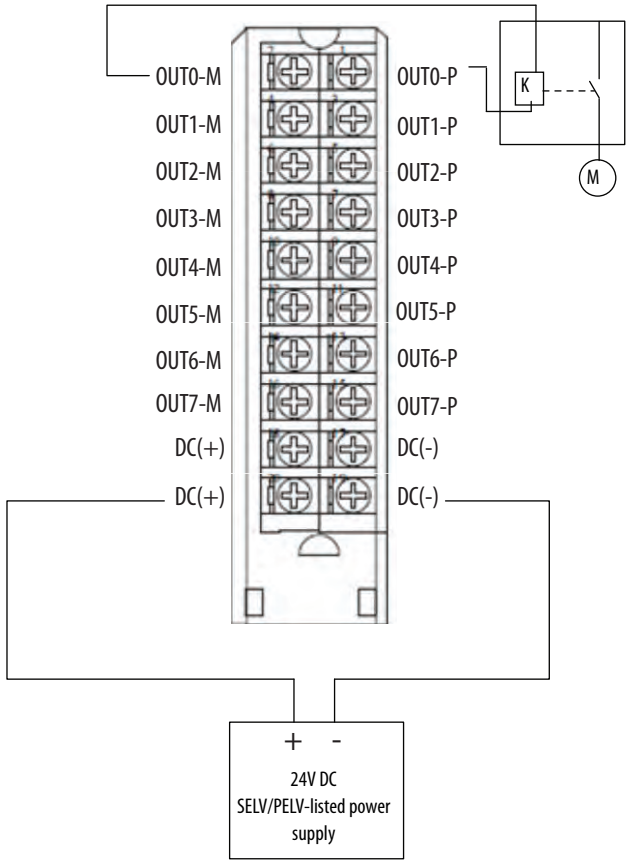

When the module is wired as shown, it is suitable for applications that are rated up to, and including, **Category 4** and **PLe** as defined in ISO 13849-1.

To achieve that suitability rating, you may have to perform diagnostic testing and monitoring of the safety function. One diagnostic test method is to configure the safety output channel for Safety Pulse Test to test the circuit for short circuits to 24V DC.

- The application is configured so that a No Load fault can only be detected if the wires from **both** the P- terminal and the M-terminal are disconnected.

For Cat.4 applications, if your application remains in safe state, that is, the output is off, for a prolonged duration, we recommend that you take one of these actions:

- Apply output monitoring at the actuator. The monitoring can be direct or indirect.
- Limit the safe state to no more than 24 hours.
- Conduct functional test if safe state dwell time increases.

Connection Pairs

The terminals for each channel function as a Bipolar connection pair when you use a 1756-OBV8S module in Bipolar switching mode. For example, the Safety Output 0 P (Sourcing) terminal and Safety Output 0 M (Sinking) terminal are a Bipolar connection pair. That is, they are a P-M pair.

When the module is in Bipolar switching mode, you must connect the device to both terminals.

Channel Connections

This wiring example shows connections to the P-M pair for Safety Output 0. You are not limited to using channel 0 in this mode. You can use all channel pairs as determined by your application.

We **strongly recommend** that, if you have a direct connection between the safety output module and an input module and those modules are powered by separate power supplies, you connect the DC- terminals together. This practice helps to eliminate grounding float from disrupting diagnostics.

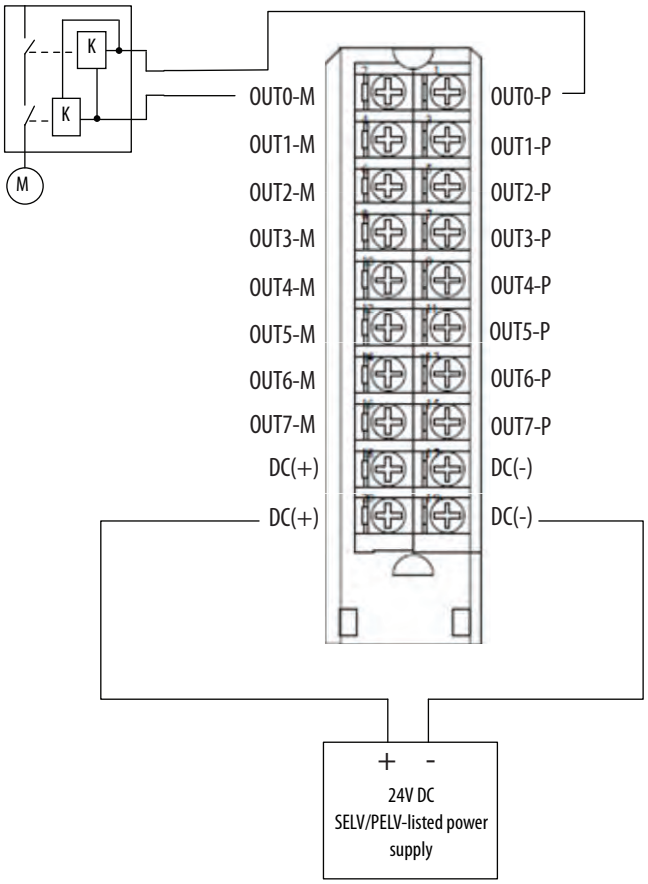

When the module is wired as shown, it is suitable for applications that are rated up to, and including, **Category 4** and **PLe** as defined in ISO 13849-1.

To achieve that suitability rating, you may have to perform diagnostic testing and monitoring of the safety function. One diagnostic test method is to configure the safety output channel for Safety Pulse Test to test the circuit for short circuits to 24V DC.

- We **strongly recommend** that you connect separate shielded cables to the P terminal and the M terminal to reduce possibility of a short between these terminals. If a short is detected across the P-M pair, the module outputs are turned off, but the actuator that is connected to the output pair remains on.
- No Load and Overload conditions are only detectable at the P terminal.

For Cat.4 applications, if your application remains in safe state, that is, the output is off, for a prolonged duration, we recommend that you take one of these actions:

- Apply output monitoring at the actuator. The monitoring can be direct or indirect.
- Limit the safe state to no more than 24 hours.
- Conduct functional test if safe state dwell time increases.

Actuator DC Power

In this wiring configuration, you must connect the **DC+ terminal to an SELV/PELV-listed** power supply.

The DC+ and DC- on the actuator must be connected to the same power supply as the DC+ and DC- on the module.

Connection Pairs

The terminals for each channel function as a Bipolar connection pair when you use a 1756-OBV8S module in Bipolar switching mode. For example, the Safety Output 0 P (Sourcing) terminal and Safety Output 0 M (Sinking) terminal are a Bipolar connection pair. That is, they are a P-M pair.

When the module is in Bipolar switching mode, you must connect the device to both terminals.

Channel Connections

This wiring example shows connections to the P-M pair for Safety Output 0. You are not limited to using channel 0 in this mode. You can use all channel pairs as determined by your application.

We **strongly recommend** that, if you have a direct connection between the safety output module and an input module and those modules are powered by separate power supplies, you connect the DC- terminals together. This practice helps to eliminate grounding float from disrupting diagnostics.

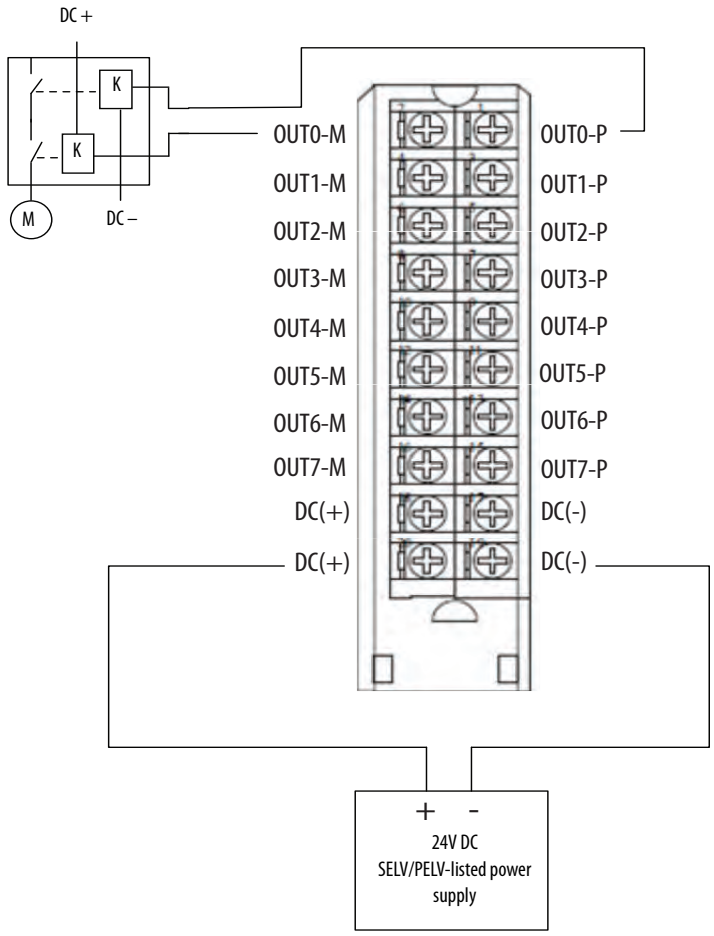

Sourcing Mode

When the module is wired as shown, it is suitable for applications that are rated up to, and including, **Category 2** and **PLd** as defined in ISO 13849-1.

To achieve that suitability rating, you may have to perform diagnostic testing and monitoring of the safety function. One diagnostic test method is to configure the safety output channel for Safety Pulse Test to test the circuit for short circuits to 24V DC.

Channel Connections

This wiring example shows connections to Safety Output 0. You are not limited to using channel 0 in this mode. You can use all channels as determined by your application.

We **strongly recommend** that, if you have a direct connection between the safety output module and an input module and those modules are powered by separate power supplies, you connect module DC- and actuator DC- together. This practice helps to eliminate grounding float from disrupting diagnostics.

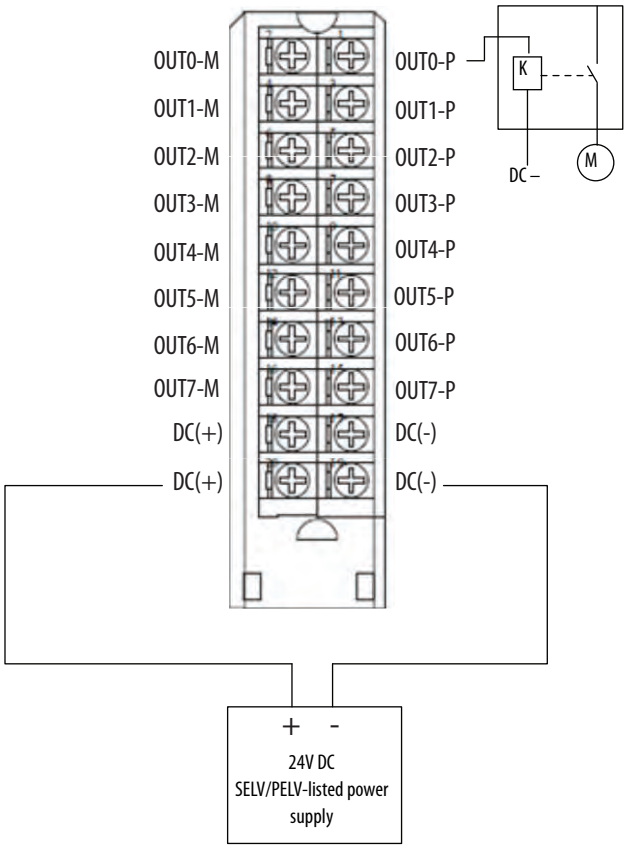

When the module is wired as shown, it is suitable for applications that are rated up to, and including, **Category 4** and **PLe** as defined in ISO 13849-1.

To achieve that suitability rating, you may have to perform diagnostic testing and monitoring of the safety function. One diagnostic test method is to configure the safety output channel for Safety Pulse Test to test the circuit for short circuits to 24V DC.

For Cat.4 applications, if your application remains in safe state, that is, the output is off, for a prolonged duration, we recommend that you take one of these actions:

- Apply output monitoring at the actuator. The monitoring can be direct or indirect.
- Limit the safe state to no more than 24 hours.
- Conduct functional test if safe state dwell time increases.

Connection Pairs

When you use dual-channel sourcing wiring on the 1756-OBV8S module, you must connect the devices to dual-channel connection pairs. For example, the devices are connected to channels 4 and 5 because they are a connection pair. These channels are dual-channel connection pairs:

- Channels 0 and 1 (shown)
- Channels 2 and 3
- Channels 4 and 5
- Channels 6 and 7

Channel Connections

This wiring example shows connections to Safety Output 0 P and Safety Output 1P. You are not limited to using channels 0 and 1 in this mode. You can use all channel pairs as determined by your application.

We **strongly recommend** that, if you have a direct connection between the safety output module and an input module and those modules are powered by separate power supplies, you connect module DC- and actuator DC- together. This practice helps to eliminate grounding float from disrupting diagnostics.

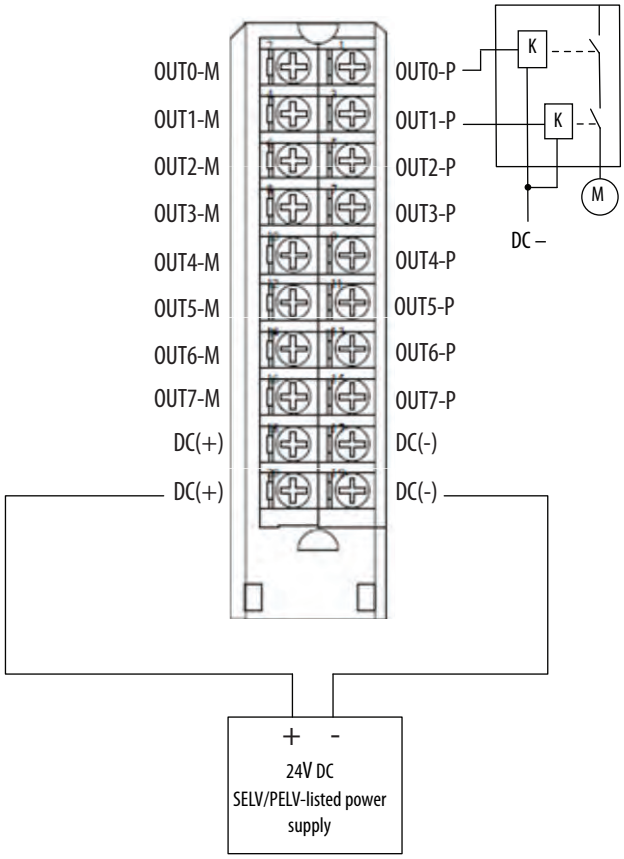

Technical Specifications - 1756-OBV8S

Attribute	1756-OBV8S
On-state voltage, min(1)	17.5V DC
On-state voltage, nom(1)	24V DC
On-state voltage, max(1)	32V DC
On-state voltage drop, max(1)	0.5V DC
On-state current per channel, max(1)	1 A
Off-state voltage, max(1)	0.5V DC
Off-state leakage current per point, max(2)	1.5 mA
Output current rating per channel	1 A
Surge current per point, max	1.5 A
Output delay time (backplane to screw)	
Off to On	4 ms, max
On to Off	4 ms, max
Safety Integrity Level	Up to and including Cat. 4 / PL e acc. to EN ISO 13849-1, SIL CL 3 acc. to IEC 62061, SIL 3 acc. to IEC 61508.(3)
Safety reaction time (SRT)	4.5 ms
Pulse width, max	750 µs
Field power loss detection	Yes (per point)
No load detection diagnostics	Yes (per point)
Output short circuit/overload detection	Yes (per point)
Output short circuit/overload protection	Yes (per point)
Output overtemperature detection	Yes (per point)
Output overtemperature protection	Yes (per point)
Reverse voltage protection	Yes
Overvoltage protection, max	Yes
CIP Sync	Yes
Output control in fault mode per point	Yes
Output states in program mode per point	Off (default), Hold
Output states in fault mode per point	Off (default), Hold

(1) Field Power related attributes.

(2) Recommended Loading Resistor - To limit the effects of leakage current through solid-state outputs, you can connect a loading resistor in parallel with your load. For 24V DC operation, use a 5.6 KΩ, 0.5 W resistor for transistor operation.

(3) Refer to the 1756 ControlLogix Digital Safety I/O Modules User Manual, publication 1756-UM013, for Safety Application Suitability Levels and Safety Data for Safety I/O Modules.

General Specifications - 1756-OBV8S

Attribute	1756-OBV8S
Outputs	8
Voltage category	24V DC
Current draw @ 5.1V	280 mA
Total backplane power	1.43 W
Field Power voltage range	18…32V DC SELV/PELV
Field Power current, max	8.1 A SELV/PELV
Output Power voltage range	18…32V
Output Power current, max	1 A SELV/PELV 150VA
Field Power	1 A per channel @ 18…32V DC 8.1 A per module @ 18…32V DC
Pilot Duty	2.4 A inrush
Power dissipation, max	8 W
Thermal dissipation, max	27.28 BTU/hr
Isolation voltage	60V (continuous), basic insulation type, channels-to-backplane No isolation between DC power and channels No isolation between individual ports
Module keying	Electronic keying via programming software
Removable terminal block housing	1756-TBNHS 1756-TBSHS
RTB keying	User-defined mechanical
Wire category(1)	2 - power ports
Wire size	1756-TBNHS Single wire connection: 0.33…2.1 mm2(22…14 AWG) solid or stranded shielded copper wire rated at 105 °C (221 °F), or greater, 1.2 mm (3/64 in.) insulation max. Double wire connection: 0.33…1.3 mm2(22…16 AWG) solid or stranded copper wire rated at 105 °C (221 °F), or greater, 1.2 mm (3/64 in.) insulation max. Use only the same size wires with no intermixing of solid and stranded wire types. 1756-TBSHS Single wire connection: 0.33…2.1 mm2(22…14 AWG) solid or stranded shielded copper wire rated at 105 °C (221 °F), or greater, 1.2 mm (3/64 in.) insulation max.
Terminal block torque specs	1756-TBNHS 1.36 N•m (12 lb·in)
Enclosure type rating	None (open-style)
North American temp code	T4A
ATEX temp code	T4
IECEx temp code	T4

(1) Use this Conductor Category information for planning conductor routing. See the Industrial Automation Wiring and Grounding Guidelines, publication 1770-4.1.

Environmental Specifications - 1756-OBV8S

Attribute	1756-OBV8S
Temperature, operating IEC 60068-2-1 (Test Ab, Operating Cold), IEC 60068-2-2 (TestBb, Unpackaged Nonoperating Dry Heat), IEC 60068-2-14 (Test Na, Operating Thermal Shock)	0 °C < Ta < +60 °C (+32 °F < Ta < +140 °F)
Temperature, nonoperating IEC 60068-2-1 (Test Ab, Unpackaged Nonoperating Cold), IEC 60068-2-2 (Test Bb, Unpackaged Nonoperating Dry Heat), IEC 60068-2-14 (Test Na, Unpackaged Nonoperating Thermal Shock)	-40…+85 °C (-40…+185 °F)
Temperature, surrounding air, max	60 °C (140 °F)
Relative humidity IEC 60068-2-30 (Test Db, Unpackaged Damp Heat)	5…95% noncondensing
Vibration IEC 60068-2-6 (Test Fc, Operating)	2 g @ 10…500 Hz
Shock, operating IEC 60068-2-27 (Test Ea, Unpackaged Shock)	30 g
Shock, nonoperating IEC 60068-2-27 (Test Ea, Unpackaged Shock)	30 g
Emissions	IEC 61000-6-4
ESD immunity IEC 61000-4-2	6 kV contact discharges 8 kV air discharges
Radiated RF immunity IEC 61000-4-3	10V/m with 1 kHz sine-wave 80% AM from 80…2000 MHz 3V/m with 1 kHz sine-wave 80% AM from 2000…2700 MHz 3V/m with 1 kHz sine-wave 80% AM from 2700…6000 MHz
EFT/B immunity IEC 61000-4-4	±2 kV @ 5 kHz on signal ports
Surge transient immunity IEC 61000-4-5	±1 kV line-line (DM) and ±2 kV line-earth (CM) on signal ports
Conducted RF immunity IEC 61000-4-6	10V rms with 1 kHz sine-wave 80% AM from 150 kHz…80 MHz

Certifications - 1756-OBV8S

Certification[1]	1756-OBV8S
c-UL-us	UL Listed for Class I, Division 2 Group A,B,C,D Hazardous Locations, certified for U.S. and Canada. See UL File E194810.
FM	FM Approved Equipment for use in Class I Division 2 Group A,B,C,D Hazardous Locations
CE	European Union 2014/30/EU EMC Directive, compliant with: • EN 61326-1; Meas./Control/Lab., Industrial Requirements • EN 61000-6-2; Industrial Immunity • EN 61000-6-4; Industrial Emissions • EN 61131-2; Programmable Controllers (Clause 8, Zone A & B)
RCM	Australian Radiocommunications Act, compliant with: • EN 61000-6-4; Industrial Emissions
Ex	European Union 2014/34/EU ATEX Directive, compliant with: • EN/IEC 60079-0; Explosive Atmospheres, General Requirements • EN 60079-7; Explosive Atmospheres, Equipment protection by increased safety • Ex ec IIC T4 Gc • DEMKO 19 ATEX 2189X
IECEx	IECEx System, compliant with: • IEC 60079-0; Explosive Atmospheres, General Requirements • IEC 60079-7; Explosive Atmospheres, Equipment protection by increased safety • Ex ec IIC T4 Gc • IECEx UL 19.0021X
TÜV	TÜV Certified for Functional Safety;[2] Capable of Cat. 4/PL e according to EN ISO 13849-1 and SIL 3 according to EN 62061/IEC 61508 when used as described in the GuardLogix 5580 and Compact GuardLogix 5380 Controller Systems Safety Reference Manual, publication 1756-RM012
KC	Korean Registration of Broadcasting and Communications Equipment, compliant with: • Article 58-2 of Radio Waves Act, Clause 3

(1) When marked. See the Product Certification link at http://www.ab.com for Declarations of Conformity, Certificates, and other certification details.
(2) When used with specified firmware revisions.

1756-0W16I

ControlLogix AC (10...240V) DC (5...125V) isolated contact module

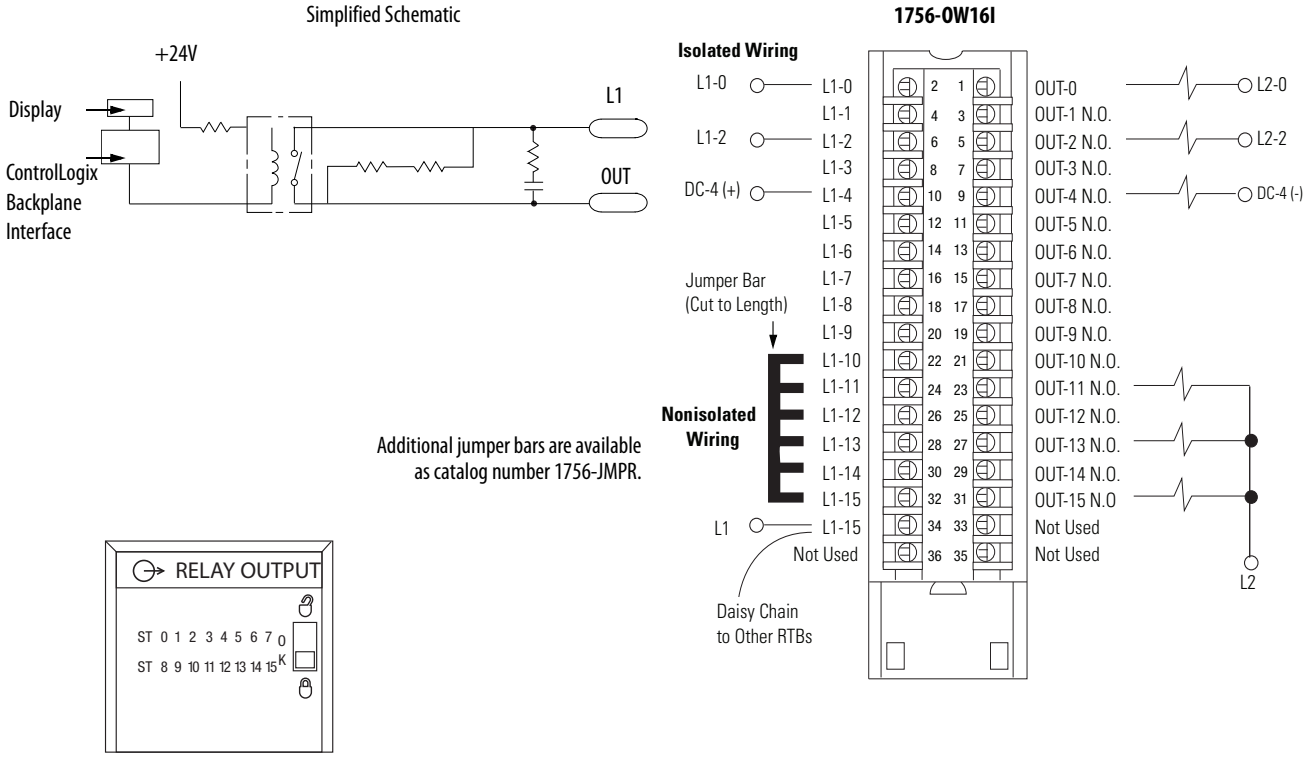

Technical Specifications - 1756-0W16I

Attribute	1756-0W16I
Outputs	16 N.O. individually isolated
Pilot duty	C300/R150
Operating voltage range	5…125V DC 10…240V AC
Output voltage range (load dependent)	1 A @ 5…30V DC 0.5 A @ 48V DC 0.22 A @ 125V DC 1.5 A @ 120V AC 50/60 Hz 0.75 A @ 240V AC 50/60 Hz
Output delay time Off to On On to Off	 10 ms max 10 ms max
Current draw @ 5.1V	150 mA
Current draw @ 24V	150 mA
Total backplane power	4.4 W
Power dissipation, max	4.5 W @ 60 °C (140 °F)
Thermal dissipation	15.35 BTU/hr
Off-state leakage current per point, max	1.5 mA per point
Minimum load current	10 mA per point
Initial contact resistance, max	100 mΩ @ 6V 1 A

Technical Specifications - 1756-OW16I (continued)

Attribute	1756-OW16I
Switching frequency, max	1 operation/3 s (0.3 Hz at rated load)
Bounce time, mean	1.2 ms
Expected contact life	300 kHz resistive 100 kHz inductive
Scheduled outputs	Synchronization within 16.7 s max, reference to the Coordinated System Time
States in Fault mode per point	Hold last state, On or Off (Off is default)
States in Program mode per point	Hold last state, On or Off (Off is default)
Isolation voltage	250V (continuous), basic insulation type, outputs-to-backplane, and output-to-output
Module keying	Electronic, software configurable
Fusing	Not protected. A fused IFM can be used to help protect outputs. See publication 1492-TD008. However, the ControlLogix system has been agency certified using only the ControlLogix RTBs, that is, 1756-TBCH, 1756-TBNH, 1756-TBSH, and 1756-TBS6H. Any application that requires agency certification of the ControlLogix system using other wiring termination methods can require application-specific approval by the certifying agency.
Removable terminal block	1756-TBCH 1756-TBS6H
RTB keying	User-defined mechanical
Slot width	1
Wire category	1(1)
Enclosure type	None (open-style)
North American temperature code	T4A

(1) Use this conductor category information for planning conductor routing as described in the system-level installation manual. See the Industrial Automation Wiring and Grounding Guidelines, publication 1770-4.1.

Environmental Specifications - 1756-OW16I

Attribute	1756-OW16I
Temperature, operating IEC 60068-2-1 (Test Ad, Operating Cold), IEC 60068-2-2 (Test Bd, Operating Dry Heat), IEC 60068-2-14 (Test Nb, Operating Thermal Shock)	0…60 °C (32…140 °F)
Temperature, surrounding air, max	60 °C (140 °F)
Temperature, nonoperating IEC 60068-2-1 (Test Ab, Unpackaged Nonoperating Cold), IEC 60068-2-2 (Test Bb, Unpackaged Nonoperating Dry Heat), IEC 60068-2-14 (Test Na, Unpackaged Nonoperating Thermal Shock)	-40…+85 °C (-40…+185 °F)
Relative humidity IEC 60068-2-30 (Test dB, Unpackaged Damp Heat)	5…95% noncondensing
Vibration IEC 60068-2-6 (Test Fc, Operating)	2 g @ 10…500 Hz
Shock, operating IEC 60068-2-27 (Test Ea, Unpackaged Shock)	30 g
Shock, nonoperating IEC 60068-2-27 (Test Ea, Unpackaged Shock)	50 g
Emissions	IEC 61000-6-4
ESD immunity IEC 61000-4-2	6 kV contact discharges 8 kV air discharges

Environmental Specifications - 1756-0W16I (continued)

Attribute	1756-0W16I
Radiated RF immunity IEC 61000-4-3	10V/m with 1 kHz sine-wave 80% AM from 80…2000 MHz 10V/m with 200 Hz 50% Pulse 100% AM @ 900 MHz 10V/m with 200 Hz 50% Pulse 100% AM @ 1890 MHz 3V/m with 1 kHz sine-wave 80% AM from 2000…2700 MHz
EFT/B immunity IEC 61000-4-4	±4 kV at 5 kHz on signal ports
Surge transient immunity IEC 61000-4-5	±1 kV line-line (DM) and ±2 kV line-earth (CM) on signal ports
Conducted RF immunity IEC 61000-4-6	10V rms with 1 kHz sine-wave 80% AM from 150 kHz…80 MHz
Oscillatory surge withstand IEEE C37.90.1	3 kV

Certifications - 1756-0W16I

Certification (when product is marked)[1]	1756-0W16I
UL	UL Listed Industrial Control Equipment. See UL File E65584.
CSA	CSA Certified Process Control Equipment. See CSA File LR54689C. CSA Certified Process Control Equipment for Class I, Division 2 Group A,B,C,D Hazardous Locations. See CSA File LR69960C.
CE	European Union 2014/30/EU EMC Directive, compliant with: • EN 61326-1; Meas./Control/Lab., Industrial Requirements • EN 61000-6-2; Industrial Immunity • EN 61000-6-4; Industrial Emissions • EN 61131-2; Programmable Controllers (Clause 8, Zone A & B) European Union 2014/35/EU LVD, compliant with: EN 61131-2; Programmable Controllers (Clause 11)
RCM	Australian Radiocommunications Act, compliant with: EN 61000-6-4; Industrial Emissions
FM	FM Approved Equipment for use in Class I Division 2 Group A,B,C,D Hazardous Locations
KC	Korean Registration of Broadcasting and Communications Equipment, compliant with: Article 58-2 of Radio Waves Act, Clause 3
EAC	Russian Customs Union TR CU 020/2011 EMC Technical Regulation Russian Customs Union TR CU 004/2011 LV Technical Regulation

(1) See the Product Certification link at rok.auto/certifications for Declarations of Conformity, Certificates, and other certification details.

1756-0X8I

ControlLogix AC (10...240V) DC (5...125V) isolated contact module

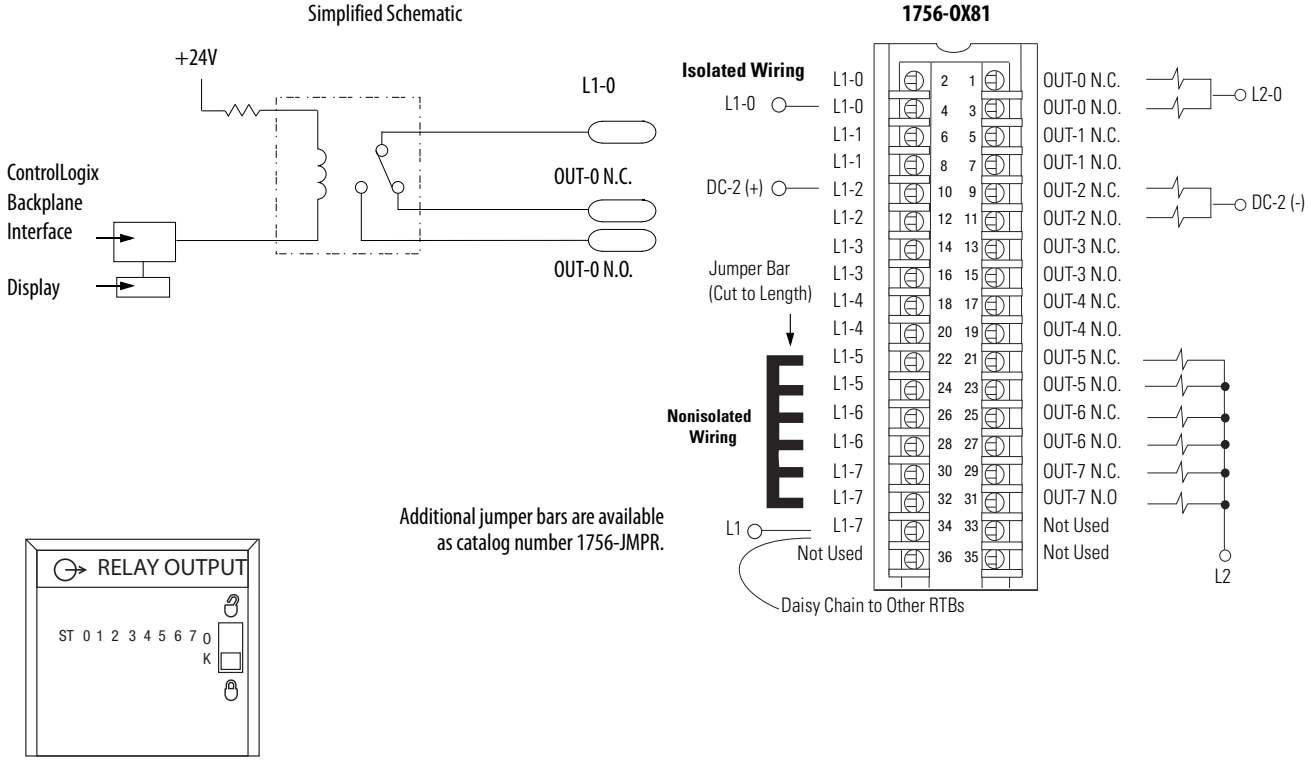

Technical Specifications - 1756-0X8I

Attribute	1756-0X8I
Outputs	8 N.O. 8 N.C. individually isolated (two points per group)
Pilot duty	C300/R150
Operating voltage range	5…125V DC 10…240V AC
Contact current rating	1 A @ 5…30V DC 0.5 A @ 48V DC 0.22 A @ 125V DC 1.5 A @ 120V AC 50/60 Hz 0.75 A @ 240VAC 50/60 Hz
Output delay time Off to On On to Off	 13 ms max 13 ms max
Current draw @ 5.1V	100 mA
Current draw @ 24V	100 mA
Total backplane power	2.9 W
Power dissipation, max	3.1 W @ 60 °C (140 °F)
Thermal dissipation	10.57 BTU/hr
Off-state leakage current per point, max	0 mA
Minimum load current	10 mA per point

Technical Specifications - 1756-0X8I (continued)

Attribute	1756-0X8I
Initial contact resistance, max	100 mΩ @ 6V 1 A
Switching frequency, max	1 operation/3 s (0.3 Hz at rated load)
Bounce time, mean	1.2 ms
Expected contact life	300 kHz resistive 100 kHz inductive
Scheduled outputs	Synchronization within 16.7 s max, reference to the Coordinated System Time
States in Fault mode per point	Hold last state, On or Off (Off is default)
States in Program mode per point	Hold last state, On or Off (Off is default)
Isolation voltage	250V (continuous), basic insulation type, outputs-to-backplane, and output-to-output
Module keying	Electronic, software configurable
Fusing	Not protected. A fused IFM is recommended to help protect outputs.
Removable terminal block	1756-TBCH 1756-TBS6H
RTB keying	User-defined mechanical
Slot width	1
Wire category	1(1)
Enclosure type	None (open-style)
North American temperature code	T4A

(1) Use this conductor category information for planning conductor routing as described in the system-level installation manual. See the Industrial Automation Wiring and Grounding Guidelines, publication 1770-4.1.

Environmental Specifications - 1756-0X8I

Attribute	1756-0X8I
Temperature, operating IEC 60068-2-1 (Test Ad, Operating Cold), IEC 60068-2-2 (Test Bd, Operating Dry Heat), IEC 60068-2-14 (Test Nb, Operating Thermal Shock)	0…60 °C (32…140 °F)
Temperature, surrounding air, max	60 °C (140 °F)
Temperature, nonoperating IEC 60068-2-1 (Test Ab, Unpackaged Nonoperating Cold), IEC 60068-2-2 (Test Bb, Unpackaged Nonoperating Dry Heat), IEC 60068-2-14 (Test Na, Unpackaged Nonoperating Thermal Shock)	-40…+85 °C (-40…+185 °F)
Relative humidity IEC 60068-2-30 (Test dB, Unpackaged Damp Heat)	5…95% noncondensing
Vibration IEC 60068-2-6 (Test Fc, Operating)	2 g @ 10…500 Hz
Shock, operating IEC 60068-2-27 (Test Ea, Unpackaged Shock)	30 g
Shock, nonoperating IEC 60068-2-27 (Test Ea, Unpackaged Shock)	50 g
Emissions	IEC 61000-6-4
ESD immunity IEC 61000-4-2	6 kV contact discharges 8 kV air discharges

Environmental Specifications - 1756-0X8I (continued)

Attribute	1756-0X8I
Radiated RF immunity IEC 61000-4-3	10V/m with 1 kHz sine-wave 80% AM from 80…2000 MHz 10V/m with 200 Hz 50% Pulse 100% AM @ 900 MHz 10V/m with 200 Hz 50% Pulse 100% AM @ 1890 MHz 3V/m with 1 kHz sine-wave 80% AM from 2000…2700 MHz
EFT/B immunity IEC 61000-4-4	±4 kV at 5 kHz on signal ports
Surge transient immunity IEC 61000-4-5	±1 kV line-line (DM) and ±2 kV line-earth (CM) on signal ports
Conducted RF immunity IEC 61000-4-6	10V rms with 1 kHz sine-wave 80% AM from 150 kHz…80 MHz
Oscillatory surge withstand IEEE C37.90.1	3 kV

Certifications - 1756-0X8I

Certification (when product is marked)[1]	1756-0X8I
UL	UL Listed Industrial Control Equipment. See UL File E65584.
CSA	CSA Certified Process Control Equipment. See CSA File LR54689C. CSA Certified Process Control Equipment for Class I, Division 2 Group A,B,C,D Hazardous Locations. See CSA File LR69960C.
CE	European Union 2014/30/EU EMC Directive, compliant with: • EN 61326-1; Meas./Control/Lab., Industrial Requirements • EN 61000-6-2; Industrial Immunity • EN 61000-6-4; Industrial Emissions • EN 61131-2; Programmable Controllers (Clause 8, Zone A & B) European Union 2014/35/EU LVD, compliant with: EN 61131-2; Programmable Controllers (Clause 11)
RCM	Australian Radiocommunications Act, compliant with: EN 61000-6-4; Industrial Emissions
FM	FM Approved Equipment for use in Class I Division 2 Group A,B,C,D Hazardous Locations
KC	Korean Registration of Broadcasting and Communications Equipment, compliant with: Article 58-2 of Radio Waves Act, Clause 3
EAC	Russian Customs Union TR CU 020/2011 EMC Technical Regulation Russian Customs Union TR CU 004/2011 LV Technical Regulation

(1) See the Product Certification link at rok.auto/certifications for Declarations of Conformity, Certificates, and other certification details.

1756-CFM

ControlLogix configurable flowmeter module

1756-CFM Standard Magnetic Pickup

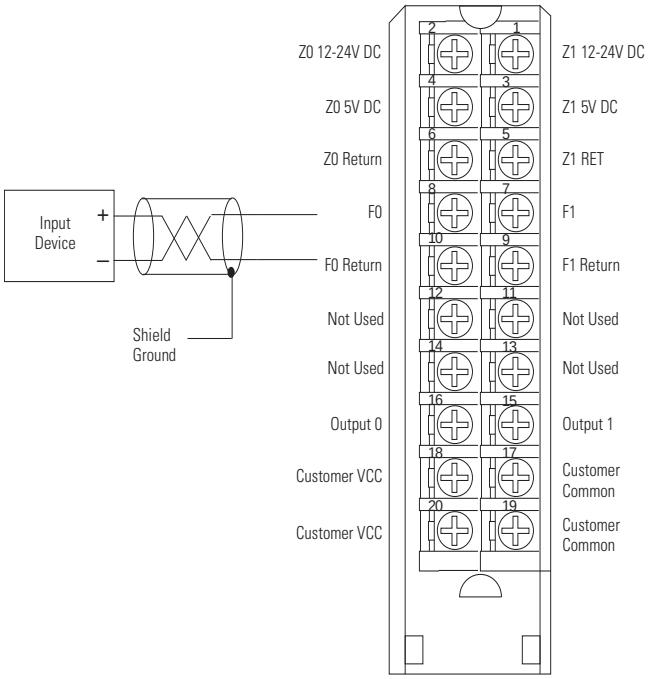

1756-CFM Standard Output

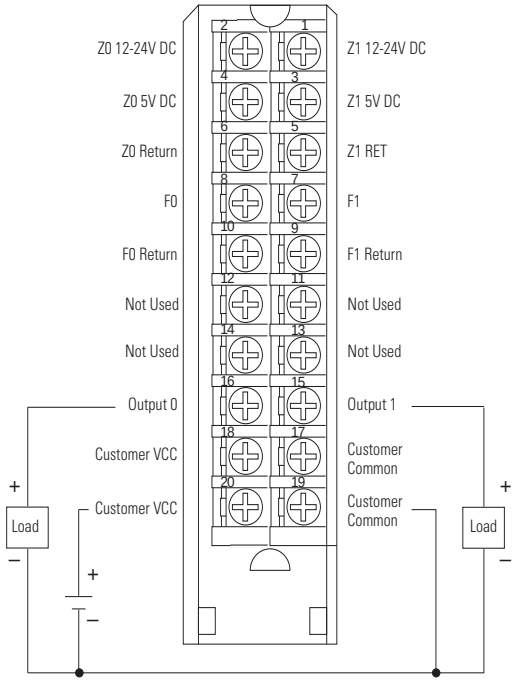

This wiring diagram can be used in applications with 50 mV (magnetic pickup), 1.3V (TTL), or 4V (preamp level) thresholds. You must use the Studio 5000 Logix Designer® application to choose the appropriate threshold level for your specific application.

The 1756-CFM module provides Totalizer mode for metering applications, or high-speed frequency measurements for speed or rate control applications, on two channels connected to flowmeters.

1756-CFM Standard Prover/Store Count

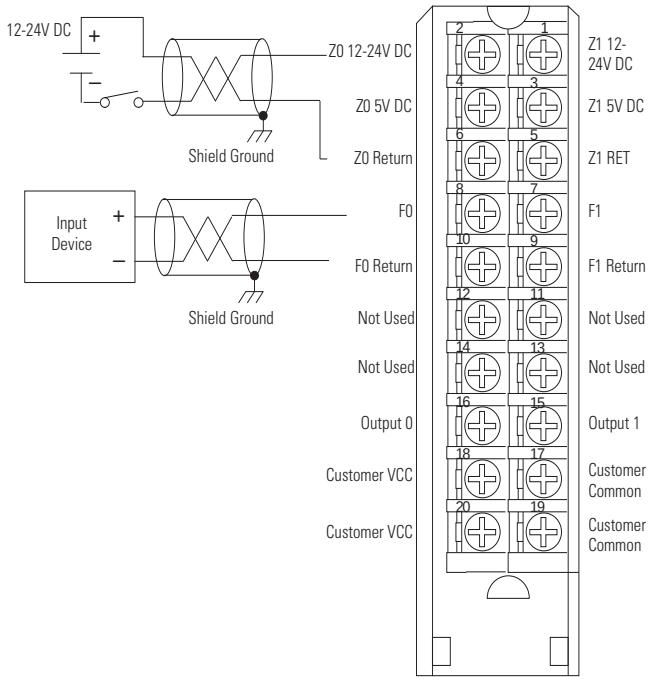

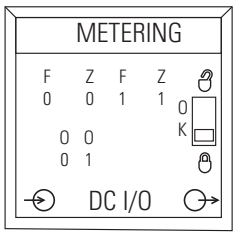

- Detectors 1 and 2 must be wired in parallel.
- Customer VCC can be used to power detectors. In this case, though, the maximum current on the wiring arm must be less than 4 A.
- This wiring example shows a 12-24V DC standard prover that is connected to the module. If you use a 5V DC standard prover, make sure that the positive wire is connected to the 5V terminal (such as Z0 5V DC).

Technical Specifications - 1756-CFM

Attribute	1756-CFM
Inputs	4 (2 per channel)
Inputs per channel	Two flowmeters (F) inputs used for all modes Two gate inputs used in Totalizer mode for prover/store count
Outputs	2 current sourcing
Current draw at 5.1V	300 mA
Current draw at 24V	16 mA
Total backplane power	1.7 W
Power dissipation, max	6 W @ 60 °C (140 °F)
Thermal dissipation	20.4 BTU/hr
Isolation voltage	250V (continuous), reinforced insulation type, I/O-to-backplane 250V (continuous), basic insulation type, I/O group-to-group
Module keying	Electronic, software configurable
Removable terminal block	1756-TBNH 1756-TBSH
RTB keying	User-defined mechanical
Slot width	1

Technical Specifications - 1756-CFM (continued)

Attribute	1756-CFM
Wire category	2 on signal ports 1 on power ports(1)
Enclosure type	None (open-style)
North American temperature code	T4
Totalizer fill and prover	Yes
High resolution, max	100 kHz
Frequency	0.0005 Hz resolution
Reverse polarity protection	Outputs only

(1) Use this conductor category information for planning conductor routing as described in the system-level installation manual. See the Industrial Automation Wiring and Grounding Guidelines, publication 1770-4.1.

Input Specifications - 1756-CFM

Attributes	1756-CFM
Inputs	4 (2 per channel)
Inputs per channel	Two flowmeters (F) inputs used for all modes Two gate inputs used in Totalizer mode for prover/store count
Count range, max	2, 147, 483, 647
Input frequency, max	100 kHz @ flowmeter inputs (overrange occurs at 100 kHz)
Flowmeter input voltage	±30V, selectable input thresholds of 50 mV, 1.3V, and 4V: • ±30V peak unterminated open circuit voltage, magnetic pickup • TTL compatible, input voltage >1.3V DC is Logic 1 and -0.7…1.3V DC is Logic 0 • 12…24V DC powered preamp output, 4V DC threshold
Flowmeter input impedance	5 kΩ ±30% resistive
Filtering (inputs F0 & F1)	Firmware selectable: High-speed 100 kHz or low-pass filter for frequencies < 70 Hz
Gate input voltage range	5V operation: 4.5…5.5V DC 12/24V operation: 10…26.4V DC
Gate input on-state current, min	4 mA
Gate input on-state current, nom	15 mA
Mechanical filter debouncing (Z0 & Z1 Inputs)	Software selectable
Input sampling period	User selectable

Output Specifications - 1756-CFM

Attribute	1756-CFM
Outputs	2 current sourcing
Output voltage source	Customer supplied
Output voltage range, nom(1)	5V operation: 4.5…5.5V DC for 3…20 mA load per point 12/24V operation: 10…31.2V DC for 40 mA…1 A load per point
Output type	IEC 1 A 24V DC
Output Current per point(1)	1 A @ 10…31.2V DC 20 mA @ 4.5…5.5V DC(2)
Surge current	2 A for 50 ms, repeatable every 2 s
Off-state leakage current, max	< 300 µA @ 31.2V DC
On-state voltage drop, max	0.6 Ω x current

Output Specifications - 1756-CFM (continued)

Attribute	1756-CFM
Output control	Any number of outputs is assignable to any of two flowmeter channels Each output can have 2 "turn-on" and "turn-off" preset values
Output switching time	< 50 µs turn on, <300 µs turn off Outputs triggered by Total; all other "turn-on" and "turn-off" times <1 ms
Overload current	Electronic (< 4 A)
Output short circuit protection	Electronic (No indication of fault. Remove overload and toggle output on/off to restore.)
Output reverse polarity protection	Yes (If wired incorrectly, module outputs can be permanently disabled.)

(1) UL rating for 24V DC, 24VA.

(2) All outputs can be on simultaneously without derating.

Environmental Specifications - 1756-CFM

Attribute	1756-CFM
Temperature, operating IEC 60068-2-1 (Test Ad, Operating Cold), IEC 60068-2-2 (Test Bd, Operating Dry Heat), IEC 60068-2-14 (Test Nb, Operating Thermal Shock)	0…60 °C (32…140 °F)
Temperature, surrounding air, max	60 °C (140 °F)
Temperature, nonoperating IEC 60068-2-1 (Test Ab, Unpackaged Nonoperating Cold), IEC 60068-2-2 (Test Bb, Unpackaged Nonoperating Dry Heat), IEC 60068-2-14 (Test Na, Unpackaged Nonoperating Thermal Shock)	-40…+85 °C (-40…+185 °F)
Relative humidity IEC 60068-2-30 (Test dB, Unpackaged Damp Heat)	5…95% noncondensing
Vibration IEC 60068-2-6 (Test Fc, Operating)	2 g @ 10…500 Hz
Shock, operating IEC 60068-2-27 (Test Ea, Unpackaged Shock)	30 g
Shock, nonoperating IEC 60068-2-27 (Test Ea, Unpackaged Shock)	50 g
Emissions	IEC 61000-6-4
ESD immunity IEC 61000-4-2	6 kV contact discharges 8 kV air discharges
Radiated RF immunity IEC 61000-4-3	10V/m with 1k Hz sine-wave 80% AM from 80…2000 MHz 10V/m with 200 Hz 50% Pulse 100% AM @ 900 MHz 10V/m with 200 Hz 50% Pulse 100% AM @ 1890 MHz 3V/m with 1 kHz sine-wave 80% AM from 2000…2700 MHz
EFT/B immunity IEC 61000-4-4	±4 kV at 5 kHz on unshielded output and power ports ±4 kV at 5 kHz on shielded input ports
Surge transient immunity IEC 61000-4-5	±1 kV line-line (DM) and ±2 kV line-earth (CM) on unshielded output and power ports ±2 kV line-earth (CM) on shielded input ports
Conducted RF immunity IEC 61000-4-6	10V rms with 1 kHz sine-wave 80% AM from 150 kHz…80 MHz on shielded signal ports

Certifications - 1756-CFM

Certification (when product is marked)[1]	1756-CFM
UL	UL Listed Industrial Control Equipment. See UL File E65584.
CSA	CSA Certified Process Control Equipment. See CSA File LR54689C. CSA Certified Process Control Equipment for Class I, Division 2 Group A,B,C,D Hazardous Locations. See CSA File LR69960C.
CE	European Union 2014/30/EU EMC Directive, compliant with: • EN 61326-1; Meas./Control/Lab., Industrial Requirements • EN 61000-6-2; Industrial Immunity • EN 61000-6-4; Industrial Emissions • EN 61131-2; Programmable Controllers (Clause 8, Zone A & B) European Union 2014/35/EU LVD, compliant with: EN 61131-2; Programmable Controllers (Clause 11)
RCM	Australian Radiocommunications Act, compliant with: EN 61000-6-4; Industrial Emissions
KC	Korean Registration of Broadcasting and Communications Equipment, compliant with: Article 58-2 of Radio Waves Act, Clause 3
EAC	Russian Customs Union TR CU 020/2011 EMC Technical Regulation Russian Customs Union TR CU 004/2011 LV Technical Regulation

(1) See the Product Certification link at rok.auto/certifications for Declarations of Conformity, Certificates, and other certification details.

1756-CMS1B1, 1756-CMS1C1

ControlLogix Compute modules are chassis-based modules that let you communicate directly with a ControlLogix 5570 or ControlLogix 5580 controller via the system backplane and over a network. The Compute modules offer an embedded Microsoft® Windows 10 or Linux operating system within which you can create custom applications while utilizing an application programming interface (API).

Technical Specifications - 1756-CMS1B1, 1756-CMS1C1

Attribute	1756-CMS1B1	1756-CMS1C1
Solid state drive (SSD) capacity	32 GB	
Embedded operating system	Windows 10 IoT Enterprise LTSB 64 bit	Linux 32 bit (Debian 8.9)
Onboard memory	4 GB	
Voltage and current ratings	5.1V DC @ 1.40 A	
Power consumption	7 W	
Power dissipation, max	7 W	
Thermal dissipation	23.88 BTU/hr	
Replacement battery	Panasonic Type BR1225A coin type lithium battery - Commercially available	
Weight, approx	0.394 kg (0.868 lb)	
Slot width	1	
Module location	ControlLogix chassis, any slot	
Chassis	1756-A4, 1756-A7, 1756-A10, 1756-A13,1756-A17 Series B, Series C	
Wire size	Ethernet connections Ethernet cabling and installation according to IEC 61918 and IEC 61784-5-2	
Wiring category(1)	3 - on USB port 2 - on Ethernet ports	
North American temperature code	T5	
Enclosure type rating	None (open-style)	

(1) Use this Conductor Category information for planning conductor routing. Refer to Industrial Automation Wiring and Grounding Guidelines, publication 1770-4.1.

Environmental Specifications - 1756-CMS1B1, 1756-CMS1C1

Attribute	1756-CMS1B1, 1756-CMS1C1
Temperature, operating IEC 60068-2-1 (Test Ad, Operating Cold), IEC 60068-2-2 (Test Bd, Operating Dry Heat), IEC 60068-2-14 (Test Nb, Operating Thermal Shock)	Series C Chassis: -25 °C < Ta < +60 °C (-13 °F < Ta < +140 °F) Series B Chassis: -25 °C < Ta < +50 °C (-13 °F < Ta < +122 °F)
Temperature, surrounding air, max	Series C Chassis: 60 °C (140 °F) Series B Chassis: 50 °C (122 °F)
Temperature, nonoperating IEC 60068-2-1 (Test Ab, Unpackaged Nonoperating Cold), IEC 60068-2-2 (Test Bb, Unpackaged Nonoperating Dry Heat), IEC 60068-2-14 (Test Na, Unpackaged Nonoperating Thermal Shock)	-40…+85 °C (-40…+185 °F)
Relative humidity IEC 60068-2-30 (Test Db, Unpackaged Damp Heat)	5…95% noncondensing
Vibration IEC 60068-2-6 (Test Fc, Operating)	2 g @ 10…500 Hz
Shock, operating IEC 60068-2-27 (Test Ea, Unpackaged Shock)	30 g

Environmental Specifications - 1756-CMS1B1, 1756-CMS1C1 (continued)

Attribute	1756-CMS1B1, 1756-CMS1C1
Shock, nonoperating IEC 60068-2-27 (Test Ea, Unpackaged Shock)	30 g
Emissions	IEC 61000-6-4
ESD immunity IEC 61000-4-2	4 kV contact discharges 8 kV air discharges
Radiated RF immunity IEC 61000-4-3	10V/m with 1 kHz sine-wave 80% AM from 80…2000 MHz 10V/m with 1 kHz sine-wave 80% AM from 2000…2700 MHz
EFT/B immunity IEC 61000-4-4	±2 kV at 5 kHz on Ethernet ports
Surge transient immunity IEC 61000-4-5	±2 kV line-earth (CM) on Ethernet ports
Conducted RF immunity IEC 61000-4-6	10V rms with 1 kHz sine-wave 80% AM from 150 kHz…80 MHz

Certifications - 1756-CMS1B1, 1756-CMS1C1

Certification (when product is marked)(1)	1756-CMS1B1, 1756-CMS1C1
c-UL-us	UL Listed for Class I, Division 2 Group A,B,C,D Hazardous Locations, certified for U.S. and Canada. See UL File E194810
CE	European Union 2014/30/EU EMC Directive, compliant with: • EN 61326-1; Meas./Control/Lab., Industrial Requirements • EN 61000-6-2; Industrial Immunity • EN 61000-6-4; Industrial Emissions • EN 61131-2; Programmable Controllers (Clause 8, Zone A & B) European Union 2011/65/EU RoHS, compliant with: • EN 50581; Technical documentation
RCM	Australian Radiocommunications Act, compliant with: • EN 61000-6-4; Industrial Emissions
KC	Korean Registration of Broadcasting and Communications Equipment, compliant with: Article 58-2 of Radio Waves Act, Clause 3
EAC	Russian Customs Union TR CU 020/2011 EMC Technical Regulation Russian Customs Union TR CU 004/2011 LV Technical Regulation

(1) See the Product Certification link at rok.auto/certifications for Declarations of Conformity, Certificates, and other certification details.

1756-HSC

ControlLogix high-speed counter module

1756-HSC to Allen-Bradley® 845 Incremental Encoder

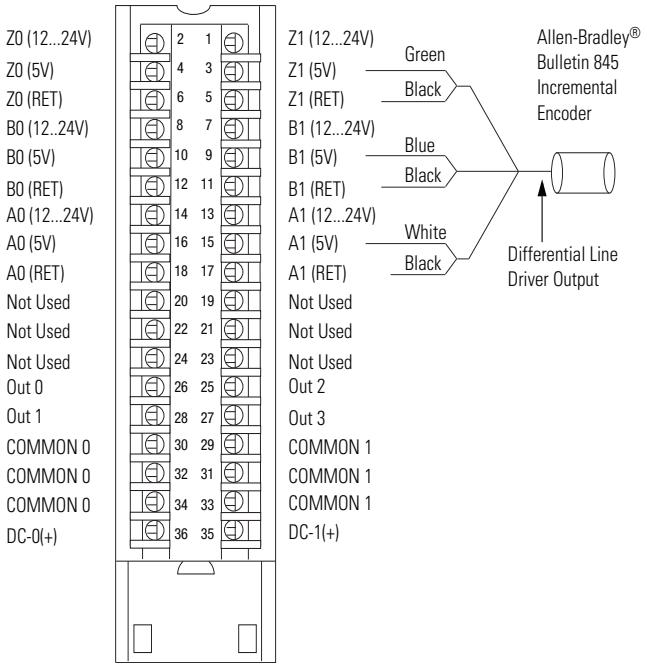

1756-HSC to Allen-Bradley Series 10,000 Photoelectric Sensor

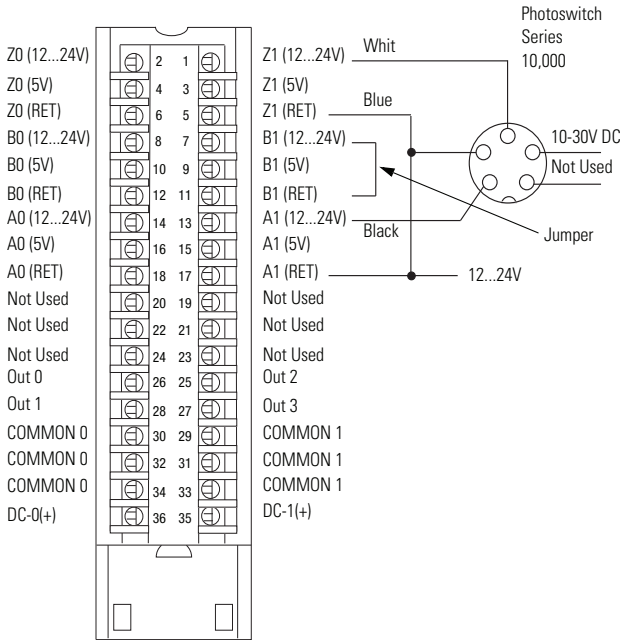

The 1756-HSC module provides four high-speed, output-switching, on-off windows. The module uses pulses for counting and frequency.

1756-HSC to Allen-Bradley 872 3-wire DC Proximity Sensor

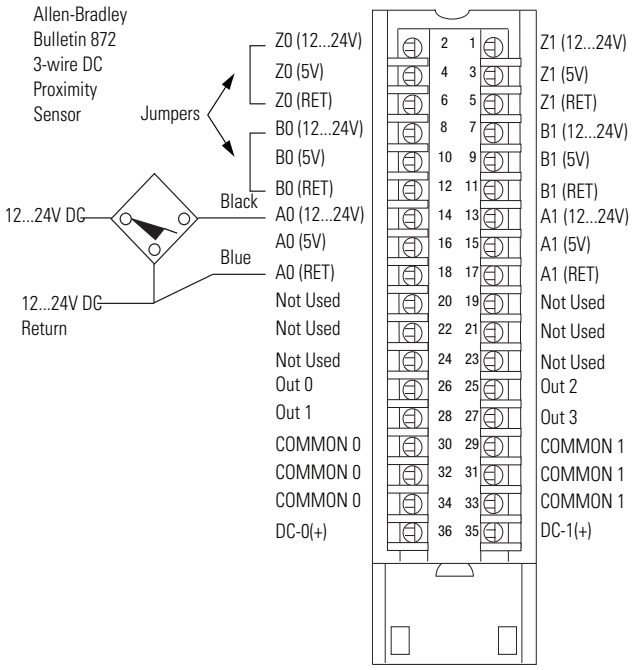

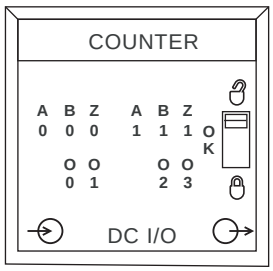

Technical Specifications - 1756-HSC

Attribute	1756-HSC
Number of counters	2
Inputs per counter	3 (A, B, Z for gate/reset)
Outputs	4 (2 points/group)
Operating voltage range[1]	5V operation: 4.5…5.5V DC 12/24V operation: 10…26.4V DC
Current draw at 5.1V	300 mA
Current draw at 24V	3 mA
Total backplane power	1.6 W
Power dissipation, max	5.6 W @ 60 °C (140 °F)
Thermal dissipation	19.1 BTU/hr
Isolation voltage	125V (continuous), basic insulation type, input group-to-backplane 30V (continuous), basic insulation type, input group-to-input group
Module keying	Electronic, software configurable
Removable terminal block	1756-TBCH 1756-TBS6H
RTB keying	User-defined mechanical
Slot width	1
Wire category	2 on signal ports 1 on power ports[2]
Enclosure type	None (open-style)
North American temperature code	T4
IEC temperature code	T4

(1) UL rating is 24V DC.

(2) Use this conductor category information for planning conductor routing as described in the system-level installation manual. See the Industrial Automation Wiring and Grounding Guidelines, publication 1770-4.1.

Input Specifications - 1756-HSC

Attribute	1756-HSC
Number of counters	2
Inputs per counter	3 (A, B, Z for gate/reset)
Input frequency, max	1 MHz in counter modes (A input) 500 kHz in rate measurement mode (A input) 250 kHz in encoder mode (A/B inputs, X1 or X4) 70 Hz with filter enabled
Count range	0…16, 777, 214
Counting frequency, max	1000 kHz
Input current, min	4 mA
Input current, nom	15 mA

Output Specifications - 1756-HSC

Attribute	1756-HSC
Outputs	4 (2 per common)
Output delay time Off to On On to Off	 20 µs nom/50 µs max 60 µs nom/300 µs max
Off-state leakage current per point, max	300 µA
On-state voltage drop, max	0.55V
Output current rating, per point(1)	20 mA @ 4.5…5.5V DC 1.0 A @ 10…31.2V DC
Current limit	< 4 A
Surge current per point	2 A for 10 ms every 1 s @ 60 °C (140 °F)
Load current per point, min	5V operation: 3 mA 12/24V operation: 40 mA
Output control	Up to two outputs are assigned to each counter channel Each output can have two 'turn-on' and 'turn-off' preset values
Short circuit protection	Electronic (Remove overload and toggle On/Off to restore.)
Reverse polarity protection	Yes (If wired incorrectly, module outputs can be permanently disabled.)
Counter, max	1 MHz
Rate measurement, max	500 kHz
Encoder, max	250 kHz
Debounce filter, max	70 Hz

(1) UL rating is 24V DC, 24VA.

Environmental Specifications - 1756-HSC

Attribute	1756-HSC
Temperature, operating IEC 60068-2-1 (Test Ad, Operating Cold), IEC 60068-2-2 (Test Bd, Operating Dry Heat), IEC 60068-2-14 (Test Nb, Operating Thermal Shock)	0…60 °C (32…140 °F)
Temperature, surrounding air, max	60 °C (140 °F)
Temperature, nonoperating IEC 60068-2-1 (Test Ab, Unpackaged Nonoperating Cold), IEC 60068-2-2 (Test Bb, Unpackaged Nonoperating Dry Heat), IEC 60068-2-14 (Test Na, Unpackaged Nonoperating Thermal Shock)	-40…+85 °C (-40…+185 °F)
Relative humidity IEC 60068-2-30 (Test dB, Unpackaged Damp Heat)	5…95% noncondensing
Vibration IEC 60068-2-6 (Test Fc, Operating)	2 g @ 10…500 Hz
Shock, operating IEC 60068-2-27 (Test Ea, Unpackaged Shock)	30 g
Shock, nonoperating IEC 60068-2-27 (Test Ea, Unpackaged Shock)	50 g
Emissions	IEC 61000-6-4
ESD immunity IEC 61000-4-2	6 kV contact discharges 8 kV air discharges

Environmental Specifications - 1756-HSC (continued)

Attribute	1756-HSC
Radiated RF immunity IEC 61000-4-3	10V/m with 1 kHz sine-wave 80% AM from 80…2000 MHz 10V/m with 200 Hz 50% Pulse 100% AM @ 900 MHz 10V/m with 200 Hz 50% Pulse 100% AM @ 1890 MHz 3V/m with 1 kHz sine-wave 80% AM from 2000…2700 MHz
EFT/B immunity IEC 61000-4-4	±4 kV at 5 kHz on power ports ±4 kV at 5 kHz on signal ports
Surge transient immunity IEC 61000-4-5	±1 kV line-line (DM) and ±2 kV line-earth (CM) on power ports ±1 kV line-line (DM) and ±2 kV line-earth (CM) on signal ports ±2 kV line-earth (CM) on shielded ports
Conducted RF immunity IEC 61000-4-6	10V rms with 1 kHz sine-wave 80% AM from 150 kHz…80 MHz on shielded signal ports

Certifications - 1756-HSC

Certification (when product is marked)(1)	1756-HSC
UL	UL Listed Industrial Control Equipment. See UL File E65584.
CSA	CSA Certified Process Control Equipment. See CSA File LR54689C. CSA Certified Process Control Equipment for Class I, Division 2 Group A,B,C,D Hazardous Locations. See CSA File LR69960C.
CE	European Union 2014/30/EU EMC Directive, compliant with: • EN 61326-1; Meas./Control/Lab., Industrial Requirements • EN 61000-6-2; Industrial Immunity • EN 61000-6-4; Industrial Emissions • EN 61131-2; Programmable Controllers (Clause 8, Zone A & B) European Union 2014/35/EU LVD, compliant with: EN 61131-2; Programmable Controllers (Clause 11)
RCM	Australian Radiocommunications Act, compliant with: EN 61000-6-4; Industrial Emissions
Ex	European Union 2014/34/EU ATEX Directive, compliant with: • EN 60079-15; Potentially Explosive Atmospheres, Protection "n" • EN 60079-0; General Requirements II 3 G Ex nA IIC T4 X Gc
KC	Korean Registration of Broadcasting and Communications Equipment, compliant with: Article 58-2 of Radio Waves Act, Clause 3
EAC	Russian Customs Union TR CU 020/2011 EMC Technical Regulation Russian Customs Union TR CU 004/2011 LV Technical Regulation

(1) See the Product Certification link at rok.auto/certifications for Declarations of Conformity, Certificates, and other certification details.

1756-LSC8XIB8I, 1756-LSC8XIB8IK

ControlLogix 10...30V low-speed counter module

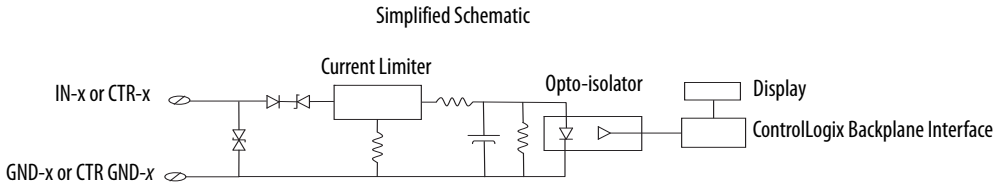

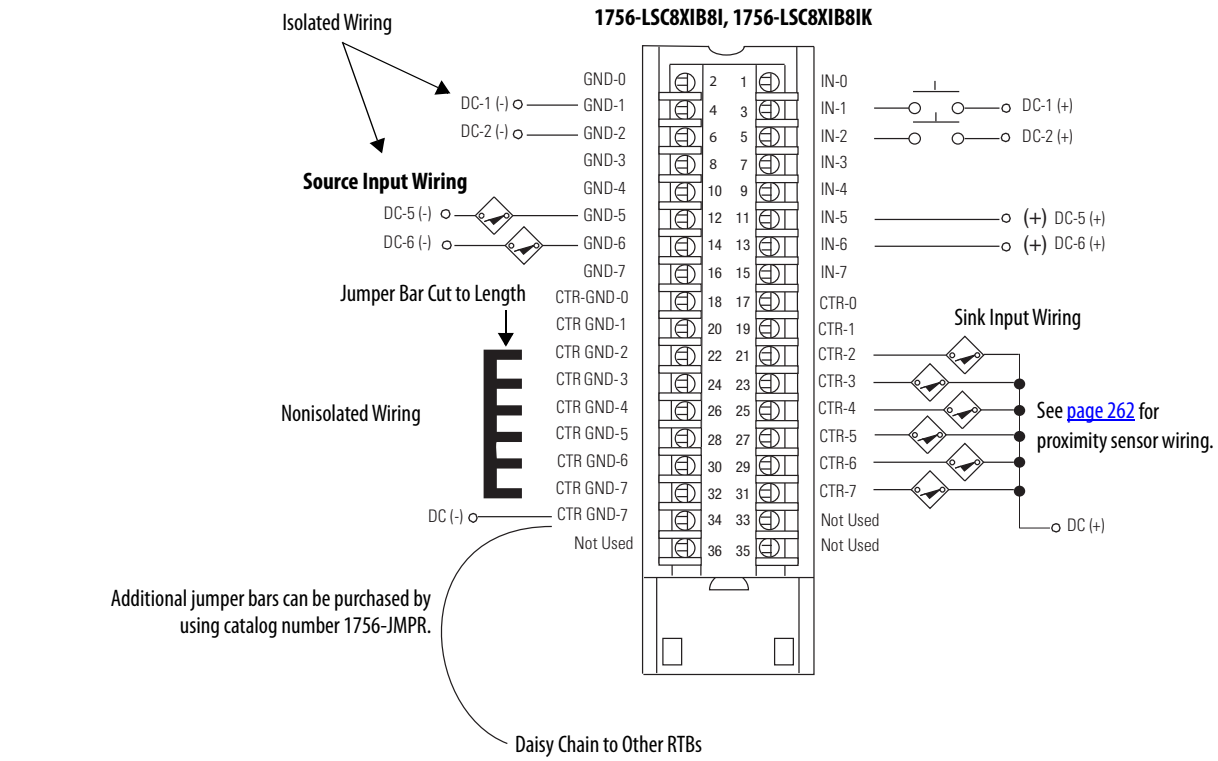

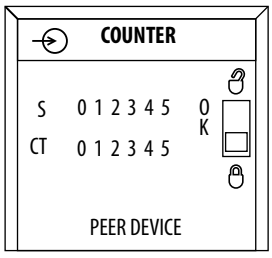

The following diagram shows how to wire a proximity sensor to the module's eight counters or eight hardware inputs. Counters use incoming pulses for counts and frequency with two user-configurable On/Off windows per counter. Hardware inputs provide standard input or counter-control functionality.

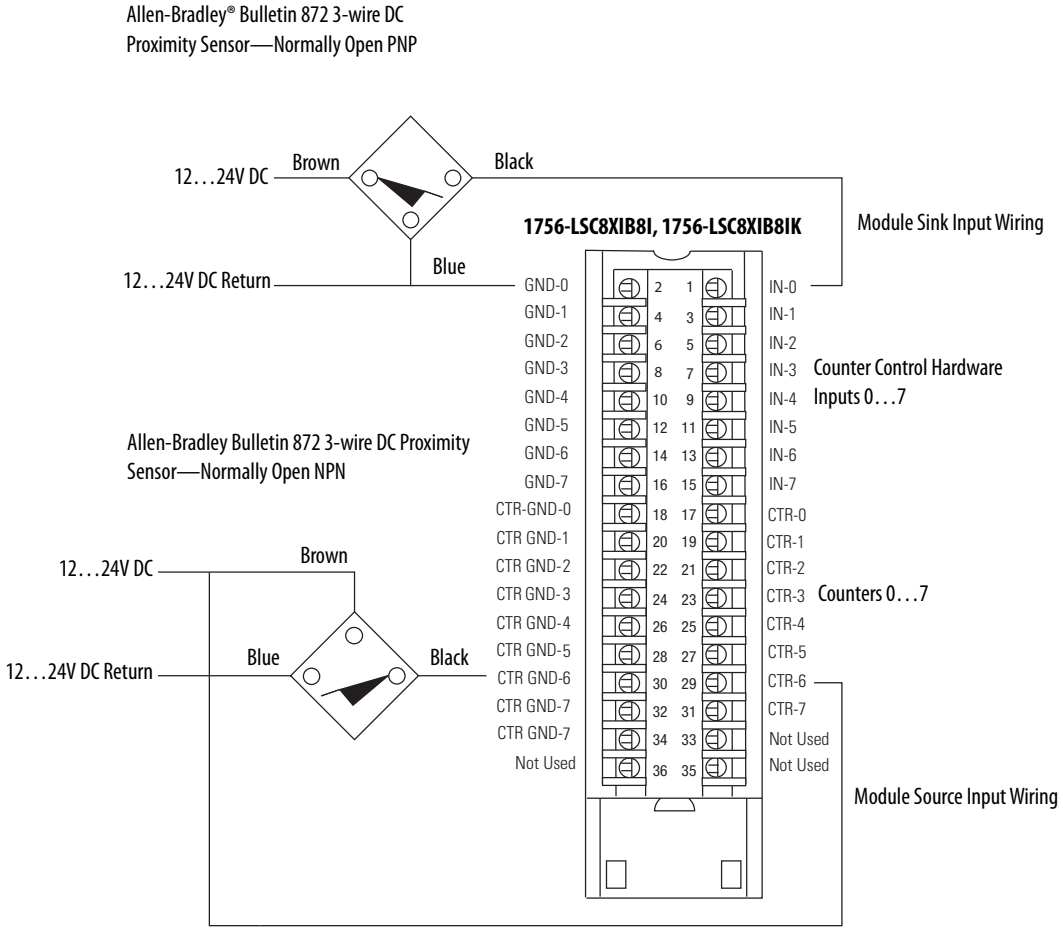

Counter Specifications - 1756-LSC8XIB8I, 1756-LSC8XIB8IK

Attribute	1756-LSC8XIB8I, 1756-LSC8XIB8IK
Number of counters	8 individually isolated
Counting frequency, max	40 kHz
Count range	0…2,147,483,648 (31-bit counter)
Voltage category	12/24V DC sink/source
Operating voltage range	10…30V DC
Off-state voltage, max	5V
Off-state current, max	1.5 mA
On-state current, min	2 mA @ 10V DC
On-state current, max	5 mA @ 30V DC
Change of state	Enter or exit user-configurable windows

Hardware Input Specifications - 1756-LSC8XIB8I, 1756-LSC8XIB8IK

Attribute	1756-LSC8XIB8I, 1756-LSC8XIB8IK
Inputs	8 individually isolated, standard input or counter-control functionality
Voltage category	12/24V DC sink/source
Operating voltage range	10…30V DC
Input voltage, nom	24V DC
Input delay time (screw to backplane) Off to On On to Off	 14 µs nom/23 µs max + user-configurable filter time of 0…30,000 µs 14 µs nom/23 µs max + user-configurable filter time of 0…30,000 µs
Off-state voltage, max	5V
Off-state current, max	1.5 mA
On-state current, min	2 mA @ 10V DC
On-state current, max	5 mA @ 30V DC
Change of state	Any transition

Module Specifications - 1756-LSC8XIB8I, 1756-LSC8XIB8IK

Attribute	1756-LSC8XIB8I, 1756-LSC8XIB8IK
Current draw @ 5.1V	275 mA
Current draw @ 24V	3 mA
Total backplane power	1.47 W
Power dissipation	3.8 W @ 60 °C (140 °F)
Thermal dissipation	12.97 BTU/hr
Input impedance, max	Six k Ω @ 30V DC
Cyclic update time	200 µs…750 ms
Isolation voltage	250V (continuous), reinforced insulation type, inputs-to-backplane 250V (continuous), basic insulation type, input-to-input
Module keying	Electronic, software configurable
Removable terminal block housing	1756-TBCH 1756-TBS6H
RTB keying	User-defined mechanical
Slot width	1
Wire category	1 on signal ports(1)
Enclosure type	None (open-style)
North American temperature code	T4A
IEC temperature code	T4
Reverse polarity protection	Yes

(1) Use this conductor category information for planning conductor routing as described in the system-level installation manual. See the Industrial Automation Wiring and Grounding Guidelines, publication 1770-4.1.

Environmental Specifications - 1756-LSC8XIB8I, 1756-LSC8XIB8IK

Attribute	1756-LSC8XIB8I, 1756-LSC8XIB8IK
Temperature, operating IEC 60068-2-1 (Test Ad, Operating Cold), IEC 60068-2-2 (Test Bd, Operating Dry Heat), IEC 60068-2-14 (Test Nb, Operating Thermal Shock)	0…60 °C (32…140 °F)
Temperature, surrounding air, max	60 °C (140 °F)
Temperature, nonoperating IEC 60068-2-1 (Test Ab, Unpackaged Nonoperating Cold), IEC 60068-2-2 (Test Bb, Unpackaged Nonoperating Dry Heat), IEC 60068-2-14 (Test Na, Unpackaged Nonoperating Thermal Shock)	-40…+85 °C (-40…+185 °F)
Relative humidity IEC 60068-2-30 (Test dB, Unpackaged Damp Heat)	5…95% noncondensing
Vibration IEC 60068-2-6 (Test Fc, Operating)	2 g @ 10…500 Hz
Shock, operating IEC 60068-2-27 (Test Ea, Unpackaged Shock)	30 g
Shock, nonoperating IEC 60068-2-27 (Test Ea, Unpackaged Shock)	50 g
Emissions	IEC 61000-6-4
ESD immunity IEC 61000-4-2	6 kV contact discharges 8 kV air discharges
Radiated RF immunity IEC 61000-4-3	10V/m with 1 kHz sine-wave 80% AM from 80…2000 MHz 10V/m with 200 Hz 50% Pulse 100% AM @ 900 MHz 10V/m with 200 Hz 50% Pulse 100% AM @ 1890 MHz 3V/m with 1 kHz sine-wave 80% AM from 2000…2700 MHz
EFT/B immunity IEC 61000-4-4	±4 kV at 5 kHz on signal ports
Surge transient immunity IEC 61000-4-5	±1 kV line-line (DM) and ±2 kV line-earth (CM) on signal ports
Conducted RF immunity IEC 61000-4-6	10V rms with 1 kHz sine-wave 80% AM from 150 kHz…80 MHz

Certifications - 1756-LSC8XIB8I, 1756-LSC8XIB8IK

Certification (when product is marked)(1)	1756-LSC8XIB8I, 1756-LSC8XIB8IK
c-UL-us	UL Listed Industrial Control Equipment, certified for US and Canada. See UL File E65584. UL Listed for Class I, Division 2 Group A,B,C,D Hazardous Locations, certified for U.S. and Canada. See UL File E194810.
CE	European Union 2014/30/EU EMC Directive, compliant with: • EN 61326-1; Meas./Control/Lab., Industrial Requirements • EN 61000-6-2; Industrial Immunity • EN 61000-6-4; Industrial Emissions • EN 61131-2; Programmable Controllers (Clause 8, Zone A & B) European Union 2014/35/EU LVD, compliant with EN 61131-2; Programmable Controllers (Clause 11)
RCM	Australian Radiocommunications Act, compliant with EN 61000-6-4; Industrial Emissions
Ex	European Union 2014/34/EU ATEX Directive, compliant with: • EN 60079-15; Potentially Explosive Atmospheres, Protection "n" • EN 60079-0; General Requirements II 3 G Ex nA IIC T4 X Gc
KC	Korean Registration of Broadcasting and Communications Equipment, compliant with Article 58-2 of Radio Waves Act, Clause 3
EAC	Russian Customs Union TR CU 020/2011 EMC Technical Regulation Russian Customs Union TR CU 004/2011 LV Technical Regulation

(1) See the Product Certification link at rok.auto/certifications for Declarations of Conformity, Certificates, and other certification details.

1756-PLS

ControlLogix programmable limit switch module

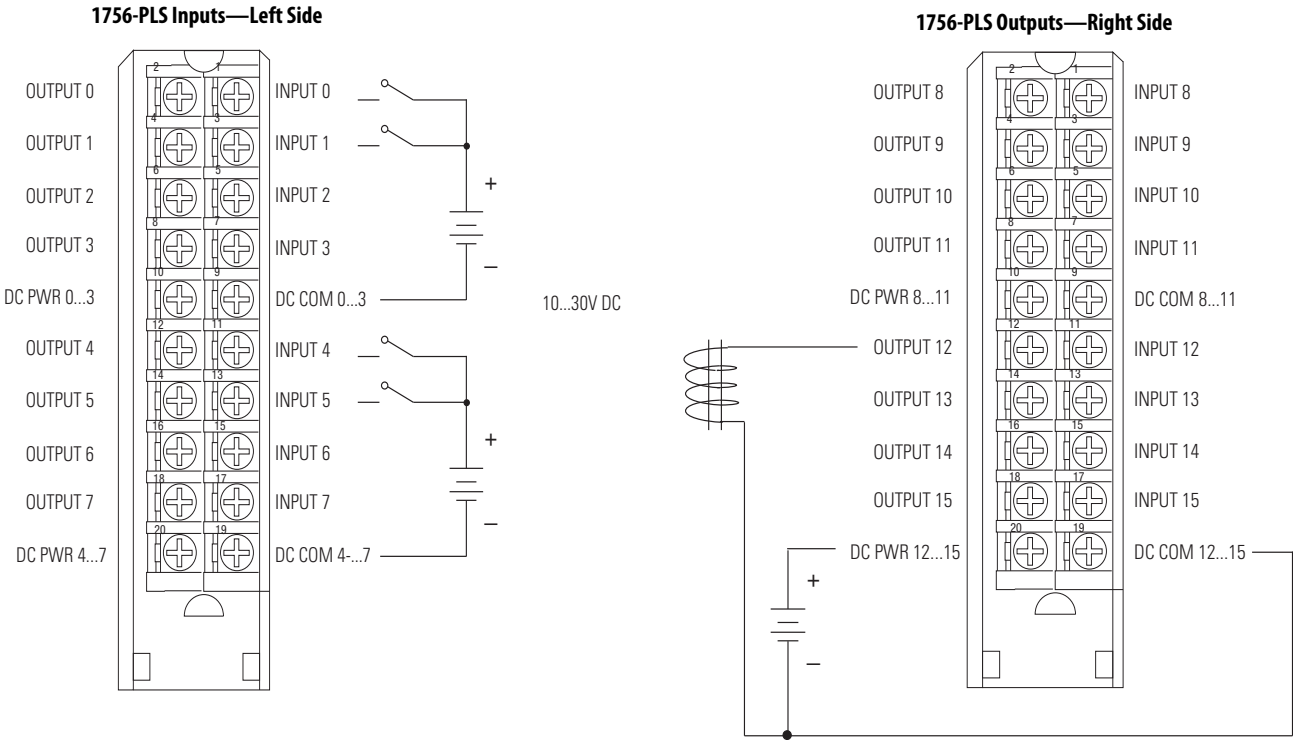

The 1756-PLS module supports enhanced packaging applications. The module requires three contiguous slots in the chassis.

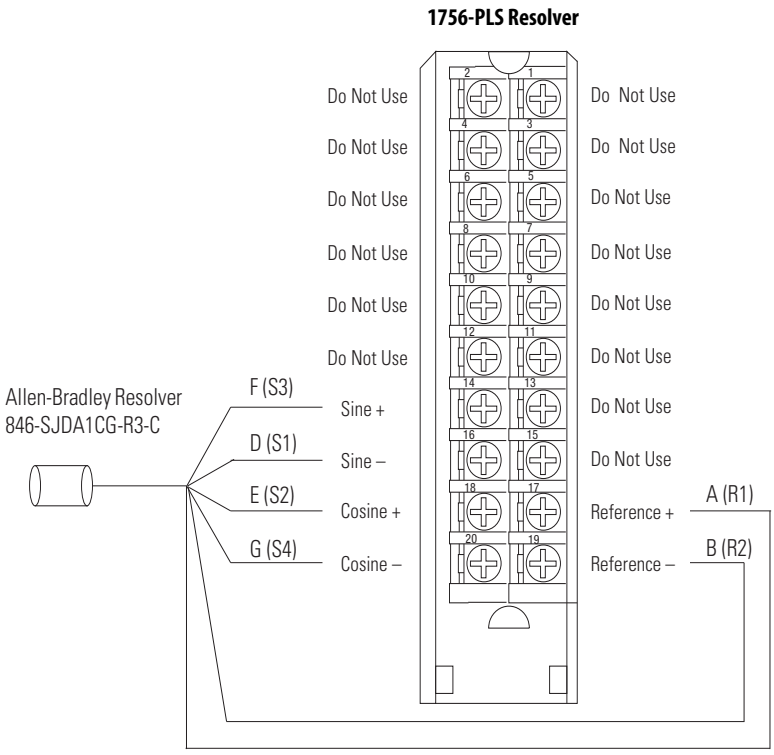

Indicator for Left Slot I/O Module

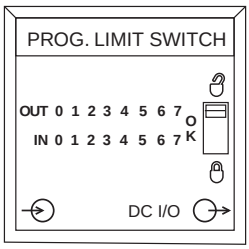

Indicator for Left Resolver Module

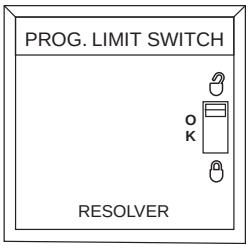

Indicator for Right Slot I/O Module

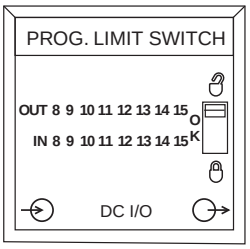

Technical Specifications - 1756-PLS

Attribute	1756-PLS
Module configuration	Left section: Two groups of four outputs and four inputs each Center section: resolver interface and I/O control Right section: Two groups of four outputs and four inputs each
Current draw at 5.1V	1 A
Current draw at 24V	125 mA
Total backplane power	8.1 W
Power dissipation, nom	22.62 W @ 30 °C (86 °F) 18.22 W @ 60 °C (140 °F)
Power dissipation, max	25.7 W @ 30 °C (86 °F) 21.3 W @ 60 °C (140 °F)
Thermal dissipation, nom	77.23 BTU/hr @ 30 °C (86 °F) 62.2 BTU/hr @ 60 °C (140 °F)
Thermal dissipation, max	87.74 BTU/hr @ 30 °C (86 °F) 72.72 BTU/hr @ 60 °C (140 °F)
Isolation voltage	250V (continuous), basic insulation type, I/O-to-backplane, I/O group-to-group, resolver-to-backplane, and resolver-to-I/O
Removable terminal block	Requires 3 RTBs: 1756-TBNH or 1756-TBSH
RTB keying	User-defined mechanical
Slot width	3
Wire category	2 on signal ports 1 on power ports(1)
Enclosure type	None (open style)
North American temperature code	T4
IEC temperature code	T4

(1) Use this conductor category information for planning conductor routing as described in the system-level installation manual. See the Industrial Automation Wiring and Grounding Guidelines, publication 1770-4.1.

Resolver Specifications - 1756-PLS

Attribute	1756-PLS
Resolver location	Center section
Compatible resolver	Allen-Bradley resolver 846-SJ*xxxx*-R3-*x* (*x* = customer options)
Resolver interface	2V rms, reference output (differential pair) 2V rms, sine, and cosine inputs (two differential pairs)
Reference voltage	2V rms ±20%
Reference frequency	5 kHz ±20%

Resolver Specifications - 1756-PLS (continued)

Attribute	1756-PLS
Digital resolution	12 bits (4096 counts from hardware)
Angular resolution	0.088°/bit
Digital count range	0…4095 (decimal)
Maximum tracking rate	±1800 RPM
Repeatability	±0.0488% of full scale
Accuracy	±0.0976% of full scale

Input Specifications - 1756-PLS

Attribute	1756-PLS
Inputs	16 (2 groups of 4 per I/O section)
Voltage category	12/24V DC
Operating voltage range(1)	10.8…31.2V DC
Input delay time (screw to backplane) Off to On On to Off	 < 15 µs @ 30 °C (86 °F) < 150 µs @ 60 °C (140 °F) < 30 µs @ 30 °C (86 °F) < 200 µs @ 60 °C (140 °F)
Power dissipation, inputs, nom	1.86 W @ 60 °C (140 °F)
Power dissipation, inputs, max	2.8 W @ 60 °C (140 °F)
Thermal dissipation, inputs, nom	6.35 BTU/hr
Thermal dissipation, inputs, max	9.56 BTU/hr
On-state voltage, min	10V DC
On-state voltage, nom	10.8…26.4V DC
On-state voltage, max	31.2V DC
Off-state voltage, max	5V DC
Off-state current, max	1.5 mA
On-state current, min	3 mA
On-state current, max	10 mA
Input impedance, max	3.3 kΩ @ 24V DC
Reverse polarity protection	Yes

(1) UL certification for 24V DC nominal. Rockwell Automation specified to 10.8…31.2V DC.

Output Specifications - 1756-PLS

Attribute	1756-PLS
Outputs	16 (2 groups of 4 per I/O section)
Voltage category	12/24V DC
Operating voltage range(1)	10…31.2V DC
Output delay time Off to On On to Off	 < 15 µs @ 60 °C (140 °F) < 25 µs @ 60 °C (140 °F)
Power dissipation, outputs, nom	5.4 W @ 30 °C (86 °F) 3.2 W @ 60 °C (140 °F)

Output Specifications - 1756-PLS (continued)

Attribute	1756-PLS
Power dissipation, outputs, max	6 W @ 30 °C (86 °F) 3.8 W @ 60 °C (140 °F)
Thermal dissipation, outputs, nom	18.43 BTU/hr @ 30 °C (86 °F) 10.93 BTU/hr @ 60 °C (140 °F)
Thermal dissipation, outputs, max	21.48 BTU/hr @ 30 °C (86 °F) 11.93 BTU/hr @ 60 °C (140 °F)
Output power dissipation/slot thermal dissipation	3.2 W @ 60 °C (140 °F) 10.93 BTU/hr @ 60 °C (140 °F)
Off-state leakage current per point, nom	<10 µA @ 60 °C (140 °F)
Off-state leakage current per point, max	300 mA @ 60 °C (140 °F)
On-state voltage, min	10V DC
On-state voltage, nom	10.8…26.4V DC
On-state voltage, max	31.2V DC
Output voltage drop, max	0.55V DC
Current per point, max	1 A @ 30 °C(2) (86 °F)
Current per group, max	4 A @ 30 °C(3) (86 °F)
Current per module, max	8 A @ 30 °C(4) (86 °F)
Current limit	< 4 A
Surge current per point	2 A for 10 ms every 1 s @ 60 °C (140 °F)
Load current per point, min	40 mA
Output switching time	Switching 1 A @ 24V DC
Short circuit protection	Electronic (No indication of fault. Remove load and toggle on/off to restore.)
Reverse polarity protection	Yes, current limited. (If wired incorrectly, outputs can be permanently disabled.)

(1) UL certification for 24V DC nominal. Rockwell Automation specified to 10.8…31.2V DC.
(2) Derate 16.7 mA/ °C above 30 °C (86 °F): 0.5 A @ 60 °C (140 °F).
(3) Derate 66.8 mA/ °C above 30 °C (86 °F): 2 A @ 60 °C (140 °F).
(4) Derate 133.6 mA/ °C above 30 °C (86 °F): 4 A @ 60 °C (140 °F).

Environmental Specifications - 1756-PLS

Attribute	1756-PLS
Temperature, operating IEC 60068-2-1 (Test Ad, Operating Cold), IEC 60068-2-2 (Test Bd, Operating Dry Heat), IEC 60068-2-14 (Test Nb, Operating Thermal Shock)	0…60 °C (32…140 °F)
Temperature, surrounding air, max	60 °C (140 °F)
Temperature, nonoperating IEC 60068-2-1 (Test Ab, Unpackaged Nonoperating Cold), IEC 60068-2-2 (Test Bb, Unpackaged Nonoperating Dry Heat), IEC 60068-2-14 (Test Na, Unpackaged Nonoperating Thermal Shock)	-40…+85 °C (-40…+185 °F)
Relative humidity IEC 60068-2-30 (Test dB, Unpackaged Damp Heat)	5…95% noncondensing
Vibration IEC 60068-2-6 (Test Fc, Operating)	2 g @ 10…500 Hz
Shock, operating IEC 60068-2-27 (Test Ea, Unpackaged Shock)	30 g

Environmental Specifications - 1756-PLS (continued)

Attribute	1756-PLS
Shock, nonoperating IEC 60068-2-27 (Test Ea, Unpackaged Shock)	50 g
Emissions	IEC 61000-6-4
ESD immunity IEC 61000-4-2	6 kV contact discharges 8 kV air discharges
Radiated RF immunity IEC 61000-4-3	10V/m with 1 kHz sine-wave 80% AM from 80…2000 MHz 10V/m with 200 Hz 50% Pulse 100% AM @ 900 MHz 10V/m with 200 Hz 50% Pulse 100% AM @ 1890 MHz 3V/m with 1 kHz sine-wave 80% AM from 2000…2700 MHz
EFT/B immunity IEC 61000-4-4	±4 kV at 5 kHz on unshielded I/O and power ports ±2 kV at 5 kHz on shielded resolver ports
Surge transient immunity IEC 61000-4-5	±1 kV line-line (DM) and ±2 kV line-earth (CM) on unshielded I/O and power ports ±2 kV line-earth (CM) on shielded resolver ports
Conducted RF immunity IEC 61000-4-6	10V rms with 1 kHz sine-wave 80% AM from 150 kHz…80 MHz on shielded signal ports

Certifications - 1756-PLS

Certification (when product is marked)[1]	1756-PLS
UL	UL Listed Industrial Control Equipment. See UL File E65584.
CSA	CSA Certified Process Control Equipment. See CSA File LR54689C. CSA Certified Process Control Equipment for Class I, Division 2 Group A,B,C,D Hazardous Locations. See CSA File LR69960C.
CE	European Union 2014/30/EU EMC Directive, compliant with: • EN 61326-1; Meas./Control/Lab., Industrial Requirements • EN 61000-6-2; Industrial Immunity • EN 61000-6-4; Industrial Emissions • EN 61131-2; Programmable Controllers (Clause 8, Zone A & B) European Union 2014/35/EU LVD, compliant with: EN 61131-2; Programmable Controllers (Clause 11)
RCM	Australian Radiocommunications Act, compliant with: EN 61000-6-4; Industrial Emissions
Ex	European Union 2014/34/EU ATEX Directive, compliant with: • EN 60079-15; Potentially Explosive Atmospheres, Protection "n" • EN 60079-0; General Requirements II 3 G Ex nA IIC T4 X Gc
EAC	Russian Customs Union TR CU 020/2011 EMC Technical Regulation Russian Customs Union TR CU 004/2011 LV Technical Regulation

(1) See the Product Certification link at rok.auto/certifications for Declarations of Conformity, Certificates, and other certification details.

ControlLogix I/O Accessories

Place 1756 I/O modules in any slot in a 1756 chassis. Each chassis requires a power supply.

Product	Cat. No.
Chassis	1756-A4, 1756-A7, 1756-A10, 1756-A13, 1756-A17
Power supply, standard	1756-PA72/C, 1756-PA75/B, 1756-PB72/C, 1756-PB75/B, 1756-PC75/B, 1756-PH75/B
Power supply, redundant	1756-PA75R, 1756-PB75R, 1756-PSCA2 1756-CPR2 cable

- For more information on chassis specifications, see ControlLogix Chassis Specifications Technical Data, publication 1756-TD006.
- For more information on power supply specifications, see ControlLogix Power Supply Specifications Technical Data, publication 1756-TD005.
- For more information on how to choose the right power supply for your application, see the additional product documentation, for example, a user manual, for your 1756 ControlLogix I/O module.

1756 Removable Terminal Blocks

Removable terminal blocks (RTBs) provide a flexible interconnection between your plant wiring and 1756 I/O modules. The RTB plugs into the front of the I/O module. The type of module determines which RTB you need. You can choose screw-clamp or spring-clamp RTBs.

RTBs are not shipped with I/O modules. You must order them separately. The standard housing on the front of the wiring arm is not deep enough for 2.5 mm^2 (14 AWG) wiring. If you plan to use 2.5 mm^2 (14 AWG) wiring, also order the extended housing.

ATTENTION: If separate power sources are used, do not exceed the specified isolation voltage: referring to the specifications for each individual module on the preceding pages.

WARNING: Do not use the 1756-TBNHS, 1756-TBSHS, 1756-TBCHS, 1756-TBS6HS safety RTBs, and the 1756-TBES Extended-depth terminal block housing ,on non-safety I/O modules.

RTB Specifications - 1756-TBNH, 1756-TBNHS, 1756-TBSH, 1756-TBSHS, 1756-TBCH, 1756-TBCHS, 1756-TBS6H, 1756-TBS6HS, 1756-TBE, 1756-TBES

Attribute	1756-TBNH, 1756-TBNHS	1756-TBSH, 1756-TBSHS	1756-TBCH, 1756-TBCHS	1756-TBS6H, 1756-TBS6HS	1756-TBE, 1756-TBES
Description	20-position NEMA screw-clamp removable block	20-pin spring-clamp removable terminal block with standard housing	36-pin cage-clamp removable terminal block with standard housing	36-pin spring-clamp removable terminal block with standard housing	Extended depth terminal block housing
Screw torque	1.36 N•m (12 lb•in)	–	0.5 N•m (4.4 lb•in)	–	–
Wire size(1)	0.33…2.1 mm^2 (22…14 AWG) solid or stranded copper wire, rated at 90 °C (194 °F) or greater, 1.2 mm (3/64 in.) insulation max Do not wire more than two conductors on any single terminal.	0.33…2.1 mm^2 (22…14 AWG) solid or stranded copper wire, rated at 90 °C (194 °F) or greater, 1.2 mm (3/64 in.) insulation max Do not wire multiple conductors on any single terminal.	Single wire connection: 0.33…2.1 mm^2 (22…14 AWG) solid or stranded copper wire, rated at 90 °C (194 °F) or greater, 1.2 mm (3/64 in.) insulation max Double wire connection: 0.33…1.3 mm^2 (22…16 AWG) solid or stranded copper wire, rated at 90 °C (194 °F) or greater, 1.2 mm (3/64 in.) insulation max Do not wire more than two conductors on any single terminal.	0.33…2.1 mm^2 (22…14 AWG) solid or stranded copper wire, rated at 90 °C (194 °F) or greater, 1.2 mm (3/64 in.) insulation max Do not wire multiple conductors on any single terminal.	
Screwdriver width	8 mm (5/16 in.) Max	–	3.2 mm (1/8 in.)	–	–

(1) Maximum wire size requires extended housing, catalog number 1756-TBE.

Wiring Systems

As an alternative to buying RTBs and connecting the wires yourself, you can buy a wiring system of the following:

- Interface modules (IFMs) that provide the output terminal blocks for digital I/O modules. Use the pre-wired cables that match the I/O module to the IFM.
- Analog interface modules (AIFMs) that provide the output terminal blocks for analog I/O modules. Use the pre-wired cables that match the I/O module to the AIFM.
- I/O module-ready cables. One end of the cable assembly is an RTB that plugs into the front of the I/O module. The other end has individually color-coded conductors that connect to a standard terminal block.

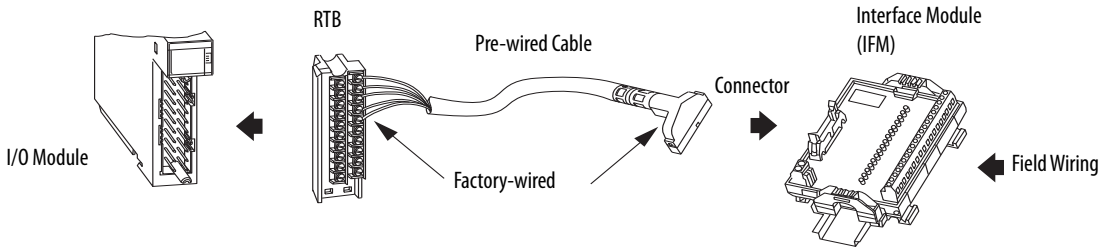

Additional Resources

These documents contain additional information concerning related products from Rockwell Automation.

Resource	Description
ControlLogix System User Manual, publication 1756-UM001	Provides information on how to use a ControlLogix system.
ControlLogix 5580 and GuardLogix 5580 Controllers User Manual, publication 1756-UM543	Provides information on how to use a ControlLogix 5580 controllers.
Industrial Automation Wiring and Grounding Guidelines, publication 1770-4.1	Provides general guidelines for installing a Rockwell Automation industrial system.
Product Certifications website, rok.auto/certifications	Provides declarations of conformity, certificates, and other certification details.

You can view or download publications at http://www.rockwellautomation.com/literature/. To order paper copies of technical documentation, contact your local Allen-Bradley Distributor or Rockwell Automation sales representative.

Notes:

Rockwell Automation Support

Use the following resources to access support information.

Technical Support Center	Knowledgebase Articles, How-to Videos, FAQs, Chat, User Forums, and Product Notification Updates.	www.rockwellautomation.com/knowledgebase
Local Technical Support Phone Numbers	Locate the phone number for your country.	www.rockwellautomation.com/global/support/get-support-now.page
Direct Dial Codes	Find the Direct Dial Code for your product. Use the code to route your call directly to a technical support engineer.	www.rockwellautomation.com/global/support/direct-dial.page
Literature Library	Installation Instructions, Manuals, Brochures, and Technical Data.	www.rockwellautomation.com/literature
Product Compatibility and Download Center (PCDC)	Get help determining how products interact, check features and capabilities, and find associated firmware.	www.rockwellautomation.com/global/support/pcdc.page

Documentation Feedback

Your comments will help us serve your documentation needs better. If you have any suggestions on how to improve this document, complete the How Are We Doing? form at http://literature.rockwellautomation.com/idc/groups/literature/documents/du/ra-du002_-en-e.pdf.

Rockwell Automation maintains current product environmental information on its website at http://www.rockwellautomation.com/rockwellautomation/about-us/sustainability-ethics/product-environmental-compliance.page.

Allen-Bradley, ControlLogix, GuardLogix, LISTEN. THINK. SOLVE., Rockwell Automation, Rockwell Software, and Studio 5000 Logix Designer are trademarks of Rockwell Automation, Inc.
CIP Sync is a trademark of ODVA, Inc.
Microsoft is a trademark of Microsoft Corporation
Trademarks not belonging to Rockwell Automation are property of their respective companies.

Rockwell Otomasyon Ticaret A.Ş., Kar Plaza İş Merkezi E Blok Kat:6 34752 İçerenköy, İstanbul, Tel: +90 (216) 5698400

www.rockwellautomation.com

Power, Control and Information Solutions Headquarters

Americas: Rockwell Automation, 1201 South Second Street, Milwaukee, WI 53204-2496 USA, Tel: (1) 414.382.2000, Fax: (1) 414.382.4444
Europe/Middle East/Africa: Rockwell Automation NV, Pegasus Park, De Kleetlaan 12a, 1831 Diegem, Belgium, Tel: (32) 2 663 0600, Fax: (32) 2 663 0640
Asia Pacific: Rockwell Automation, Level 14, Core F, Cyberport 3, 100 Cyberport Road, Hong Kong, Tel: (852) 2887 4788, Fax: (852) 2508 1846

Publication 1756-TD002M-EN-E - December 2019
Supersedes Publication 1756-TD002L-EN-E - June 2019

Copyright © 2019 Rockwell Automation, Inc. All rights reserved. Printed in the U.S.A.