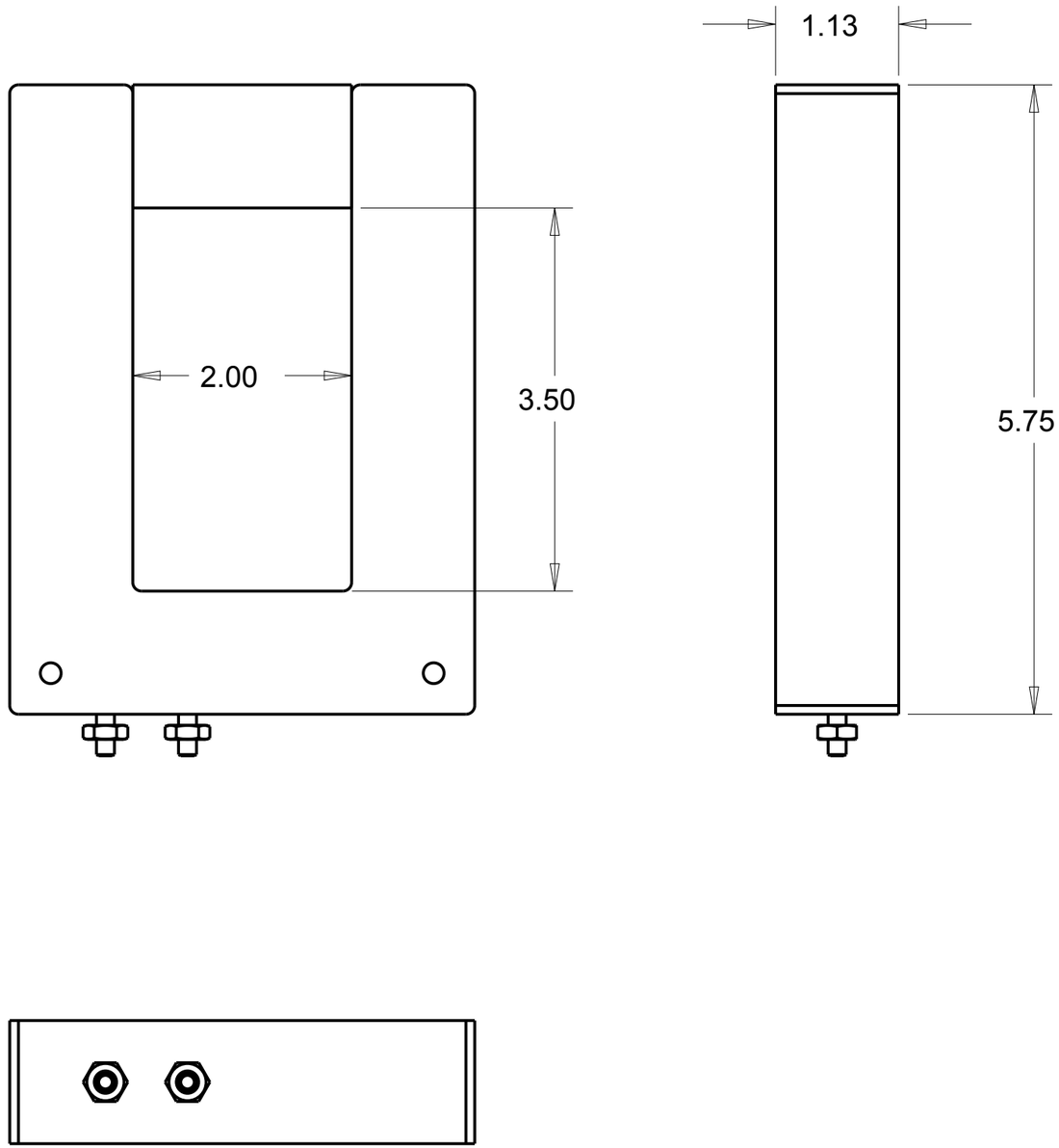

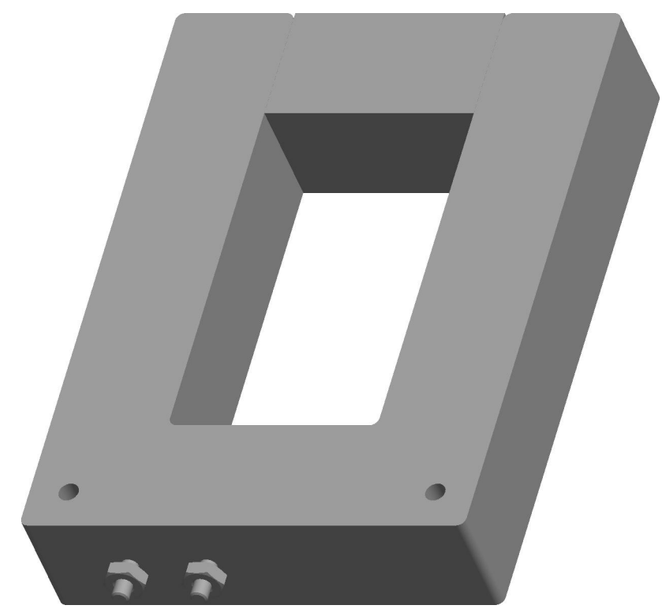

Rockwell Automation

CONFIDENTIAL AND PROPRIETARY INFORMATION.
THIS DOCUMENT CONTAINS CONFIDENTIAL AND PROPRIETARY INFORMATION OF ROCKWELL AUTOMATION, INC. AND MAY NOT BE USED, COPIED OR DISCLOSED TO OTHERS, EXCEPT WITH THE AUTHORIZED WRITTEN PERMISSION OF ROCKWELL AUTOMATION, INC.

DESCRIPTION
1411-617.drw
1411-617
2D PDF Drawing

SHEET 1 OF 1

SIZE	DIR	VER
B	10004774270	00

DRAWN BY: AMAVILA
DATE: 4/16/19