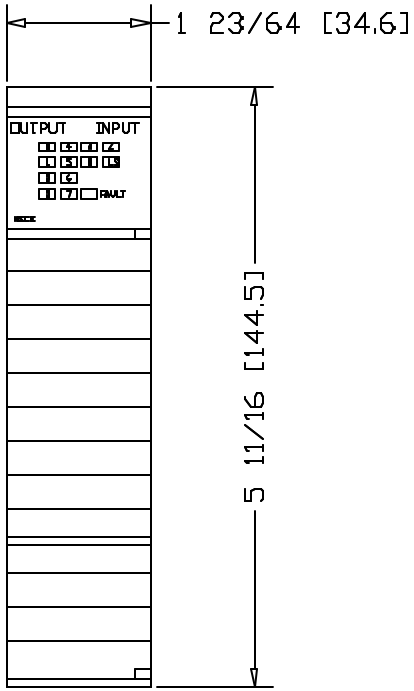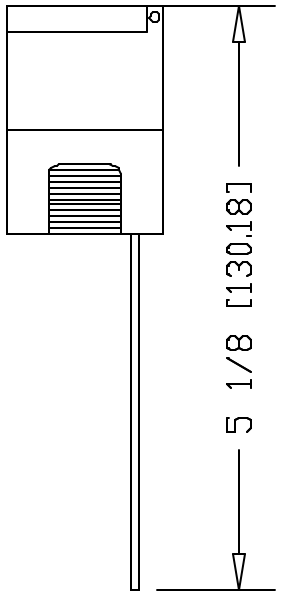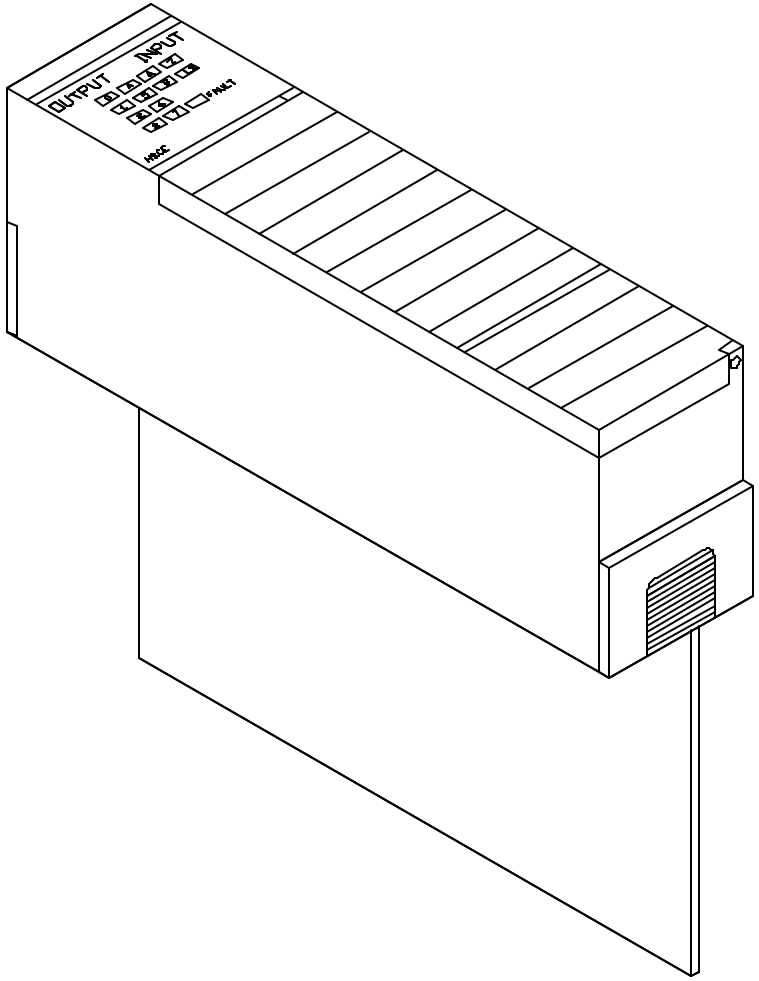1746-HSCE
HIGH SPEED COUNTER ENCODER