# Installation Instructions—PHOTOSWITCH® Series 9000 On/Off and Timing Photoelectric Sensors

| All Sensors | Retroreflective | Polarized Retroreflective | ClearSight™ | Standard Diffuse | Long Range Diffuse | Extended Range Diffuse | Transmitted Beam | | | Fiber Optic | |
|---|---|---|---|---|---|---|---|---|---|---|---|
| | | | | | | | Source ❶ | | Receiver | Plastic Visible Red | Glass Infrared |
| Sensing Distance | — | | 1.2m (4ft) | 1.5m (5ft) | 3.0m (10ft) | 4.2m (14ft) | 61m (200ft) | 152m (500ft) | Depends on Light Source Selected | Depends on Fiber Optic Selected | |
| 78mm(3in) Reflector | 9.1m (30ft) | 4.9m (16ft) | — | — | | — | | | | | |
| 32mm(1.25in) Reflector | 3.6m (12ft) | 2m (6.5ft) | — | — | | — | | | | | |
| 16mm(0.625in) Reflector | 3m (10ft) | 1m (3ft) | — | — | | — | | | | | |
| Transmitting LED | Visible Red 660nm | | | Infrared 880nm | | Infrared 880mn | | | — | Visible Red 660nm | Infrared 880mn |
| Indicators | Yellow: Power, Green: Output, and Red: Margin/SCP ❷ | | | | | | Yellow: Power, Green: Output, and Red: Margin/SCP | | | | |
| Field of View | 1.5° | | | 3.5° | 6.5° | 3.5° | 1.5° | | | Depends on Fiber Optic Selected | |
| Sensitivity Adjustment | Single-Turn Potentiometer | | | | | | | | | | |
| Operating Temperature | -34°C to +70°C (-29°F to +158°F) Except models with solid state and relay output (see page 8). | | | | | -34°C to +70°C (-29°F to +158°F) | | | | | |
| Relative Humidity | 5% to 95% | | | | | 5% to 95% | | | | | |
| Housing/Lens Material | Valox®/Acrylic | | | | | Valox®/Acrylic | | | | | |
| Operating Environment | NEMA 3, 4X, 6P, 12, 13, IP67, 1200 psi washdown, IP69K | | | | | | | | | | |
| Approvals | UL listed, CSA certified, CE marked for all applicable directives | | | | | UL listed, CSA certified, CE marked for all applicable directives | | | | | |
| Protections | All Versions: False Pulse, Solid State Output Versions: Short Circuit and Overload, DC Versions: Reverse Polarity | | | | | All Versions: False Pulse, Solid State Output Versions: Short Circuit and Overload, DC Versions: Reverse Polarity | | | | | |
| Vibration | 10-55 Hz, 1 mm amplitude, Meets or exceeds IEC 947-5-2 | | | | | 10-55 Hz, 1 mm amplitude, Meets or exceeds IEC 947-5-2 | | | | | |
| Shock | 30G with 1 ms pulse duration, Meets or exceeds IEC 947-5-2 | | | | | 30G with 1 ms pulse duration, Meets or exceeds IEC 947-5-2 | | | | | |
| **10-30V DC Sensors—NPN and PNP** | | | | | | | | | | | |
| Catalog Number—2m 300V cable | 42G[1]U-9000 | 42G[1]U-9200 | 42G[1]C-9200 | 42G[4]P-9000 | 42GRP-9040 | 42GRP-9070 | 42GRL-9000 | 42GRL-9040 | 42G[1]R-9000 | 42G[1]F-9100 | 42G[1]F-9000 |
| Catalog Number—4-pin DC micro QD | 42G[1]U-9000-QD | 42G[1]U-9200-QD | 42G[1]C-9200-QD | 42G[4]P-9000-QD | 42GRP-9040-QD | 42GRP-9070-QD | 42GRL-9000-QD | 42GRL-9040-QD | 42G[1]R-9000-QD | 42G[1]F-9100-QD | 42G[1]F-9000-QD |
| Catalog Number—4-pin mini QD | 42G[1]U-9000-QD1 | 42G[1]U-9200-QD1 | 42G[1]C-9200-QD1 | 42G[4]P-9000-QD1 | 42GRP-9040-QD1 | 42GRP-9070-QD1 | 42GRL-9002-QD | 42GRL-9042-QD | 42G[1]R-9000-QD1 | 42G[1]F-9100-QD1 | 42G[1]F-9000-QD1 |
| Supply Current | 30mA | | | | | 50mA | 15mA | | 25mA | 30mA | |
| Output Energized | Light/Dark Selectable | | | | | Light/dark selectable | Not applicable | | Light/Dark Selectable | | |
| Load Current | 250mA ❸ | | | | | 250mA | Not applicable | | 250mA | | |
| Leakage Current | 10µA | | | | | 10µA | Not applicable | | 10µA | | |
| Power Consumption | 4VA max | | | | | 4VA max | 4VA max | | | | |
| Response Time | 2ms [2] | 2ms [2] | 2ms [2] | 2ms [2] | 2ms | 2ms | Not applicable | | 5ms | 2ms | |
| **10-55V DC/20-40V AC Sensors—SPDT EM Relay** | | | | | | | | | | | |
| Catalog Number—2m 300V cable | 42G[1]U-9001 | 42G[1]U-9201 | — | 42G[1]P-9001 | 42GRP-9041 | — | — | | 42GRR-9001 | 42G[1]F-9101 | 42G[1]F-9001 |
| Catalog Number—5-pin mini QD | 42G[1]U-9001-QD | 42G[1]U-9201-QD | — | 42G[1]P-9001-QD | 42GRP-9041-QD | — | — | | 42GRR-9001-QD | 42G[1]F-9101-QD | 42G[1]F-9001-QD |
| Supply Current | 40mA | | — | 40mA | | | — | | 35mA | 40mA | |
| Output Energized | Light/Dark Selectable | | — | Light/Dark Selectable | | | Not applicable | | Light/Dark Selectable | Light/Dark Selectable | |
| Load Current | 2A/132V AC, 1A/264V AC, 1A/150V DC | | — | 2A/132V AC, 1A/264V AC, 1A/150V DC | | | — | | 2A/132V AC, 1A/264V AC, 1A/150V DC | 2A/132V AC, 1A/264V AC, 1A/150V DC | |
| Leakage Current | Not applicable | | — | Not applicable | | | — | | Not applicable | | |
| Power Consumption | 2.2 watts/1.6VA max | | — | 2.2 watts/1.6VA max | | | — | | — | 3.0VA max | |
| Response Time | 15ms [3] | 15ms [3] | — | 15ms [3] | 15ms | | — | | 23ms | 15ms | |
| **70-264V DC/60-264V AC Sensors—SPDT EM Relay** | | | | | | | | | | | |
| Catalog Number—2m 300V cable | 42G[1]U-9002 | 42G[1]U-9202 | 42G[1]C-9202 | 42G[1]P-9002 | 42GRP-9042 | 42GRP-9072 | — | — | 42G[1]R-9002 | 42G[1]F-9102 | 42G[1]F-9002 |
| Catalog Number—5-pin mini QD | 42G[1]U-9002-QD | 42G[1]U-9202-QD | 42G[1]C-9202-QD | 42G[1]P-9002-QD | 42GRP-9042-QD | 42GRP-9072-QD | — | — | 42G[1]R-9002-QD | 42G[1]F-9102-QD | 42G[1]F-9002-QD |
| Supply Current | 15mA | | | | | 15mA | — | | 10mA | 15mA | |
| Output Energized | Light/Dark Selectable | | | | | Light/Dark Selectable | — | | Light/Dark Selectable | | |
| Load Current | 2A/132V AC, 1A/264V AC, 1A/150V DC | | | | | 2A/132V AC, 1A/264V AC, 1A/150V DC | — | | 2A/132V AC, 1A/264V AC, 1A/150V DC | | |
| Leakage Current | — | | | | | | — | | Not applicable | | |
| Power Consumption | 4 watts/4VA max | | | | | 4VA max | — | | 4VA max | | |
| Response Time | 15ms [3] | 15ms [3] | 15ms [3] | 15ms [3] | 15ms | 15ms | — | | 23ms | 15ms | |
| **70-264V AC/DC Sensors—Solid State Isolated N.O.** | | | | | | | | | | | |
| Catalog Number—2m 300V cable | 42G[1]U-9003 | 42G[1]U-9203 | 42G[1]C-9203 | 42G[1]P-9003 | 42GRP-9043 | — | — | — | 42GRR-9003 | 42G[1]F-9103 | 42G[1]F-9003 |
| Catalog Number—4-pin mini QD | 42G[1]U-9003-QD | 42G[1]U-9203-QD | 42G[1]C-9203-QD | 42G[1]P-9003-QD | 42GRP-9043-QD | — | — | — | 42GRR-9003-QD | 42G[1]F-9103-QD | 42G[1]F-9003-QD |
| Catalog Number—4-pin AC micro QD | 42G[1]U-9003-QD1 | 42G[1]U-9203-QD1 | 42G[1]C-9203-QD1 | 42G[1]P-9003-QD1 | 42GRP-9043-QD1 | — | — | 42GRL-9043-QD1 | 42GRR-9003-QD1 | 42G[1]F-9103-QD1 | 42G[1]F-9003-QD1 |
| Supply Current | 15mA | | | | | | | 15mA | 15mA | 15mA | |
| Output Energized | Light/Dark Selectable | | | | | | Not applicable | | Light/Dark Selectable | Light/Dark Selectable | |
| Load Current | 300mA | | | | | | Not applicable | | 300mA | 300mA | |
| Leakage Current | 1mA at 264V AC/DC | | | | | | Not applicable | | 1mA at 264V AC/DC | 1mA at 264V AC/DC | |
| Power Consumption | 4 watts/4VA max | | | | | | — | 4VA max | 4VA max | 4VA max | |
| Response Time | 2ms [2] | 2ms [2] | 2ms [2] | 2ms [2] | 2ms | | — | — | 15ms | 2ms | |

[1] = "R" for On/Off or "T" for timer version; [2] = 5ms for timer versions; [3] = 18ms for timer versions; [4] = "L" for linear sense potentiometer, "S" for teachable version, "R" for nonlinear sense pot., or "T" for timer version

❶ Transmitted Beam Source rated 10-264V AC/DC. ❷ Red: illuminates when margin ≤ 0.5x (no target) and ≥ 2.5x (target) ❸ 100mA for 42GSP and 9000 and 42GLP-9000 models.

# Wiring Diagrams

## All Models Except Transmitted Beam Source

### Cable Model: 9_ _0

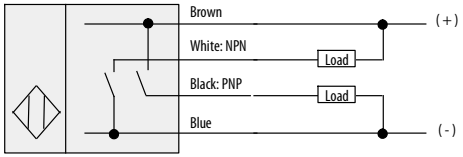


### 4-pin DC Micro QD Model: 9_ _0-QD

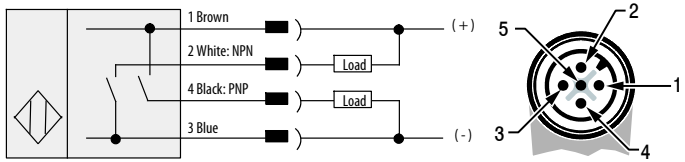


### 4-pin DC Mini QD Model: 9_ _0-QD1

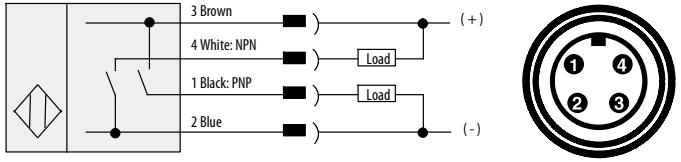


### Cable Model: 9_ _3

### AC/DC Mini QD Model: 9_ _3-QD

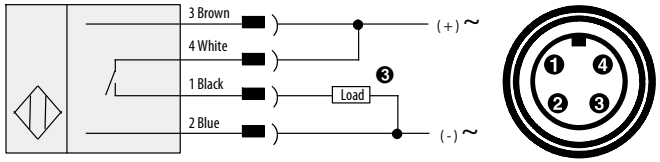


### AC/DC Micro QD Model: 9_ _3-QD1

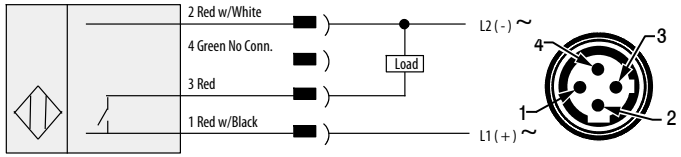


❸ Load can be placed on either black or white wire to create sourcing or sinking respectively.

### Cable Model: 9_ _1, 9_ _2

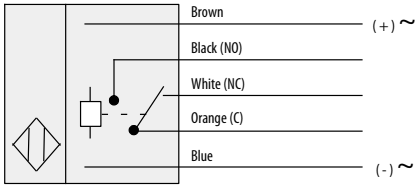


### 5-pin AC/DC Mini QD Model: 9_ _1-QD, 9_ _2-QD

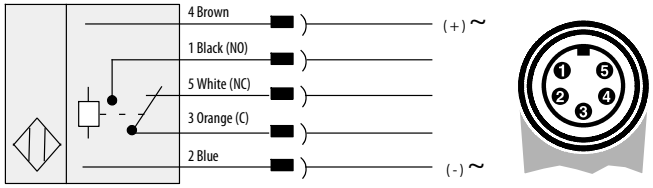


### Transmitted Beam Source
### Cable Model: 42GRL-90_ _

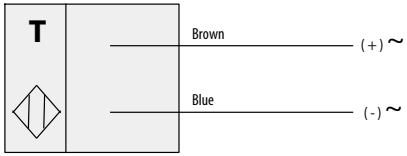


### AC/DC Mini QD Model: 42GRL-90_2-QD

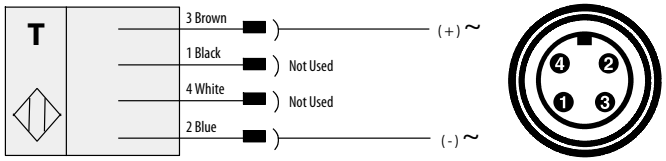


### DC Micro QD Model: 42GRL-90_0-QD

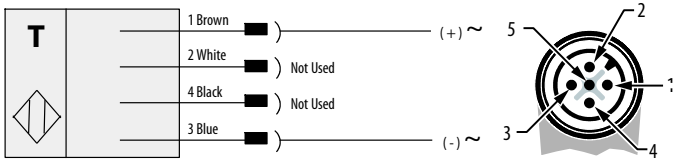


### 4-pin AC/DC Micro QD Model: 42GRL-90_3-QD1

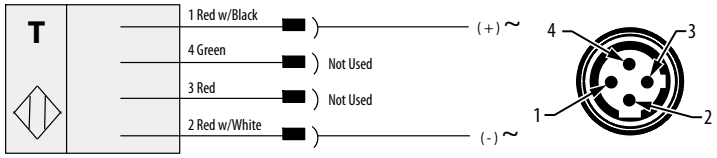

## Typical Response Curves

### Retroreflective

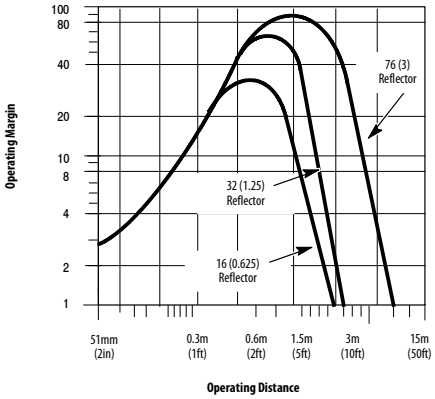


### Polarized Retroreflective

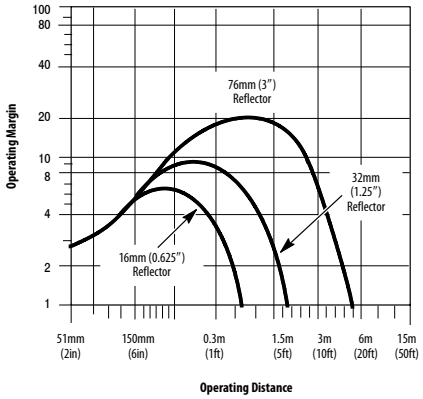


### ClearSight Clear Object Detector

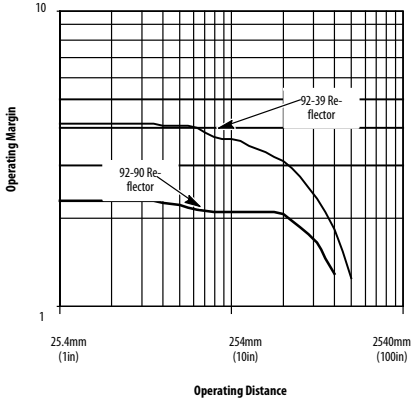


### Standard Diffuse

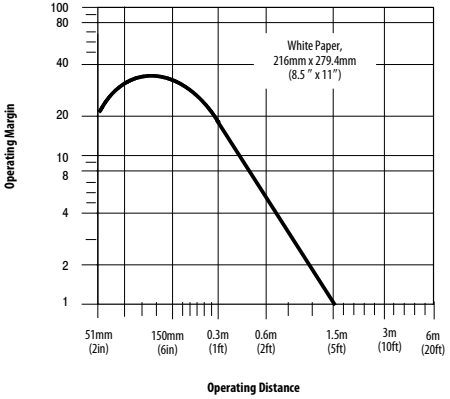


### Long Range Diffuse

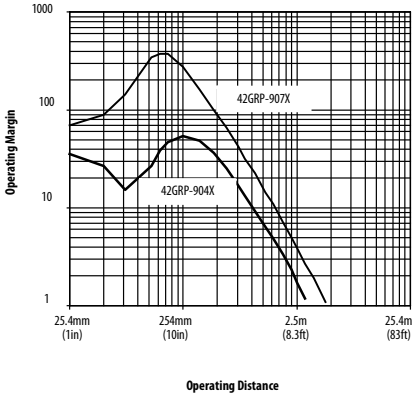


### Transmitted Beam, 61m (200ft), 152m (500ft) Light Source

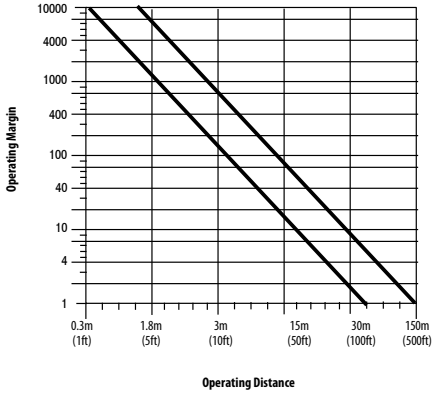


### Visible Red Fiber Optic Standard Diffuse

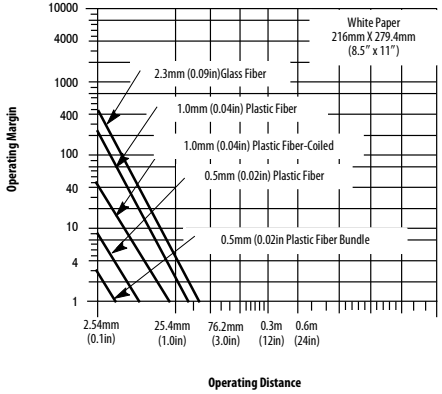


### Visible Red Fiber Optic Transmitted Beam

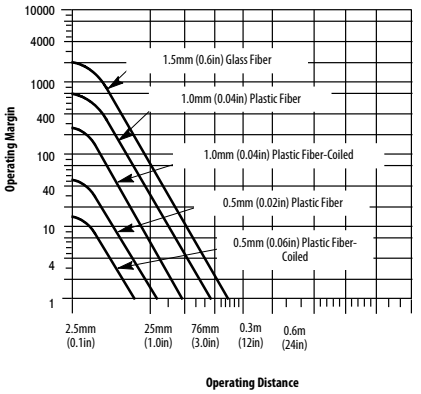


### Visible Red Fiber Optic Retroreflective

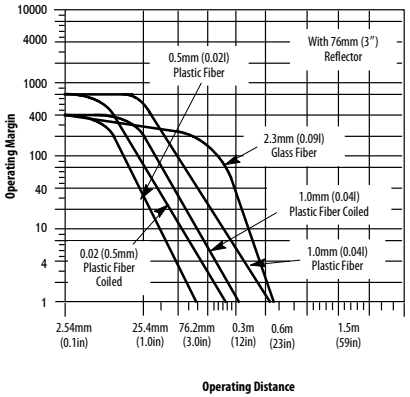


### Infrared Fiber Optic Standard Diffuse

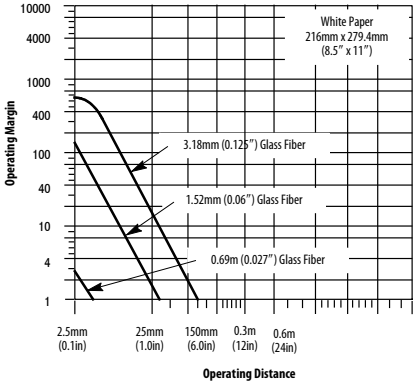


### Infrared Fiber Optic Transmitted Beam

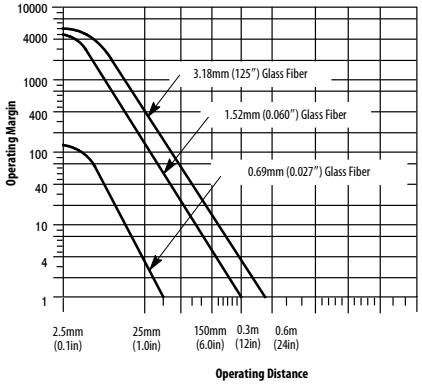


### Infrared Fiber Optic Retroreflective

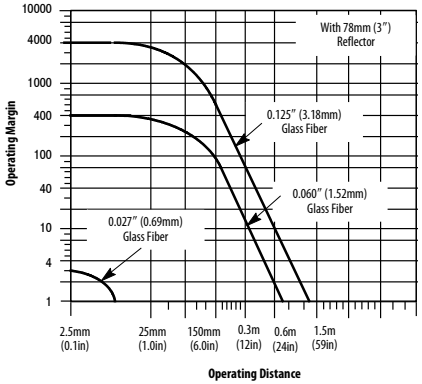

## Dimensions—mm (inches)

### All Cable Versions Except Fiber Optic

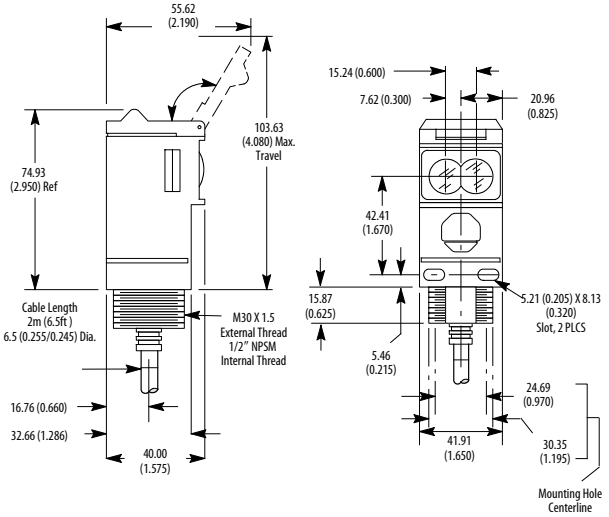


### Fiber Optic

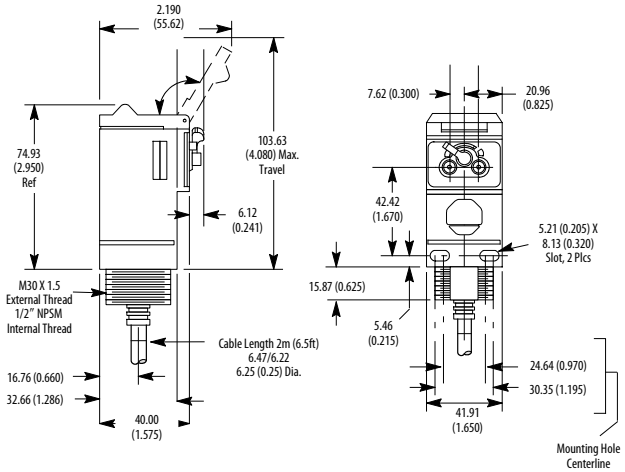


### ClearSight 9000 Versions

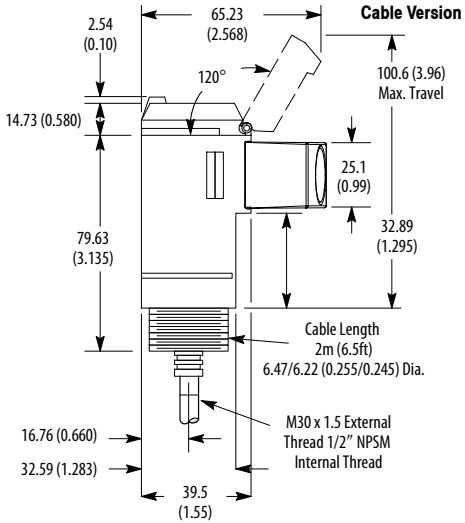


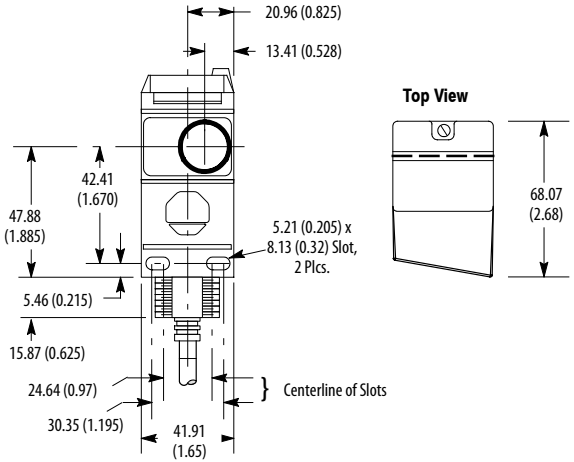





### Connector Version

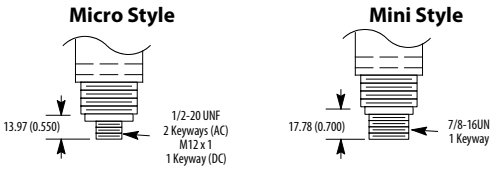

## Accessories—mm (inches)

### Swivel/Tilt Mounting Assembly #60-2439

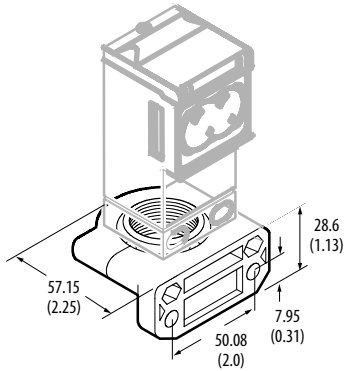


### Swivel/Tilt Mounting Assembly #60-2681 for ClearSight 9000

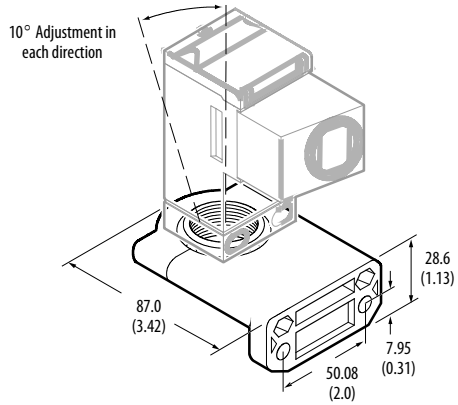


### Vertical Height Adjustment Brackets

**#60-2721** = height 4 inches

**#60-2722** = height 6 inches

**#60-2723** = height 8 inches

**#60-2724** = height 10 inches

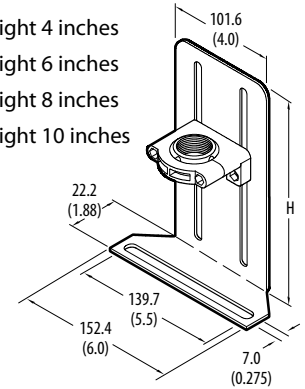


## Operational Notes

### Ambient Temperature Ratings

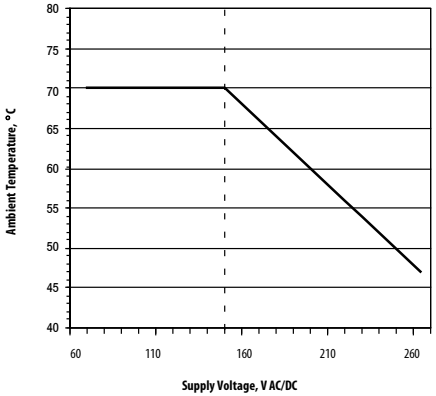


All models of the Series 9000 with the exception of those with the solid-state output (42Gxx-9xx3) and the EM-relay output (42Gxx-9xx2) have a maximum operating temperature of +70°C (+158°F). The maximum operating temperature of the 42Gxx-9xx3 and 42Gxx-9xx2 models can be determined from the graph shown above. That temperature is based on the supply voltage fed to the sensor. For example, if the operating voltage is 120V AC the maximum operating temperature would be +70°C (+158°F). An operating voltage of 220V AC would limit the ambient operating temperature to +55°C (+131°F). Operation of the sensor at ambient temperatures which exceed these limits could result in sensor failure.

### Mounting and Wiring

Securely mount the sensor on a firm, stable surface or support. A mounting which is subject to excessive vibration or shifting may cause intermittent operation. Rockwell Automation offers a wide variety of fixed and adjustable mounting brackets as well as reflectors and quick disconnect cables. Refer to *www.ab.com/sensors* for further information on these products. The sensor is supplied with the hardware kit #129-130 which contains a plastic mounting nut, lock washer, 2 M5 x 0.8 x 53 screws and nuts. Once securely mounted, the sensor may be wired as indicated in the wiring diagrams.

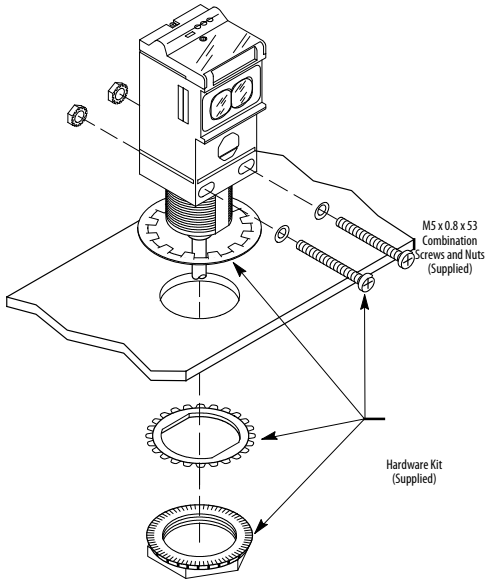

### Installing Fiber Optic Cables (42GxF-9xxx versions only)

1. Ensure that the fiber optic cable locking lever on the sensor is in the UNLOCKED position.
2. Insert the fiber optic cable until the internal clip mechanism is engaged.
3. Rotate the locking lever to the LOCK position.
4. Mount the fiber optic cable sensing tip end as appropriate.

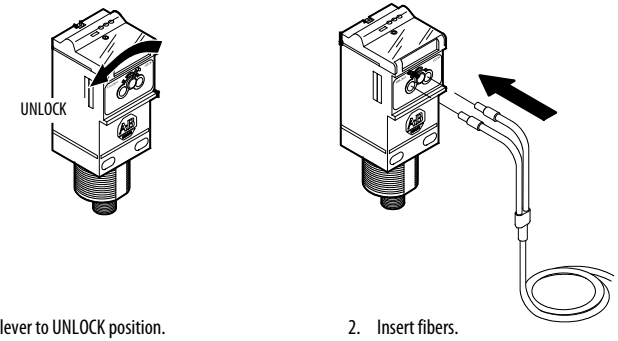


1. Set lever to UNLOCK position.
2. Insert fibers.

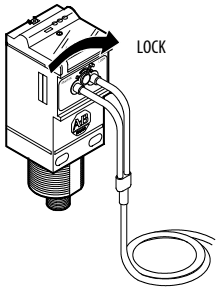


3. Rotate lever to LOCK position.

### Wiring the Sensor

The Series 9000 photoelectric sensor is available in one of three different connection types as identified on page 1. Rockwell Automation recommends the use of the 889 Series of cordsets and patchcords on the quick disconnect models. All external wiring should conform to the National Electrical Code and all applicable local codes.

## Configuring the Sensor—All models except 42GSP-9000

Use the information below to align and configure the sensor.

### User Interface

Using an instrument screwdriver, open the top cover of the sensor to gain access to the user interface panel. This panel contains a single-turn sensitivity adjustment knob, a two-position mode selector switch, along with three LED status indicators. Using the same screwdriver, the sensitivity can be increased (clockwise) or decreased (counterclockwise) to meet the application requirements. The factory default setting for all versions is maximum sensitivity.

**IMPORTANT**: Damage to single-turn sensitivity adjustment knob will occur if turned beyond min/max steps.

**IMPORTANT** After initial sensor configuration ensure that the user interface cover is closed tightly to maintain specified environmental ratings!

**42GRx—Top View Detail**

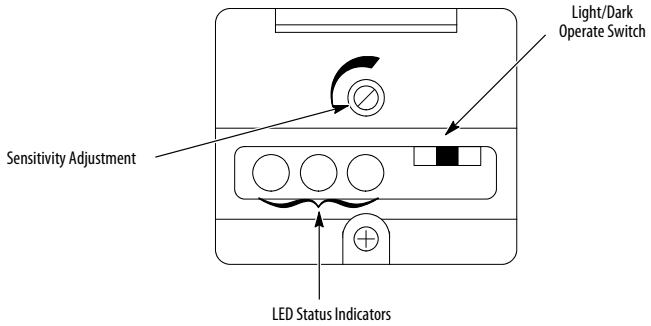


The Series 9000 photoelectric sensor also contains a two-position selector switch. This switch is used to select either light- or dark-operate mode of the sensor. In light-operate mode, the sensor output will turn ON when light is being reflected back to it (reflector for retroreflective, source for transmitted beam, or target for diffuse). In dark-operate mode, the sensor output will turn OFF when no light is being reflected back to it.

The table below describes the function of the three LED status indicators.

| Label | Color | State | Status |
|---|---|---|---|
| Output | Green | OFF | Output de-energized, SCP active |
| | | ON | Output energized |
| Margin | Red | OFF | Margin < 2.5 |
| | | ON | Margin >2.5 |
| | | Flashing | Output SCP active |
| Power | Yellow | OFF | Sensor not powered |
| | | ON | Sensor powered |

### Sensor Alignment

The red LED indicator is an alignment aid which indicates that a margin of 2.5X has been reached. This means that the sensor is receiving at least 2.5 times the signal strength back from the target needed to trigger an output signal. In general, it is desirable to have a higher margin to help overcome any deteriorating environmental conditions, i.e. dust buildup on the sensor's lens. When aligning the sensor, the best performance can be obtained if this margin indicator is illuminated with the target in place. It is recommended to leave the sensitivity at its default maximum setting and change it only when necessary.

#### Transmitted Beam Versions

1. Visually align the emitter and receiver units (emitter and receiver fibers) until the green output LED turns ON (with light-operate mode) or turns OFF (with dark-operate mode).
2. To be certain that the beam is centered, it is required to sweep the emitter or receiver in the horizontal and vertical plane and determine at what position the output indicator goes ON and then goes OFF. Set the sensor (or fiber optics) midway between both positions. The red margin LED should also be ON when the beam is unbroken.

**Retroreflective and Polarized Retroreflective Versions**

1. Visually align the sensor (or fiber optic cable) on the reflector until the green output LED turns ON (with light-operate mode) or turns OFF (with dark-operate mode). Also verify that the red margin LED is on.
2. To be certain that the beam is centered, it is required to sweep the sensor in the horizontal and vertical plane and determine at what position the output indicator goes ON and then goes OFF. Set the sensor (or fiber optics) midway between both positions.
3. Break the beam with the object to be detected and check if the output indicator turns ON (dark-operate mode). If this does not occur, turn down the sensitivity adjustment until it does. Restore the light beam by removing the object and check if the output indicator turns OFF again and that the red margin LED comes ON. If this does not occur, increase the size of the reflector or decrease the distance between the reflector and the sensor.

**Diffuse Mode**

1. Visually align the sensor (or fiber optic cable) on the object until the green output LED turns ON (with light-operate mode) or turns OFF (dark-operate mode).
2. To be certain that the beam is centered, it is required to sweep the sensor in the horizontal and vertical plane and determine at what position the output indicator goes ON and then goes OFF. Set the sensor (or fiber optics) midway between both positions.
3. Remove the object in front of the sensor and eliminate any background signals by turning down the sensitivity adjustment, if such background signals exist. Replace the object and verify that the output LED goes ON and that the margin LED is ON. If the sensor continues to pick up background reflections it will be necessary to eliminate those reflections (i.e. paint with a nonreflective color) or to replace the sensor with a background suppression, sharp cutoff diffuse, or retroreflective sensing mode version.

**Configuring the Sensor—42GSP-9000 Models**

Use the information below to align and configure the sensor.

**User Interface**

Using an instrument screwdriver, open the top cover of the sensor to gain access to the user interface panel. This panel contains two pushbuttons and three LED status indicators. The left pushbutton is used to put the sensor into teach mode while the righthand one is for light/dark operate selection.

**Teach Mode**

The teach mode of the 42GSP-9000 enables the sensor to learn both the light and dark conditions presented to it and to automatically adjust sensitivity to its optimal level for the application. This mode replaces the adjustment screw of a conventional photoelectric sensor.

With the sensor pointed at the light condition (target), momentarily press the Teach button until the RED indicator turns ON. After three seconds, this indicator will flash indicating it is ready to receive the dark condition (background). The RED indicator will momentarily remain steady, then turn OFF. This indicates that the teach operation was successful.

The 42GSP-9000 photoelectric sensor also contains a two position pushbutton. This button is used to select either light or dark operate mode of the sensor. In light operate mode, the sensor output will turn ON when light is being reflected back to it (indicated by the output LED being ON). In dark operate mode, the sensor output will turn ON when no light is being reflected back to it.

The table below describes the function of the three LED status indicators.

| Label | Color | State | Status |
|---|---|---|---|
| OUT | Yellow | OFF | Output de-energized |
| | | ON | Output energized |
| SET/SCP | Red | OFF | Normal operation |
| | | ON | Teach Mode Active present dark condition |
| | | Flashing | Teach Mode Active present light condition, Output SCP active |
| PWR/STAB | Green | OFF | Sensor not powered |
| | | ON | Sensor powered |
| | | Flashing | Unstable margin condition |

**42GSP—Top View Detail**

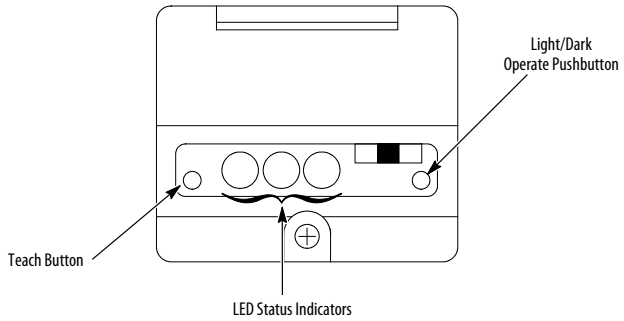


**Configuring the Sensor—42GTx Models**

In addition to the switch and knob, some versions of the Series 9000 photoelectric sensor contain a four-bank DIP switch (S1...S4) and two rotary knobs (R2 and R3). These are used to configure internal ON, OFF, and ONE-SHOT time delays making it possible to provide some degree of local control in an application.

**Timing Sensors—Top View Detail**

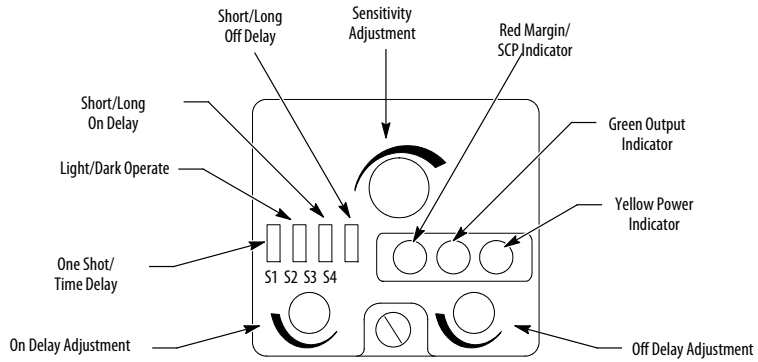


Note that these timers are nonretriggerable. The timing can be set for short (0–1.5 sec) or long (0–15 sec) duration using the DIP switches and adjusted via the two 15-turn rotary knobs. Use the illustration below to aid in configuring these timers.

**IMPORTANT**: After initial sensor configuration ensure that the user interface cover is closed tightly to maintain specified environmental ratings!

**Typical ON/OFF Timing Diffuse (Light Operate) Nonretriggerable**

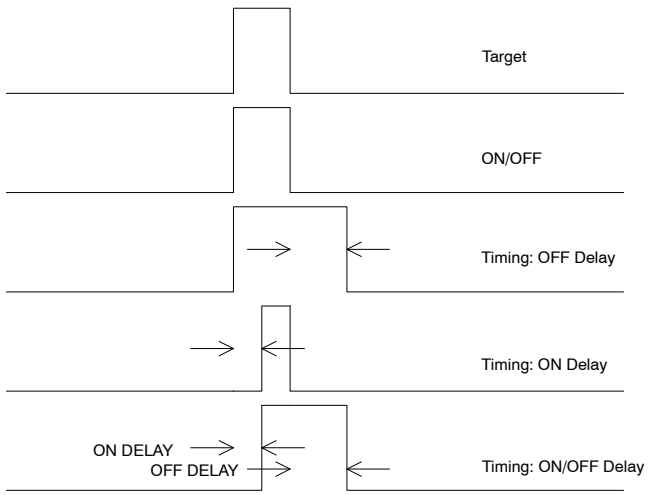


| Voltage and current ratings of the overcurrent protection to be used per UL 508: | | |
|---|---|---|
| Max. Current/Minimum Voltage Rating of Overcurrent Protection | Conductor Size | |
| | AWG | Sq. mm |
| 5 A/300V | 20 | 0.52 |
| 3 A/300V | 22 | 0.33 |
| 2 A/300V | 24 | 0.21 |
| 1 A/300V | 26 | 0.13 |
| 0.8 A/300V | 28 | 0.08 |

**Typical One-Shot Timing Diffuse (Light Operate) Nonretriggerable**

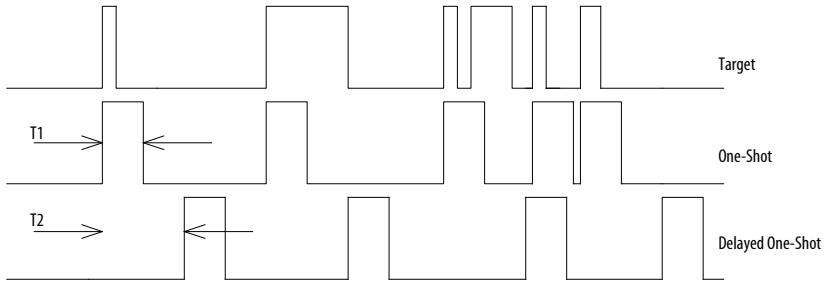


T1 is adjusted via the off delay potentiometer with either a long (0-15sec) or short (0-1.5sec) dip switch setting.

T2 is adjusted via the on delay potentiometer with either a long (0-15sec) or short (0-1.5sec) dip switch setting.

**Application Example**

Product is coming down a conveyor, if the product is a white box, a kicker located 3 seconds down the conveyor is activated to push the box down another conveyor. The kicker should extend and retract for 1 second. The sensor is a 42GTP-9000. In this application an ON and OFF delay is required. Set the first DIP switch (S1) to TD position. Switch (S2) will be set to LT position. Switch (S3) will be set to L position for a 3 second delay. Switch (S4) will be set to the
S position. The delay will be adjusted by turning the ON delay pot clockwise until the proper delay time is set. The OFF delay pot will be turned clockwise so to set the one second OFF delay.

PHOTOSWITCH, Allen-Bradley, Rockwell Software, and Rockwell Automation are trademarks of Rockwell Automation, Inc.
Trademarks not belonging to Rockwell Automation are property of their respective companies.

Rockwell Automation maintains current product environmental information on its website at http://www.rockwellautomation.com/rockwellautomation/about-us/sustainability-ethics/product-environmental-compliance.page

**www.rockwellautomation.com**

**Power, Control and Information Solutions Headquarters**

Americas: Rockwell Automation, 1201 South Second Street, Milwaukee, WI 53204-2496 USA, Tel: (1) 414.382.2000, Fax: (1) 414.382.4444
Europe/Middle East/Africa: Rockwell Automation NV, Pegasus Park, De Kleetlaan 12a, 1831 Diegem, Belgium, Tel: (32) 2 663 0600, Fax: (32) 2 663 0640
Asia Pacific: Rockwell Automation, Level 14, Core F, Cyberport 3, 100 Cyberport Road, Hong Kong, Tel: (852) 2887 4788, Fax: (852) 2508 1846

Publication 9000-IN002B-EN-P
PN-385824—10000020995 Ver 02
April 2015
Printed in USA