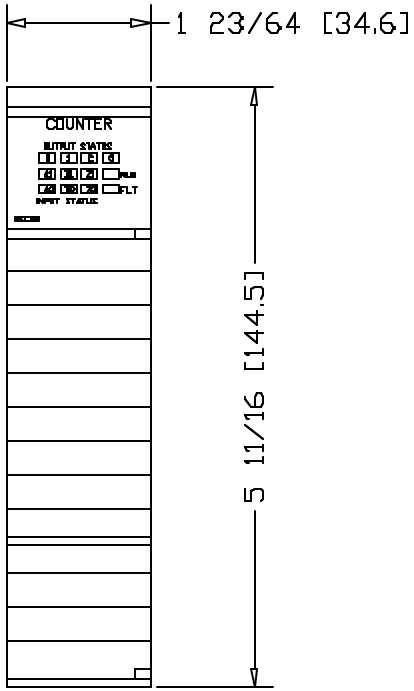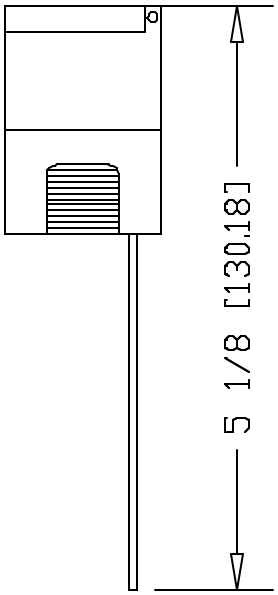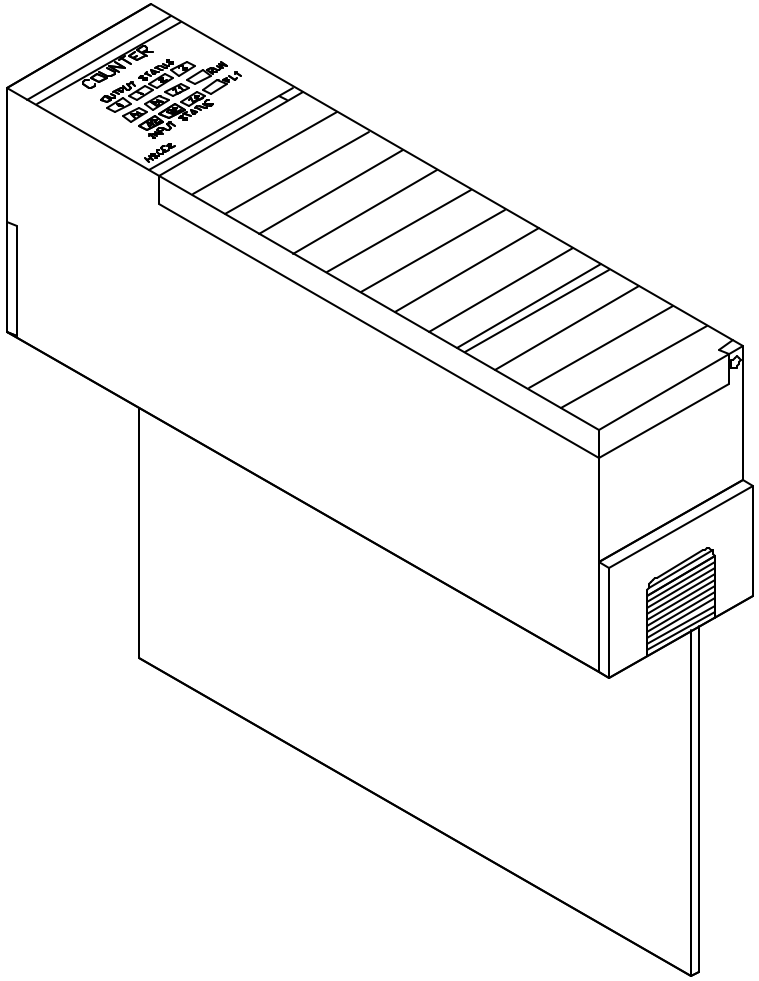1746-HSCE2
MULTI-CHANNEL HIGH SPEED COUNTER ENCODER