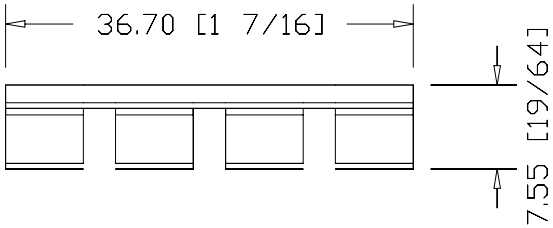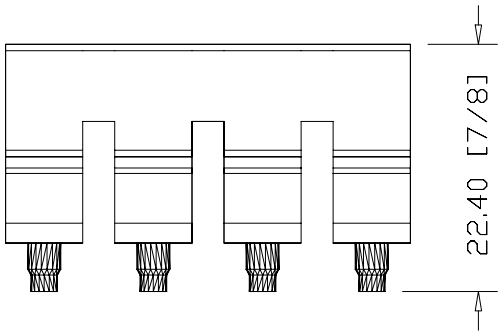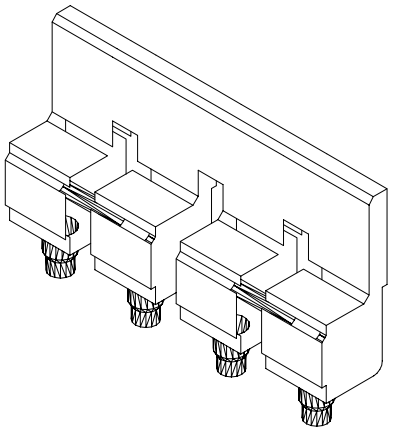1492-CJJ10-4
Screw Center Jumper