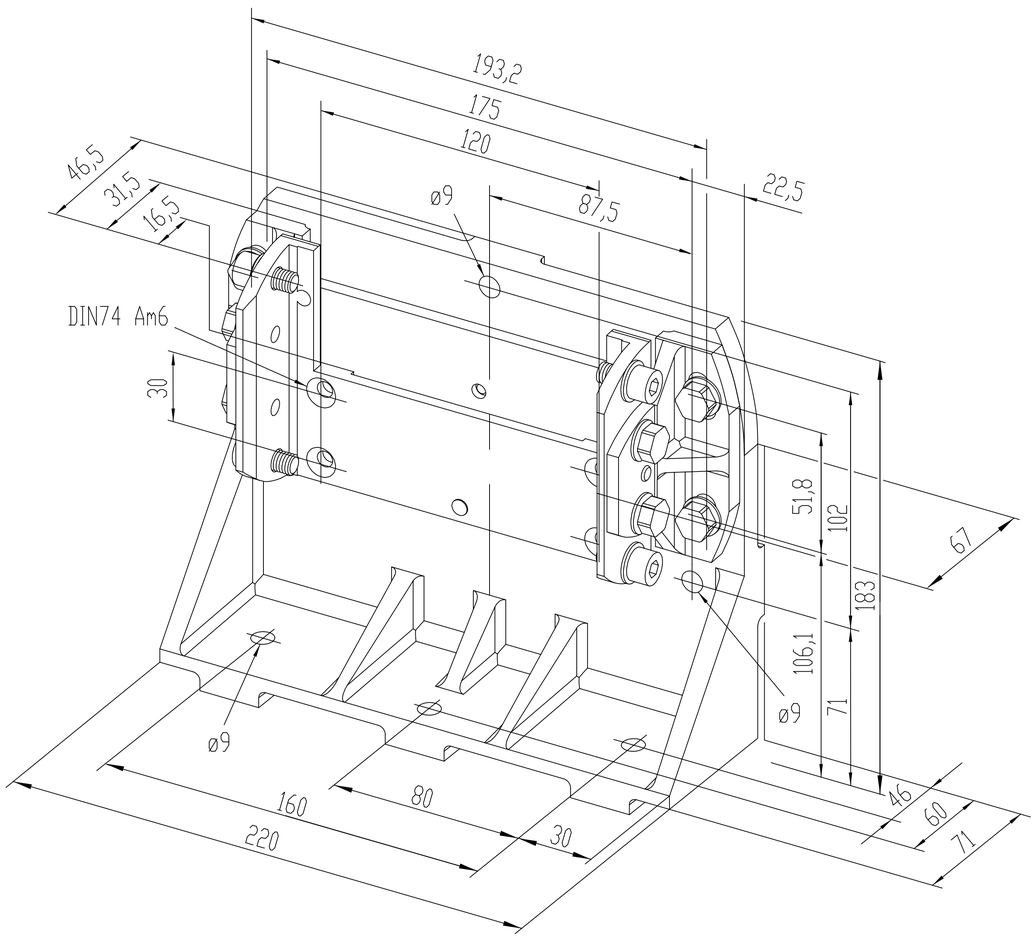

BRACKETS SHOWN ASSEMBLED

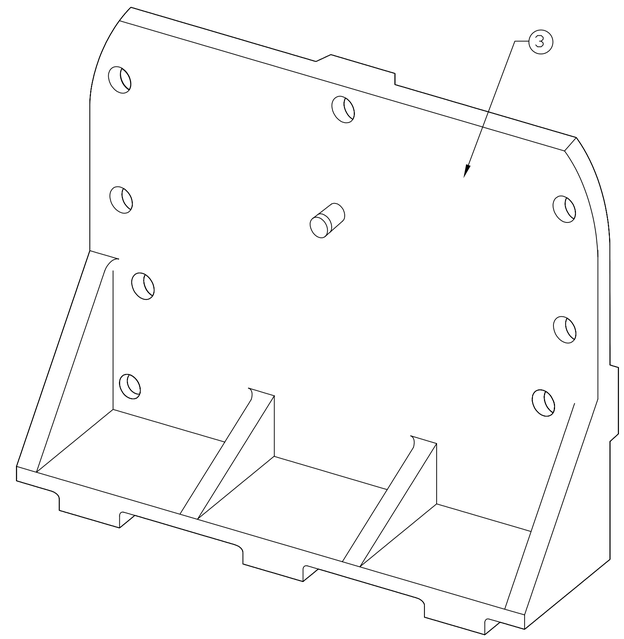

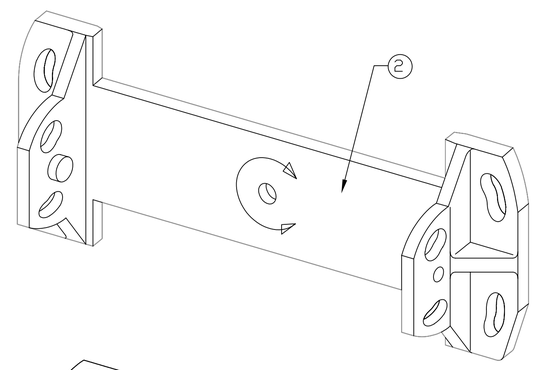

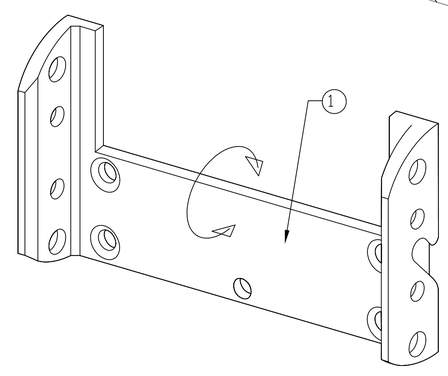

BILL OF MATERIAL

QTY								PART NO.	DESCRIPTION	ITEM
						1		SEE NOTE 1	BRACKET 1	1
					1			SEE NOTE 1	BRACKET 2	2
				1				SEE NOTE 1	BRACKET 3	3
										4
										5
										6
										7
										8
										9
										10
										11
										12
										13
										14
										15
				x	x	x		75035-410	PACKING SCHEDULE	16
										17
										18
				A	A	A	CHG LTR			
				-03	-02	-01	ASSY NO.			
				2015625	2015624	2015623	SICK/IBEO #			
				A	A	A	SERIES			
				442L-AMBSFZNMZ3	442L-AMBSFZNMZ2	442L-AMBSFZNMZ1	CATALOG			

NOTES:
1. PARTS SUPPLIED BY VENDOR.
2. EACH BRACKET SOLD SEPERATELY.
3. DIMENSIONS SHOWN ARE IN MM, AND ARE REF ONLY.
4. VENDORS NAME OR LOGO ARE NOT TO APPEAR ON THE UNIT OR PACKING.
5. HARDWARE SUPPLIED WITH EACH BRACKET, CONSISTS OF
   4 BOLTS
   4 FLATWASHERS
   4 LOCKWASHERS
   1 INSTALLATION INSTRUCTION

REVISIONS

REV.		DRAFT.
1	ECI# 0194P05	MJL
	RELEASED -01 THRU -03 @ CHG LTR A	

NEXT ASSY. | USED ON
APPLICATION

UNLESS OTHERWISE SPECIFIED
DIMENSIONS SHOWN IN MM, AND ARE ALL REF
TOLERANCES ON
FRACTIONS N/A | DECIMALS N/A | ANGLES N/A
MATERIAL SEE CHART
FINISH N/A
SCALE APPROX 1 : 1

BRACKET
SAFEZONE
MULTIZONE
LASER SCANNER

DR. M. LELIEVRE | DATE 3/22/05

ROCKWELL AUTOMATION
2 EXECUTIVE DRIVE
CHELMSFORD, MASSACHUSETTS 01824

THIS DRAWING IS PROPERTY OF THE ROCKWELL AUTOMATION AND MAY NOT COPIED, USED OR DISCLOSED FOR ANY PURPOSE EXCEPT AS AUTHORIZED IN WRITING.

DWG. NO. 75046-468 | REV. 1
SIZE D SHEET 1 OF 1