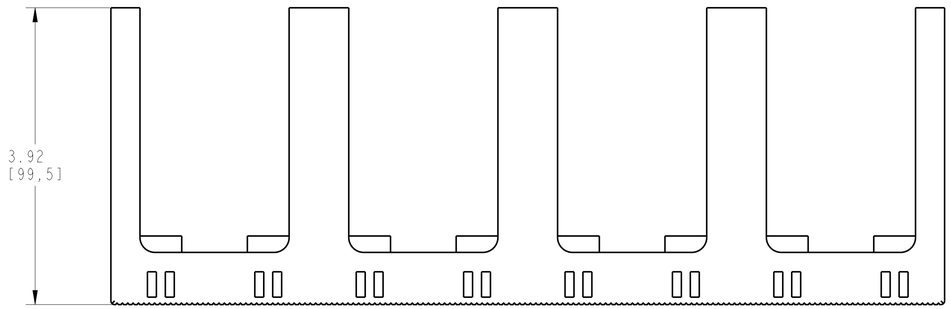

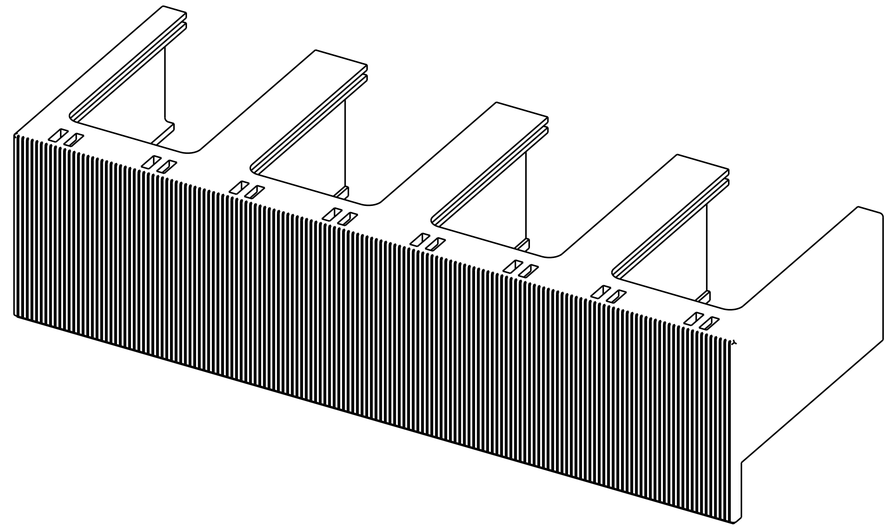

ISOMETRIC VIEW

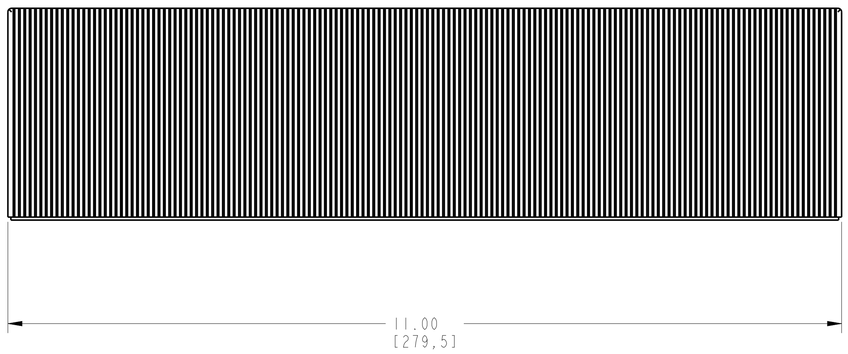

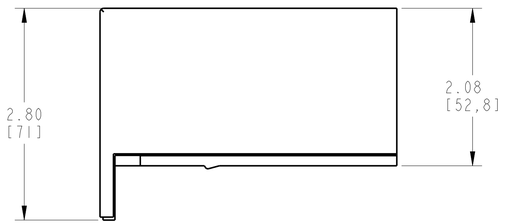

TERMINAL COVER HIGH

SCALE 1:1

Rockwell Automation

CONFIDENTIAL AND PROPRIETARY INFORMATION.
THIS DOCUMENT CONTAINS CONFIDENTIAL AND PROPRIETARY INFORMATION OF ROCKWELL AUTOMATION, INC. AND MAY NOT BE USED, COPIED OR DISCLOSED TO OTHERS, EXCEPT WITH THE AUTHORIZED WRITTEN PERMISSION OF ROCKWELL AUTOMATION, INC.

TC-HIGH FOR 140G-M-4POLE CB

Sheet 1 Of 1

Drawn by: UMUNUSW | Date: JAN-28-2014

Size D | 10000976553 | Ver 00