COMMERCIAL-GRADE

RESIDENTIAL GAS WATER HEATERS

PROLINE® XE POWER VENT

VERSATILE POWER VENT DESIGN

- All models feature an exclusive 3-position rotatable blower outlet which adds flexibility
- Combined horizontal and vertical vent runs up to 180 equivalent feet with 4" diameter venting (ABS, PVC, CPVC and polypropylene)
- All models are equipped with a protected sensor that detects the presence of flammable vapors and automatically disables the burner to prevent ignition
- Air intake snorkel elevates the inlet location of combustion air to prevent flammable vapors from entering the sealed combustion chamber
- Reduced NOx emissions comply with air quality management district regulations
- Built-in heat traps on the water inlet and outlet reduce the amount of heat lost through piping
- 2-inch thick, "Environmentally-Friendly" foam insulation reduces the amount of heat loss and contributes to overall energy efficiency

SELF-CLEANING DIP TUBE

- Reduces lime and sediment buildup and maximizes hot water output. Made from long-lasting PEX cross-linked polymer.

HOT-SURFACE IGNITOR

- More robust and reliable than standing pilot, and reduces energy consumption

BLUE DIAMOND® GLASS COATING

- Provides superior corrosion resistance compared to industry standard glass lining

USER-FRIENDLY

- State-of-the-art electronic gas control provides more precise temperature control
- LED control light displays operation status and diagnostics information

ENHANCED-FLOW BRASS DRAIN VALVE

- Our residential water heaters have a solid brass, tamper resistant, enhanced-flow, ball type, drain valve.
- Uses a standard female hose fitting that allows for fast and easy draining during maintenance.
- Designed for easy operation, this valve includes an integral screwdriver slot that features a ¼ turn (open/close) radius, which not only permits full straight-through water flow but also a quick and positive shut off.

AVAILABLE IN NATURAL GAS AND PROPANE

DESIGN-CERTIFIED BY CSA INTERNATIONAL

- Certified at 150 psi working pressure
- Certified to ANSI Z21.10.1 - CSA 4.1 or ANSI Z21.10.3 - CSA 4.3 standards governing storage tank-type water heaters.
- **6-YEAR LIMITED TANK AND PARTS WARRANTY**
- For complete information, consult written warranty or visit statewaterheaters.com

Low Lead Content

SOLID. STATE.

© April 2023 State Water Heaters. All rights reserved.

COMMERCIAL-GRADE

RESIDENTIAL GAS WATER HEATERS

Model Number	Series	Nominal Capacity	Rated Storage Volume	UEF	Recovery @ 90°F Rise Gallon Per Hour	BTU Input Gallon Per Hour	First Hour Rating (Gallons)	Dimensions in Inches								Approx. Shipping Weight (lbs)
								A	B	C	D	E	F	G	H	
GS6 40 YBVIS	200	40	38	0.67	45	40,000	73	59	49-5/8	22	29-1/8	11	13-1/4	42-1/2	N/A	174
GS6 40 YRVIT	200	40	38	0.70	56	50,000	87	68-1/2	59-1/4	20	27-1/8	11	13-1/4	53-1/8	15-1/4	176
GS6 50 YBVIS	200	50	49	0.72	45	40,000	79	60-1/8	50-3/4	24	31-1/8	11	13-1/4	43-3/4	N/A	198
GS6 50 YRVIT	200	50	48	0.72	56	50,000	97	68-1/8	58-3/4	22	29-1/8	11	13-1/4	51-3/4	15-1/4	192
GS6 50 YRVHSL	200	50	50	0.73	69	62,000	119	61-1/8	52	24	31-1/8	11	13-1/4	44-1/2	15-1/4	212
GS6 75 YRVHTL	310	75	72	0.69	80	76,000	116	70-5/8	61-1/4	26	33-1/8	11	13-1/4	53	15-1/4	277

All models have ¾" NPT water connections.
Side loop fittings standard on YRVHSL and YRVHTL models.
Side loop fittings available on YRVIT models. Add "L" to the model number (example GS6 40 YRVITL).
Natural gas models cited are series 200/210. Propane models are series 201/211. When ordering propane gas, change "Y" to "H" in the model number (example GS6 40 HBVIS).
All models rated for installation at altitudes up to 10,100 ft.

VENT LENGTH

Model Number	Maximum Vent Length Eq. ft.		
	2"	3"	4"
GS6 40 YBVIS	50'	125'	180'
GS6 40 YRVIT	50'	125'	180'
GS6 50 YBVIS	50'	125'	180'
GS6 50 YRVIT	50'	125'	180'
GS6 50 YRVHSL	N/A	50'	125'
GS6 75 YRVHTL	N/A	50'	125'

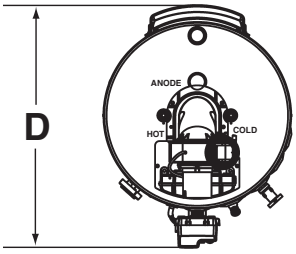

Three Position Rotatable Blower

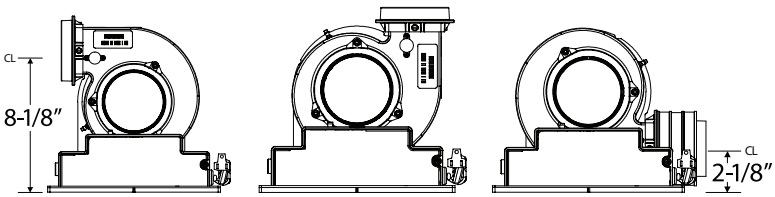

LEFT UP (Standard) RIGHT

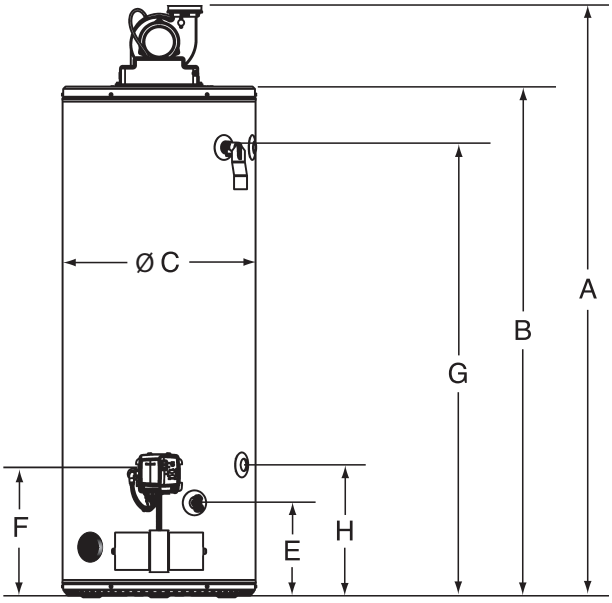

FOR MORE INFORMATION CONTACT: STATE WATER HEATERS 500 TENNESSEE WALTZ PARKWAY, ASHLAND CITY, TN 37015 • 800-365-0024 TOLL-FREE USA • STATEWATERHEATERS.COM

© April 2023 State Water Heaters. All rights reserved.