Instruction Manual

COMMERCIAL GAS WATER HEATERS

www.statewaterheaters.com
500 Tennessee Waltz Parkway
Ashland City, TN 37015
Technical Support 800-365-0024
Parts 800-821-2017

GAS-FIRED UL LISTED

CLASSIFIED UL WATER QUALITY ANSI/NSF-5

ASME HLW

CSA LOW LEAD CONTENT

MODELS
SUF 60120 THRU SUF 100250
SERIES 300 & 301

INSTALLATION - OPERATION - SERVICE - MAINTENANCE - LIMITED WARRANTY

AHRI CERTIFIED® www.ahridirectory.org

This model is iCOMM COMPATIBLE. iCOMM For info call: 1-888-WATER02

WARNING: If the information in these instructions is not followed exactly, a fire or explosion may result causing property damage, personal injury or death.

— **Do not store or use gasoline or other flammable vapors and liquids in the vicinity of this or any other appliance.**

— **WHAT TO DO IF YOU SMELL GAS:**

- **Do not try to light any appliance.**
- **Do not touch any electrical switch; do not use any phone in your building.**
- **Immediately call your gas supplier from a neighbor's phone. Follow the gas supplier's instructions.**
- **If you cannot reach your gas supplier, call the fire department.**

— **Installation and service must be performed by a qualified installer, service agency or the gas supplier.**

Thank you for buying this energy efficient water heater. We appreciate your confidence in our products.

⚠ WARNING

Read and understand this instruction manual and the safety messages herein before installing, operating or servicing this water heater.

Failure to follow these instructions and safety messages could result in death or serious injury.

This manual must remain with the water heater.

PLACE THESE INSTRUCTIONS ADJACENT TO HEATER AND NOTIFY OWNER TO KEEP FOR FUTURE REFERENCE.

PRINTED 0217

100224322

TABLE OF CONTENTS

SAFE INSTALLATION, USE AND SERVICE 3
APPROVALS 3
GENERAL SAFETY INFORMATION 4
- Precautions 4
- Grounding Instructions 4
- Hydrogen Gas Flammable 4

INTRODUCTION 6
- Abbreviations Used 6
- Qualifications 6
- iCOMM™ and BMS/EMS Compatibility 6
- Preparing For The Installation 6

FEATURES AND COMPONENTS 7
- Basic Operation 7
- Modulation 7
- Blower/Burner Assembly Detail 7
- Top View 8
- Side Views 9

INSTALLATION CONSIDERATIONS 10
- Rough In Dimensions 10
- Locating The Water Heater 11
- Extended Vent Terminations 12
- Optional Direct Vent Terminations 12
- Hard Water 12
- Circulation Pumps 12
- Insulation Blankets 12

INSTALLATION REQUIREMENTS 13
- Gas Supply Systems 13
- Supply Gas Regulator 13
- Power Supply 13
- Mixing Valves 14
- Dishwashing Machines 14
- Closed Water Systems 14
- Thermal Expansion 14
- Temperature-Pressure Relief Valve 15
- Condensate Drain 16
- Combustible Material Storage 16
- Contaminated Air 16
- Air Requirements 17
- Unconfined Space 17
- Confined Space 17
- Fresh Air Openings For Confined Spaces 18
- Outdoor Air Through Two Openings 18
- Outdoor Air Through One Opening 18
- Outdoor Air Through Two Horizontal Ducts 18
- Outdoor Air Through Two Vertical Ducts 19
- Air From Other Indoor Spaces 19

INSTALLATION REQUIREMENTS - COMMONWEALTH OF MASSACHUSETTS 20

VENTING INSTALLATION 21
- General Venting Information 21
- General Venting Instructions 21
- Intake Air Connection 22
- Venting Requirements 22
- Common Venting 23
- Venting Installation Sequence 23
- Power Vent Installation 23
- Direct Vent Installation 24
- Direct Vent Air Intake Moisture Protection 25
- Vertical Termination Installation 25
- Sidewall Termination Installation 27
- Polypropylene Installations 28
- AL29-4C® Vent Installations 29
- Common Venting 29
- Concentric Termination Installation 30
- 4 Inch Concentric Termination Installation 31
- Low Profile Vent Installation 34
- Venting Arrangements 35
- Termination Clearances Sidewall Power Vent 37
- Termination Clearances Sidewall Direct Vent 38

WATER HEATER INSTALLATION 39
- Condensate Drain Installation 39
- Supply Gas Line Installation 40
- Gas Line Leak Testing 41
- Purging 41
- Electrical Wiring 41
- Enable / Disable Circuit (For Building Management Systems) 42
- Water Line Connections 43
- T&P Valve Discharge Pipe 43

TEMPERATURE REGULATION 44
- High Temperature Limit Control (ECO) 44
- Thermostat Control 44

CONTROL SYSTEM OPERATION 45
- Overview 45
- Control System Navigation 45
- User Settings & Control System Menus 48

START UP 53
- Prior to Start up 53
- Initial Start Up 53
- Lighting the Water Heater 54
- Checking The Firing Rate 56
- High Altitude Installations 56

TROUBLESHOOTING 57
- Installation Checklist 57
- Sequence Of Operation 57
- Sequence Of Operation Flow Chart 58
- Operational Problems 59
- Fault And Alert Conditions 60

MAINTENANCE 63
- General 63
- Maintenance Schedule 63
- Draining And Flushing 63
- Filling The Water Heater 64
- Sediment Removal 64
- Lime Scale Removal 64
- Powered Anode Rods 65
- Drain Valve and Access Panels 65
- Vent System 65

DIAGRAMS 66
- CCB - Central Control Board Layout 66
- Wiring Diagram 67
- Circulation Pump Wiring Diagrams 68
- Water Piping Diagrams 69

NOTES 76
WARRANTY 79

SAFE INSTALLATION, USE AND SERVICE

The proper installation, use and servicing of this water heater is extremely important to your safety and the safety of others.

Many safety-related messages and instructions have been provided in this manual and on your own water heater to warn you and others of a potential injury hazard. Read and obey all safety messages and instructions throughout this manual. It is very important that the meaning of each safety message is understood by you and others who install, use, or service this water heater.

⚠	This is the safety alert symbol. It is used to alert you to potential personal injury hazards. Obey all safety messages that follow this symbol to avoid possible injury or death.

⚠ DANGER	DANGER indicates an imminently hazardous situation which, if not avoided, will result in injury or death.
⚠ WARNING	WARNING indicates a potentially hazardous situation which, if not avoided, could result in injury or death.
⚠ CAUTION	CAUTION indicates a potentially hazardous situation which, if not avoided, could result in minor or moderate injury.
CAUTION	CAUTION used without the safety alert symbol indicates a potentially hazardous situation which, if not avoided, could result in property damage.

All safety messages will generally tell you about the type of hazard, what can happen if you do not follow the safety message, and how to avoid the risk of injury.

APPROVALS

ASME HLW

CLASSIFIED UL WATER QUALITY

GAS-FIRED UL LISTED

AHRI CERTIFIED® www.ahridirectory.org

Low Lead Content

NOTE: ASME construction is optional on the water heaters covered in this manual.

GENERAL SAFETY INFORMATION

PRECAUTIONS

DO NOT USE THIS WATER HEATER IF ANY PART HAS BEEN EXPOSED TO FLOODING OR WATER DAMAGE. Immediately call a qualified service agency to inspect the water heater and to make a determination on what steps should be taken next.

If the unit is exposed to the following, do not operate heater until all corrective steps have been made by a qualified service agency.

1. External fire.
2. Damage.
3. Firing without water.

GROUNDING INSTRUCTIONS

This water heater must be grounded in accordance with the National Electrical Code and/or local codes. These must be followed in all cases. Failure to ground this water heater properly may also cause erratic control system operation.

This water heater must be connected to a grounded metal, permanent wiring system; or an equipment grounding conductor must be run with the circuit conductors and connected to the equipment grounding terminal or lead on the water heater.

HYDROGEN GAS FLAMMABLE

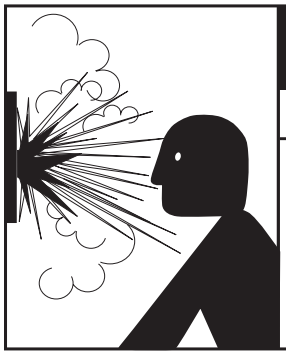

⚠ WARNING

Explosion Hazard

- Flammable hydrogen gases may be present.
- Keep all ignition sources away from faucet when turning on hot water.

Hydrogen gas can be produced in a hot water system served by this water heater that has not been used for a long period of time (generally two weeks or more). Hydrogen gas is extremely flammable. To reduce the risk of injury under these conditions, it is recommended that a hot water faucet served by this water heater be opened for several minutes before using any electrical appliance connected to the hot water system. If hydrogen is present there will probably be an unusual sound such as air escaping through the pipe as the water begins to flow. THERE SHOULD BE NO SMOKING OR OPEN FLAME NEAR THE FAUCET AT THE TIME IT IS OPEN.

Verify the power to the water heater is turned off before performing any service procedures. The Enable /Disable switch on front panel disables the 24 volt gas valve. Electrical supply must be turned off at circuit breaker serving water heater.

⚠ WARNING

Read and understand this instruction manual and the safety messages herein before installing, operating or servicing this water heater.

Failure to follow these instructions and safety messages could result in death or serious injury.

This manual must remain with the water heater.

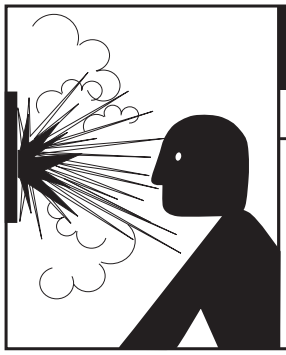

⚠ WARNING

Explosion Hazard

- Overheated water can cause water tank explosion.
- Properly sized temperature and pressure relief valve must be installed in the opening provided.

⚠ DANGER

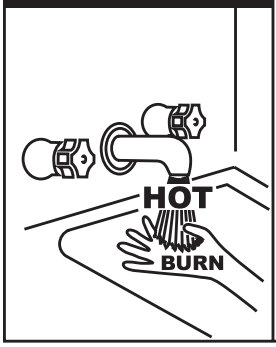

Water temperature over 125°F (52°C) can cause severe burns instantly resulting in severe injury or death.

Children, the elderly and the physically or mentally disabled are at highest risk for scald injury.

Feel water before bathing or showering.

Temperature limiting devices such as mixing valves must be installed when required by codes and to ensure safe temperatures at fixtures.

CAUTION

Improper installation, use and service may result in property damage.

- Do not operate water heater if exposed to flooding or water damage.
- Inspect anode rods regularly, replace if damaged.
- Install in location with drainage.
- Fill tank with water before operation.
- Properly sized thermal expansion tanks are required on all closed water systems.

Refer to this manual for installation and service.

GENERAL SAFETY INFORMATION

⚠ WARNING

Fire or Explosion Hazard

- Do not store or use gasoline or other flammable vapors and liquids in the vicinity of this or any other appliance.
- Avoid all ignition sources if you smell gas.
- Do not expose water heater controls to excessive gas pressure.
- Use only the gas shown on the water heater rating label.
- Maintain required clearances to combustibles.
- Keep ignition sources away from faucets after extended periods of non-use.

Read instruction manual before installing, using or servicing water heater.

⚠ WARNING

Breathing Hazard - Carbon Monoxide Gas

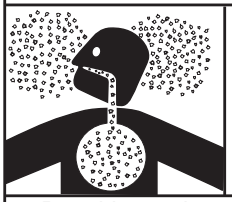

- Do not obstruct water heater air intake with insulating blanket.
- Gas and carbon monoxide detectors are available.
- Install water heater in accordance with the instruction manual.

Breathing carbon monoxide can cause brain damage or death. Always read and understand instruction manual.

CAUTION

Property Damage Hazard

- All water heaters eventually leak.
- Do not install without adequate drainage.

⚠ WARNING

Electrical Shock Hazard

- Turn off power at the branch circuit breaker serving the water heater before performing any service.
- Label all wires prior to disconnecting when performing service. Wiring errors can cause improper and dangerous operation.
- Verify proper operation after servicing.
- Failure to follow these instructions can result in personal injury or death.

⚠ WARNING

Fire Hazard

For continued protection against risk of fire:

- Do not install water heater on carpeted floor.
- Do not operate water heater if exposed to flooding or water damage.

⚠ WARNING

Fire and Explosion Hazard

- Use joint compound or Teflon tape compatible with propane gas.
- Leak test gas connections before placing water heater in operation.
- Disconnect gas piping at main gas shutoff valve before leak testing heater.
- Install sediment trap in accordance with NFPA 54 or CAN/CSA B149.1.

⚠ WARNING

Fire and Explosion Hazard

- Do not use water heater with any gas other than the gas shown on the rating label.
- Excessive gas pressure to gas valve can cause serious injury or death.
- Turn off gas lines during installation.
- Contact a qualified installer or service agency for installation and service.

⚠ WARNING

Jumping out control circuits or components can result in property damage, personal injury or death.

- Service should only be performed by a qualified service technician using proper test equipment.
- Altering the water heater controls and/or wiring in any way could result in permanent damage to the controls or water heater and is not covered under the limited warranty.

Any bypass or alteration of the water heater controls and/or wiring will result in voiding the appliance warranty.

INTRODUCTION

Thank You for purchasing this water heater. Properly installed and maintained, it should give you years of trouble free service.

ABBREVIATIONS USED

Abbreviations found in this Instruction Manual include :

- ANSI - American National Standards Institute
- ASME - American Society of Mechanical Engineers
- AHRI - Air Conditioning, Heating and Refrigeration Institute
- NEC - National Electrical Code
- NFPA - National Fire Protection Association
- UL - Underwriters Laboratory
- CSA - Canadian Standards Association

QUALIFICATIONS

QUALIFIED INSTALLER OR SERVICE AGENCY

Installation and service of this water heater requires ability equivalent to that of a Qualified Agency (as defined by ANSI below) in the field involved. Installation skills such as plumbing, air supply, venting, gas supply and electrical supply are required in addition to electrical testing skills when performing service.

ANSI Z223.1 2006 Sec. 3.3.83: “Qualified Agency” - “Any individual, firm, corporation or company that either in person or through a representative is engaged in and is responsible for (a) the installation, testing or replacement of gas piping or (b) the connection, installation, testing, repair or servicing of appliances and equipment; that is experienced in such work; that is familiar with all precautions required; and that has complied with all the requirements of the authority having jurisdiction.”

If you are not qualified (as defined by ANSI above) and licensed or certified as required by the authority having jurisdiction to perform a given task do not attempt to perform any of the procedures described in this manual. If you do not understand the instructions given in this manual do not attempt to perform any procedures outlined in this manual.

ICOMM AND BMS/EMS COMPATIBLITY

iCOMM™

This water heater is compatible with the iCOMM™ remote monitoring system. The iCOMM™ system hardware is purchased separately and allows users to monitor critical water heater operations and diagnose issues by using the manufacture’s water heater app (available for IOS and Android).

The iCOMM™ system can automatically notify selected personnel via email and or cellular phone text messages if operational problems or user defined Alert conditions should occur. The system is expandable to meet the needs of multiple heaters and groups of heaters.

ICC

This water heater is connectable to BACnet or Modbus compliant Supervisory controls via the ICC BMS Gateway. This allows connection of the water heater to local Building Management Systems using Serial RS-485 (MS/TP) or IP connections.

To order or to find out more about iCOMM™ or ICC devices, logon to the manufacturer’s website at http://www.hotwater.com/ or call 888-928-3702 (888-WATER02) for more information.

PREPARING FOR THE INSTALLATION

1. Read the entire manual before attempting to install or operate the water heater. Pay close attention to the General Safety Information on page 4 and 5. If you don’t follow the safety rules, the water heater may not operate safely. It could cause property damage, injury and/or death.

   This manual contains instructions for the installation, operation, and maintenance of the water heater. It also contains warnings throughout the manual that you must read and be aware of. All warnings and all instructions are essential to the proper operation of the water heater and your safety.

   Detailed installation diagrams are also found in this manual. These diagrams will serve to provide the installer with a reference. It is essential that all venting, water piping, gas piping and wiring be installed as shown.

   Particular attention should be given to the installation of thermometers at the locations indicated in the piping diagrams as these are necessary for checking the operation of the water heater.

   The principal components of the water heater are identified in Features And Components on page 7 in this manual. Use this reference to locate and identify various components on the water heater.

   See the Installation Checklist and Troubleshooting on page 57. By using this checklist the user may be able to make minor operational adjustments and avoid unnecessary service calls. However, service and diagnostic procedures should only be performed by a Qualified Service Agency.

   NOTE: Costs to correct installation errors are not covered under the limited warranty.

2. Be sure to turn off power when working on or near the electrical system of the water heater. Never touch electrical components with wet hands or when standing in water.

3. The installation must conform to all instructions contained in this manual and the local code authority having jurisdiction. These shall be carefully followed in all cases. Authorities having jurisdiction should be consulted before installation begins if there are any questions regarding compliance with local, state or national codes.

   In the absence of local codes, the installation must comply with the current editions of the National Fuel Gas Code, ANSI Z223.1/NFPA 54 and the National Electrical Code, NFPA 70 or CAN/CSA-B149.1, the Natural Gas and Propane Installation Code and CSA C22.1, the Canadian Electrical Code. All documents are available from the Canadian Standards Association, 8501 East Pleasant Valley Road, Cleveland, OH 44131. NFPA documents are also available from the National Fire Protection Association, 1 Batterymarch Park, Quincy, MA 02269.

4. If after reading this manual you have any questions or do not understand any portion of the instructions, call the toll free number on the back cover of this manual for technical assistance. In order to expedite your request, please have the full Model, Serial and Series number of the water heater you are working with available for the technician. This information is located on the water heater’s rating label.

5. Carefully plan the placement of the water heater. Examine the location to ensure that it complies with the requirements in Locating The Water Heater on page 11 and the Rough In Dimensions on page 10.

6. For installation in California this water heater must be braced or anchored to avoid falling or moving during an earthquake. See instructions for correct installation procedures. Instructions may be obtained from California Office of the State Architect, 1102 Q Street, Suite 5100, Sacramento, CA 95811.

7. Massachusetts Code requires this water heater to be installed in accordance with Massachusetts 248-CMR 2.00: State Plumbing Code and 248-CMR 5. See Commonwealth of Massachusetts on page 20.

FEATURES AND COMPONENTS

BASIC OPERATION

The water heaters covered in this manual have a helical coil shaped heat exchanger that is submerged in the storage tank. The water heater's Main Burner is a radial design burner, it is mounted on the top and fires downward through the heat exchanger. This is a forced draft burner; hot burning gases are forced through the heat exchanger under pressure and exit through the exhaust/vent connection located at the bottom of the water heater. See Figure 1 and Figure 2.

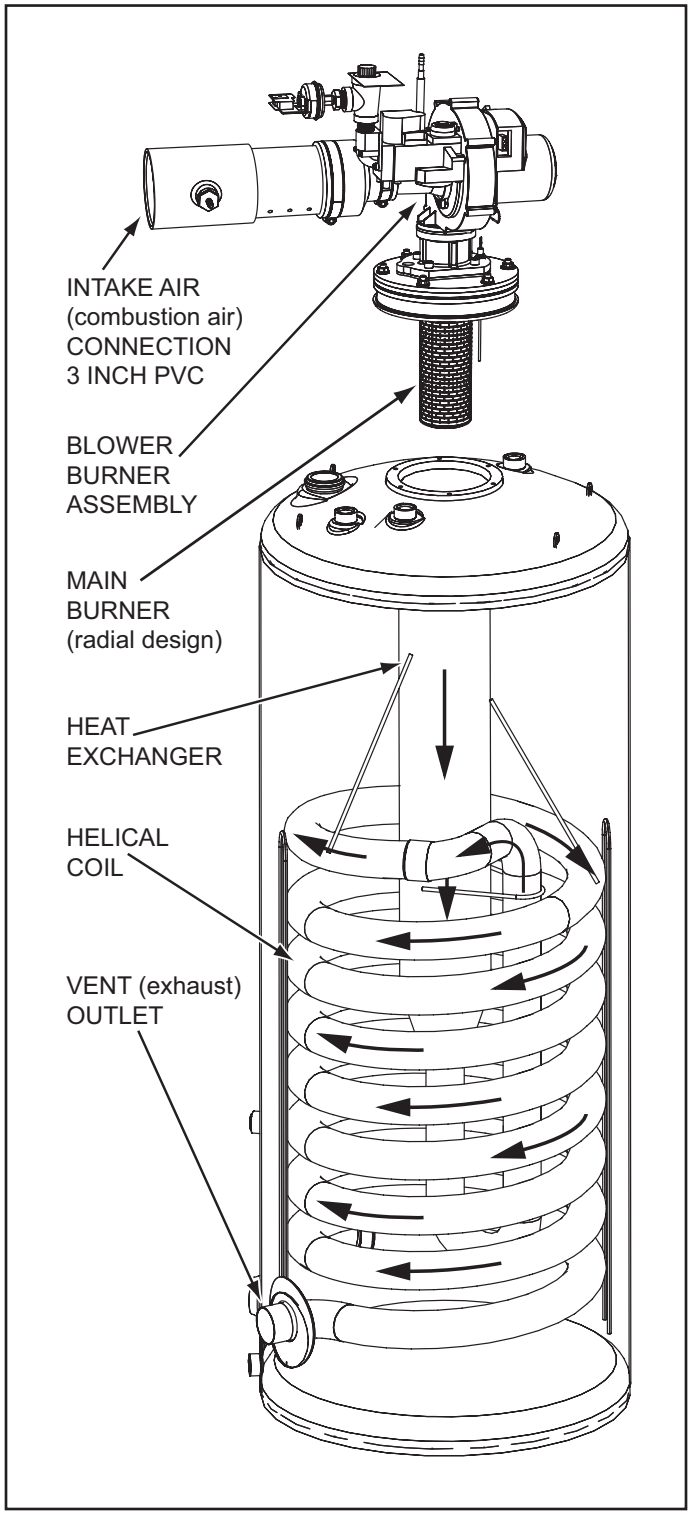

Figure 1

MODULATION

The water heaters covered by this manual are capable of modulating their firing rate. The CCB monitors the water temperature in the tank and regulates the firing rate to achieve the target temperature setpoint. The firing rate is dictated by the hot water draw, proximity to the tank temperature setpoint, and various other temperature limitations.

BLOWER/BURNER ASSEMBLY DETAIL

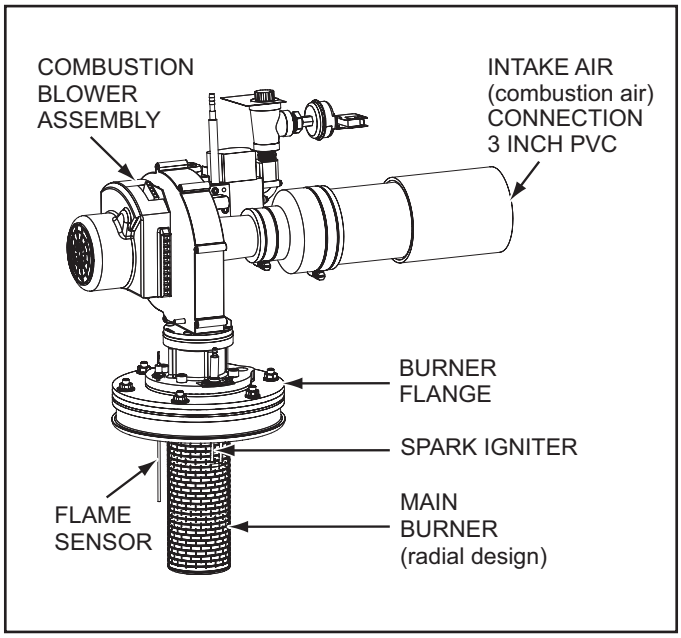

Figure 2

Spark Igniter

The control system energizes the spark ignition transformer with 120 VAC during the ignition cycle. The spark ignition transformer then sends a high-voltage current to the spark igniter which in turn ignites the main burner air/gas mixture.

Flame Sensor

The control system also monitors the flame sensor to confirm a flame is present at the Main Burner. If a flame is not verified during the ignition trial period (3-5 seconds) the control system will immediately de-energize the 24 Volt Gas Valve. See the Sequence Of Operation Flow Chart on page 58.

TOP VIEW

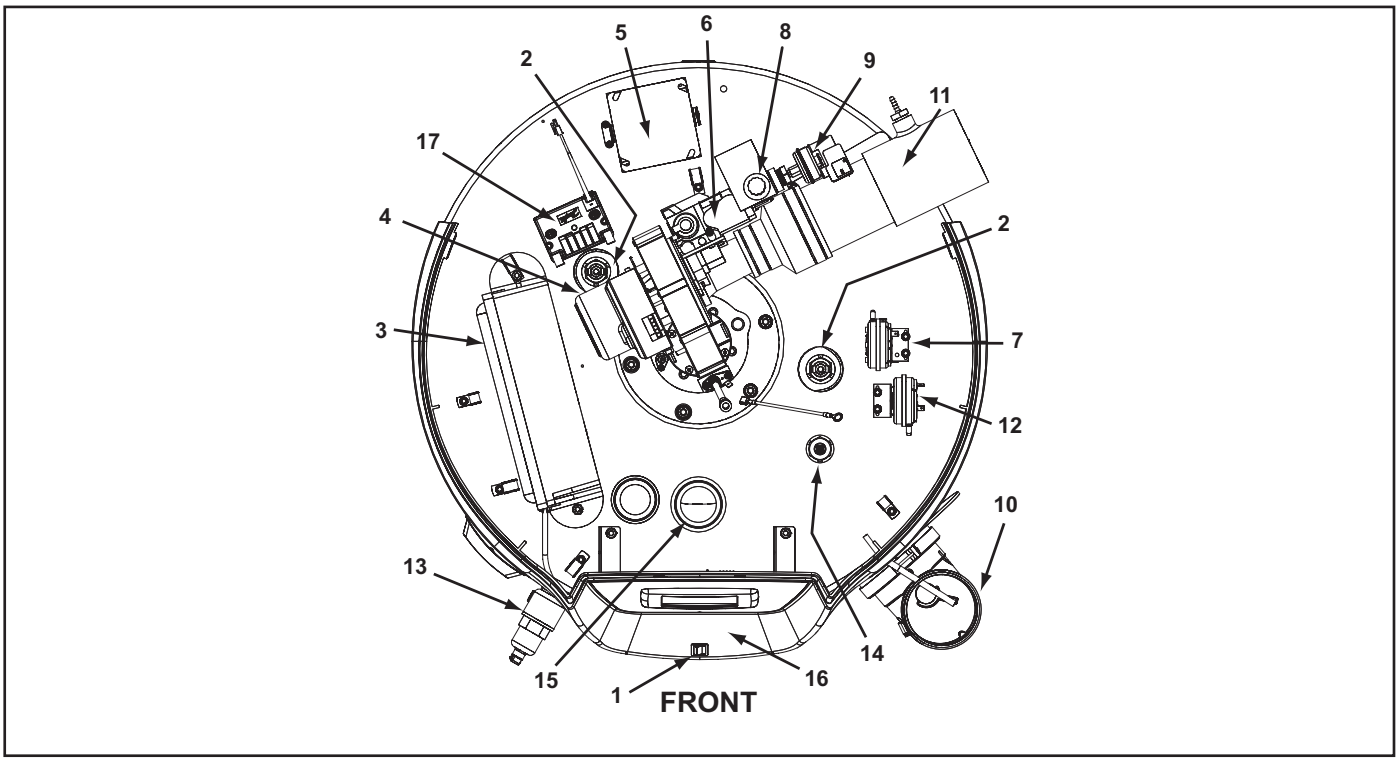

Figure 3

COMPONENTS (All Models)

IMPORTANT. The Enable/Disable switch listed in this manual is NOT an "on/off" switch and does not disconnect 120 volt power to the CCB and other heater components.

1. Water Heater's Enable/Disable Switch. When in the "Disabled" position the switch removes electrical power from the gas valve so that water heating is disabled. The display, CCB, and other electrical components will still be energized and the display will read "Water Heating Disabled".
2. Powered anode rods. The water heaters covered in this manual are equipped with powered (non sacrificial) anode rods. The SUF 60120 has one powered anode, all other models will have two. Protective current is fed by the control system to the titanium electrodes at the end of each anode rod. This current flows through the water to the conductive surfaces inside the storage tank which diminishes the corrosive effect of water when it comes in contact with steel.
3. Central Control Board (CCB) enclosure. This enclosure houses the control system's main circuit board, power supply board, power transformer, and configuration key. The CCB regulates water temperature and controls all water heater functions, see Control System Operation on page 45.
4. Combustion Blower Assembly includes, Gas Valve and Venturi gas feed system.
5. 120 VAC junction box. Incoming power supply, ground connections, and other field installed electrical connections are made here. See Power Supply on page 13 and Power Supply Connections on page 42.
6. Water heater's 24 Volt Gas Valve.
7. Blocked Intake Air switch. Normally closed contacts that open on fall in pressure. This switch is used to insure intake (combustion) air to the water heater is not restricted. The control system monitors this switch and will disable heating operation if its contacts are open during a heating cycle.
8. Supply gas line connection. See the requirements for the Gas Supply Systems on page 13.
9. Low Gas Pressure switch. Normally open contacts that close on a rise in pressure. This switch is used to insure supply gas pressure is above minimum requirements. The control system monitors this switch and will disable heating operation if its contacts are open during a heating cycle. See Gas Pressure Requirements and Table 3 on page 11.
10. Vent connection (exhaust / condensate elbow) - three inch aluminum.
11. Intake air connection - 3 inch PVC.
12. Blocked Exhaust (vent) switch. Normally closed contacts that open on a rise in pressure. This switch is used to insure the Exhaust (vent) piping connected to the water heater is not restricted. The control system monitors this switch and will disable heating operation if its contacts are open during a heating cycle.
13. Temperature-Pressure Relief Valve. See Temperature-Pressure Relief Valve on page 15.
14. Upper Temperature Probe, 1 of 2 temperature probes. The water heater's control system monitors this probe to detect water temperature in the upper portion of the storage tank. The Upper Temperature Probe also houses the ECO (energy cut out) switch. This is a non adjustable high temperature limit switch. The ECO switch contacts are normally closed and will open on a temperature rise. See High Temperature Limit Control (ECO) on page 44.
15. Water outlet connection 1 1/2" NPT.
16. UIM (user interface module). The UIM includes the display circuit board and the control system's LCD Touch Display. Used to adjust various user settings and view operational information. See Control System Operation on page 45.
17. Spark Ignition Transformer. When energized, sends the electrical current to the spark igniter.

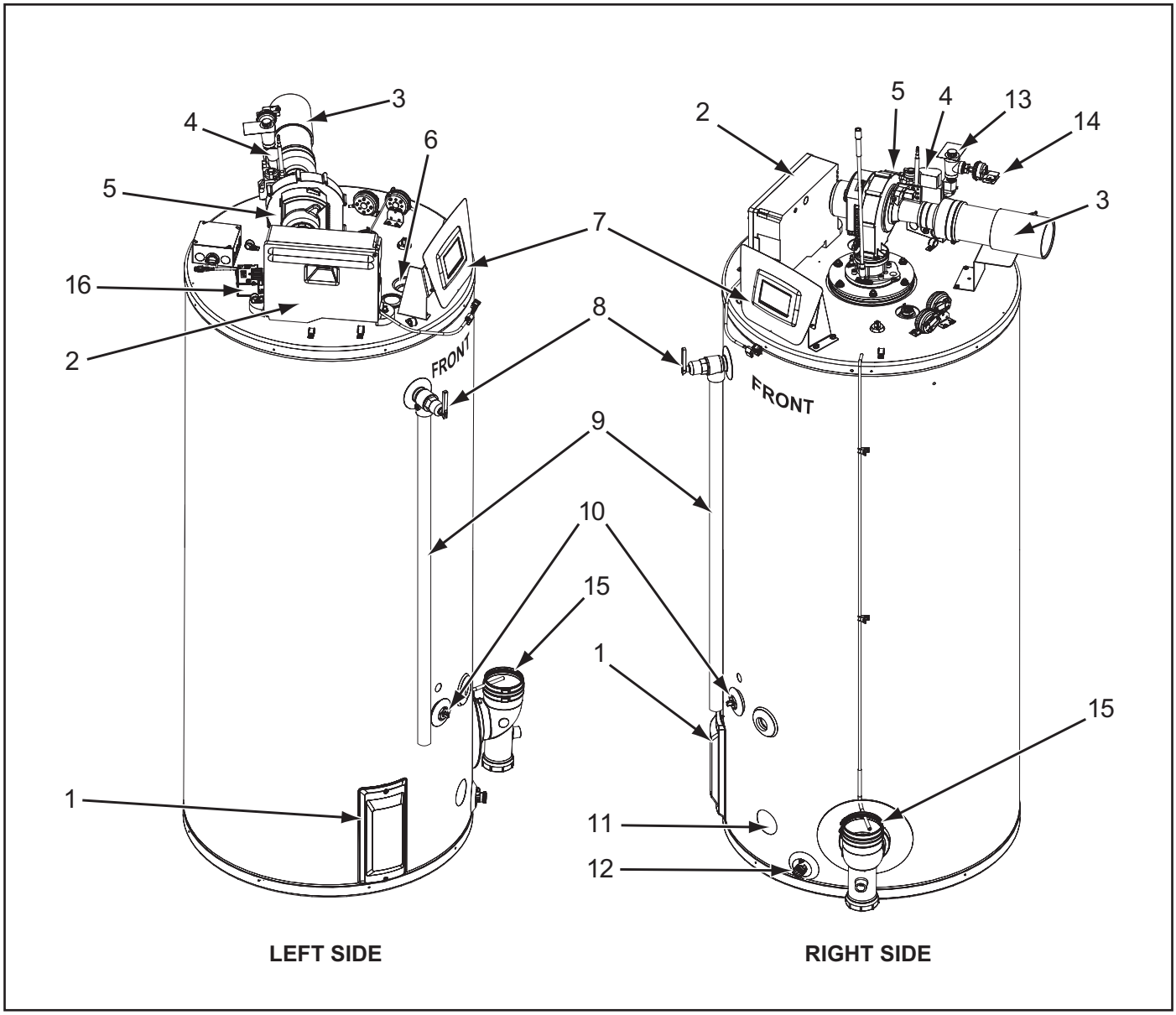

Figure 4

SIDE VIEWS

1. Cleanout access panel, covers water heater cleanout opening and ASME plate where applicable.
2. CCB enclosure - see item 3 on page 8 for description.
3. Intake air connection - 3 inch PVC.
4. Water heater 24 Volt Gas Valve.
5. Combustion Blower.
6. Water outlet - 1 1/2” NPT connection.
7. UIM (user interface module). The UIM includes the display circuit board and the control system’s LCD Touch Display. Used to adjust various user settings and view operational information. See Control System Operation on page 45.
8. Temperature-Pressure Relief Valve. See Temperature-Pressure Relief Valve on page 15.
9. Temperature-Pressure Relief Valve discharge pipe - see T&P Valve Discharge Pipe Requirements: on page 15.
10. Lower Temperature Probe, 1 of 2 temperature probes. The water heater’s control system monitors this probe to detect water temperature in the lower portion of the storage tank.
11. Water inlet - 1 1/2” NPT connection.
12. Water heater drain valve.
13. Supply gas line connection. See Gas Supply Systems on page 13.
14. Low Gas Pressure switch, see description on page 8. See Gas Pressure Requirements and Table 3 on page 11.
15. Vent Connection (Exhaust/Condensate Elbow) 3" Aluminum.
16. Spark Ignition Transformer. When energized, sends the electrical current to the spark igniter.

INSTALLATION CONSIDERATIONS

ROUGH IN DIMENSIONS

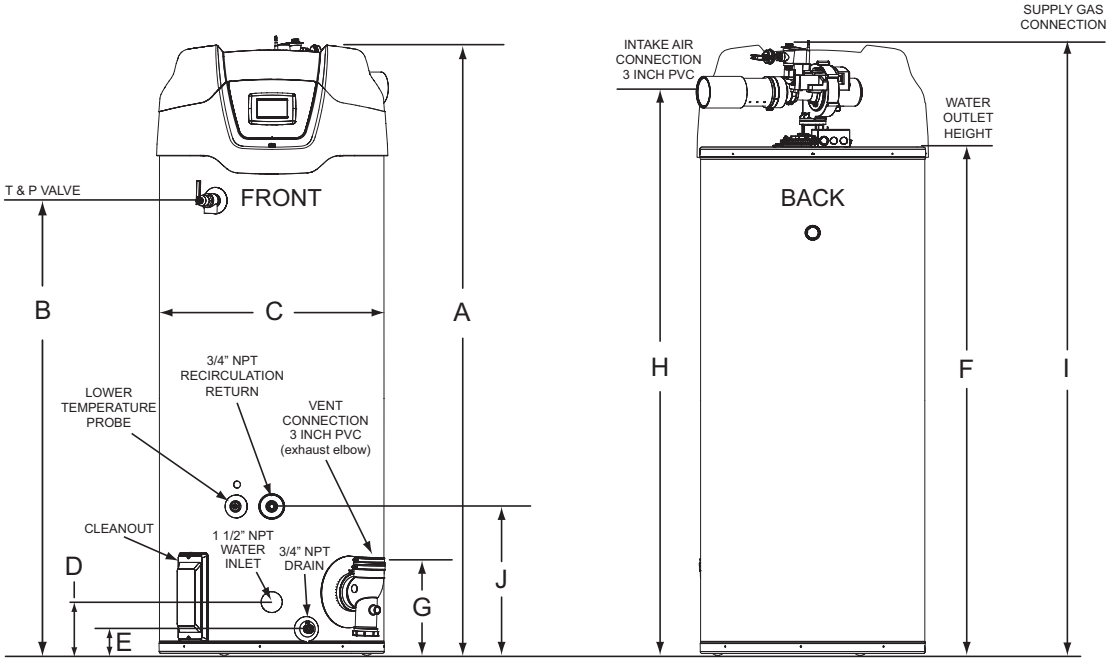

These designs comply with the current edition of the American National Standard for Gas Water Heaters, Volume III, ANSI Z21.10.3 / CSA 4.3 as an automatic circulating tank water heater, and automatic storage water heaters.

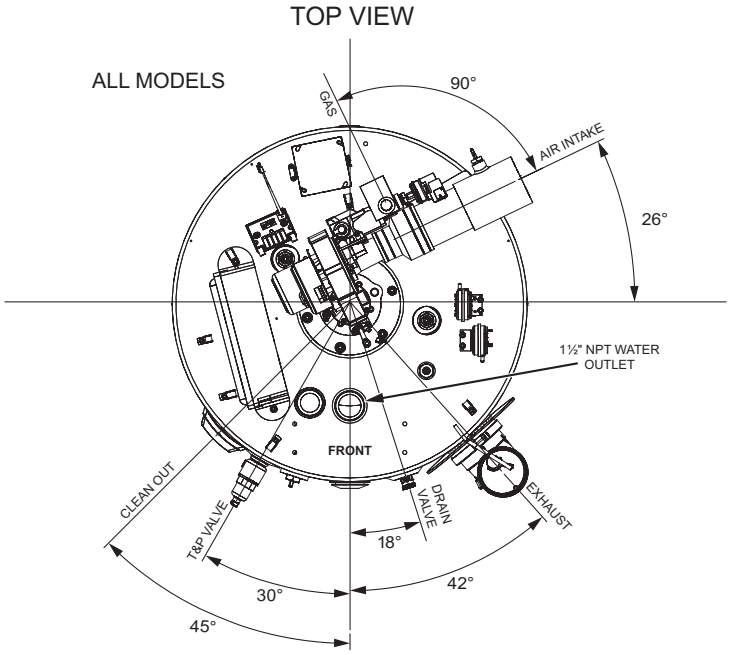

* Center line of water outlet on top of the water heaters is approximately 7 inches from the front edge of the water heater.

MODEL	DIMENSIONS										APPROX. SHIP WEIGHT STD	APPROX. SHIP WEIGHT ASME
	A	B	C	D	E	F	G	H	I	J		
	INCHES (CM)	INCHES (CM)	INCHES (CM)	INCHES (CM)	INCHES (CM)	INCHES (CM)	INCHES (CM)	INCHES (CM)	INCHES (CM)	INCHES (CM)	LBS (KG)	LBS (KG)
SUF 60120	55-1/2 (141)	35 (88.9)	27-3/4 (70.5)	6-5/16 (16)	3 (7.62)	42-1/4 (107.32)	11-1/4 (28.6)	48-1/2 (123.2)	53-1/2 (135.9)	18-1/4 (46.36)	460 (208)	490 (220)
SUF 100150	76-1/2 (194.9)	56-3/8 (143.2)	27-3/4 (70.5)	6-5/16 (16)	3 (7.62)	64 (162.6)	11-1/4 (28.6)	70 (177.8)	75-1/2 (191.8)	18-1/4 (46.36)	523 (237)	553 (251)
SUF 100199	76-1/2 (194.9)	56-3/8 (143.2)	27-3/4 (70.5)	6-5/16 (16)	3 (7.62)	64 (162.6)	11-1/4 (28.6)	70 (177.8)	75-1/2 (191.8)	18-1/4 (46.36)	523 (237)	553 (251)
SUF 100250	76-1/2 (194.9)	56-3/8 (143.2)	27-3/4 (70.5)	6-5/16 (16)	3 (7.62)	64 (162.6)	11-1/4 (28.6)	70 (177.8)	75-1/2 (191.8)	18-1/4 (46.36)	523 (237)	553 (251)

Figure 5

GAS LINE CONNECTION SIZE

TABLE 1

† MODEL	SERIES	NATURAL GAS	PROPANE GAS
SUF 60120	300/301	3/4 "NPT	3/4 "NPT
SUF 100150	300/301	3/4 "NPT	3/4 "NPT
SUF 100199	300/301	3/4 "NPT	3/4 "NPT
SUF 100250	300/301	3/4 "NPT	3/4 "NPT

† Depending on the installed equivalent length, and/or the number of appliances connected, the supply gas line size may have to be increased beyond the minimum required sizes - see Gas Line Sizing on page 40.

STORAGE CAPACITIES

TABLE 2

MODEL	U. S. GALLONS	LITERS
SUF 60120	60	227
SUF 100150	100	379
SUF 100199	100	379
SUF 100250	100	379

GAS PRESSURE REQUIREMENTS

TABLE 3

MODEL	*MANIFOLD PRESSURE		MINIMUM SUPPLY PRESSURE		MAXIMUM SUPPLY PRESSURE	
	NATURAL GAS	PROPANE GAS	NATURAL GAS	PROPANE GAS	NATURAL GAS	PROPANE GAS
SUF 60120	0" W.C. (0 kPa)	0" W.C. (0 kPa)	3.5” W. C. (1.10 kPa)	8.5” W. C. (2.12 kPa)	14” W. C. (3.49 kPa)	14” W. C. (3.49 kPa)
SUF 100150	0" W.C. (0 kPa)	0" W.C. (0 kPa)	3.5” W. C. (1.10 kPa)	8.5” W. C. (2.12 kPa)	14” W. C. (3.49 kPa)	14” W. C. (3.49 kPa)
SUF 100199	0” W. C. (0 kPa)	0” W. C. (0 kPa)	3.5” W. C. (1.10 kPa)	8.5” W. C. (2.12 kPa)	14” W. C. (3.49 kPa	14” W. C. (3.49 kPa)
SUF 100250	0” W. C. (0 kPa)	0” W. C. (0 kPa)	3.5” W. C. (1.10 kPa)	8.5” W. C. (2.12 kPa)	14” W. C. (3.49 kPa)	14” W. C. (3.49 kPa)

* **The manifold pressure is the factory setting and is not adjustable.** A negative pressure will be seen with just the blower running without the Gas Control Valve open.

RECOVERY CAPACITIES

TABLE 4

						U. S. GALLONS/HR & LITERS/HR AT TEMPERATURE RISE INDICATED											
Model	Type of Gas	Input		Thermal Efficiency%	°F	30°F	40°F	50°F	60°F	70°F	80°F	90°F	100°F	110°F	120°F	130°F	140°F
		Btu/hr	kW		°C	17°C	22°C	28°C	33°C	39°C	44°C	50°C	56°C	61°C	67°C	72°C	78°C
SUF 60120	Natural	120,000	35	95	GPH	461	345	276	230	197	173	154	138	126	115	106	99
	Propane				LPH	1743	1308	1046	872	747	654	581	523	475	436	402	374
SUF 100150	Natural	150,000	44	98	GPH	594	445	356	297	255	223	198	178	162	148	137	127
	Propane				LPH	2248	1686	1349	1124	963	843	749	674	613	562	519	482
SUF 100199	Natural	199,900	58	97	GPH	783	588	470	392	336	294	261	235	214	196	181	168
	Propane				LPH	2965	2224	1779	1483	1271	1112	988	890	809	741	684	635
SUF 100250	Natural	250,000	73	96	GPH	970	727	582	485	416	364	323	291	264	242	224	208
	Propane				LPH	3670	2753	2202	1835	1573	1376	1223	1101	1001	918	847	786

LOCATING THE WATER HEATER

Carefully choose a location for the new water heater. The placement is a very important consideration for the safety of the occupants in the building and for the most economical use of the water heater.

CAUTION

Property Damage Hazard

- All water heaters eventually leak.
- Do not install without adequate drainage.

Whether replacing an existing water heater or installing the water heater in a new location observe the following critical points:

1. The water heater must be located indoors.
2. The water heater must not be located in an area where it will be subject to freezing temperatures.
3. Locate the water heater so it is protected and not subject to physical damage by a moving vehicle.
4. Locate the water heater on a level surface.
5. Locate the water heater near a floor drain. The water heater should be located in an area where leakage of the tank or connections will not result in damage to the area adjacent to the water heater or to lower floors of the structure. When such locations cannot be avoided, it is recommended that a metal drain pan, adequately drained, be installed under the water heater.
6. Locate the water heater close to the point of major hot water usage.
7. Locate the water heater close to a 120 VAC power supply. See Power Supply on page 13 for requirements.
8. Locate the water heater where an adequate supply of fresh air for combustion and ventilation can be obtained. See Air Requirements on page 17.
9. Locate the water heater where the vent and intake air piping, when installed, will remain within the maximum equivalent lengths allowed. See Venting Requirements on page 22.
10. Do not locate the water heater where noise (such as the Combustion Blower) during normal operation will be objectionable in adjacent areas.
11. Do not locate the water heater where the subsequent installation of the vent (exhaust) or intake air terminations would be objectionable due to noise at the termination(s). This includes locations close to or across from windows and doors. See Venting Installation on page 21.

⚠ WARNING

Fire or Explosion Hazard

- Do not store or use gasoline or other flammable vapors and liquids in the vicinity of this or any other appliance.
- Avoid all ignition sources if you smell gas.
- Do not expose water heater controls to excessive gas pressure.
- Use only the gas shown on the water heater rating label.
- Maintain required clearances to combustibles.
- Keep ignition sources away from faucets after extended periods of non-use.

Read instruction manual before installing, using or servicing water heater.

There is a risk in using fuel burning appliances such as gas water heaters in rooms, garages or other areas where gasoline, other flammable liquids or engine driven equipment or vehicles are stored, operated or repaired. Flammable vapors are heavy and travel along the floor and may be ignited by the water heater's igniter or Main Burner flames causing fire or explosion.

Flammable items, pressurized containers or any other potential fire hazardous articles must never be placed on or adjacent to the water heater.

CLEARANCE TO COMBUSTIBLE MATERIALS

The water heaters covered in this manual are approved for installation on combustible flooring. The clearance to combustible and non combustible construction materials is 0 inches on the back and sides of the water heater. These water heaters are also approved for installation in an alcove.

When the water heater is installed directly on carpeting, the water heater shall be installed on a metal or wood panel extending beyond the full width and depth of the water heater by at least 3 in (76.2 mm) in any direction or, if the water heater is installed in an alcove or closet, the entire floor shall be covered by the panel. The panel must be strong enough to carry the weight of the heater when full of water.

NOTE: Adequate clearance for servicing should be maintained on all installations. See Service Clearance below.

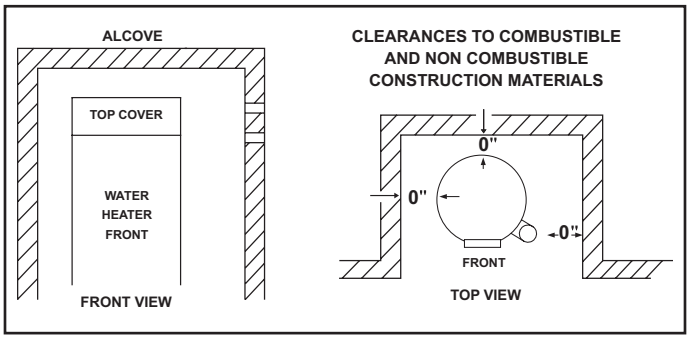

Figure 6

SERVICE CLEARANCE

A service clearance of 24 inches (61 cm) should be maintained from serviceable parts such as the T&P valve, control system components, gas valve, clean out opening, drain valve, the vent connection (exhaust/condensate elbow). Leave as much room as possible above the water heater and near the exhaust elbow for this reason. See Figure 8 on page 16.

INTAKE AIR AND VENT PIPE CLEARANCES

The minimum clearance from combustible materials for the vent (exhaust) and intake air piping shall be 0 inches. Vent or intake air piping passing through a combustible wall or ceiling must be a continuous run (no joints).

EXTENDED VENT TERMINATIONS

The water heaters covered by this manual can be installed using 3 inch pipe for the intake air and/or vent piping up to a maximum of 50 equivalent feet (15.2 m). The intake air and/or vent piping can be extended up to 120 equivalent feet (36.5 m) by installing 4 inch pipe. See the Venting Requirements on page 22.

The water heater ships from the factory with two (2) 3 inch terminations that are 45° PVC elbows with a debris screen installed. When 4 inch intake air or vent pipe is installed, factory supplied 4 inch terminations must be used.

Contact your local distributor or call the parts department phone number listed on the back cover of this manual to order 4 inch termination(s).

OPTIONAL DIRECT VENT TERMINATIONS

The water heaters covered in this manual can be installed in a Direct Vent configuration using optional concentric or Low Profile terminations. See Concentric Termination Installation on page 30 and Low Profile Vent installation on page 34.

Concentric and low profile terminations must be ordered separately. Contact your local distributor or call the parts department phone number listed on the back cover of this manual to order.

HARD WATER

Where hard water conditions exist, water softening or the threshold type of water treatment is recommended. This will protect the dishwashers, coffee urns, water heaters, water piping and other equipment. See Maintenance on page 63 for sediment and lime scale removal procedures.

CIRCULATION PUMPS

A circulating pump is used when a system requires a circulating loop or there is a storage tank used in conjunction with the water heater. The tank is provided with a 3/4" NPT recirculation loop return connection. See the Water Piping Diagrams beginning on page 69 for installation location of circulating pumps.

See Circulation Pump Wiring Diagrams on page 68 for electrical hookup information. Install in accordance with the current edition of the National Electrical Code, NFPA 70 or the Canadian Electrical Code, CSA C22.1.

Stainless steel circulating pumps are recommended for use with commercial water heaters.

Refer to the circulating pump manufacturer's instructions for its operation, lubrication and maintenance instructions.

INSULATION BLANKETS

⚠ WARNING

Breathing Hazard - Carbon Monoxide Gas

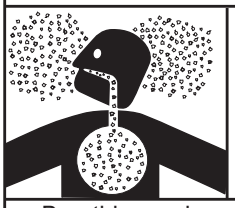

- Do not obstruct water heater air intake with insulating blanket.
- Gas and carbon monoxide detectors are available.
- Install water heater in accordance with the instruction manual.

Breathing carbon monoxide can cause brain damage or death. Always read and understand instruction manual.

Insulation blankets are available to the general public for external use on gas water heaters but are not necessary with these products. The purpose of an insulation blanket is to reduce the standby heat loss encountered with storage tank heaters. The water heaters covered by this manual meet or exceed the Energy Policy Act standards with respect to insulation and standby heat loss requirements, making an insulation blanket unnecessary.

Should you choose to apply an insulation blanket to this heater, you should follow these instructions. See the Features and Components section of this manual for identification of components mentioned below. Failure to follow these instructions can restrict the air flow required for proper

combustion, potentially resulting in fire, asphyxiation, serious personal injury or death.

- **DO NOT** apply insulation to the top of the water heater, as this will interfere with safe operation of the blower assembly.
- **DO NOT** cover the control system LCD on top of the water heater.
- **DO NOT** cover the Temperature-Pressure Relief Valve.
- **DO NOT** cover the instruction manual. Keep it on the side of the water heater or nearby for future reference.
- **DO** obtain new warning and instruction labels from the manufacturer for placement on the blanket directly over the existing labels.
- **DO** inspect the insulation blanket frequently to make certain it does not sag, thereby obstructing combustion air flow.

INSTALLATION REQUIREMENTS

GAS SUPPLY SYSTEMS

Low pressure building gas supply systems are defined as those systems that cannot under any circumstances exceed 14” W.C. (1/2 PSI Gauge). These systems do not require pressure regulation. Measurements should be taken to insure that gas pressures are stable and fall within the requirements stated on the water heater rating plate. Readings should be taken with all gas burning equipment off (static pressure) and with all gas burning equipment running at maximum rate (dynamic pressure). The gas supply pressure must be stable within 1.5” W.C. from static to dynamic pressure to provide good performance. Pressure drops that exceed 1.5” W.C. may cause rough starting, noisy combustion or nuisance outages. Increases or spikes in static pressure during off cycles may cause failure to ignite or in severe cases damage to appliance gas valves. If your low pressure system does NOT meet these requirements, the installer is responsible for the corrections.

High Pressure building supply systems use pressures that exceed 14” W.C. (1/2 PSI Gauge). These systems must use field supplied regulators to lower the gas pressure to less than 14” W.C. (1/2 PSI Gauge). Water heaters require gas regulators that are properly sized for the water heater input and deliver the rating plate specified pressures. Gas supply systems where pressure exceeds 5 PSI often require multiple regulators to achieve desired pressures. Systems in excess of 5 PSI building pressure should be designed by gas delivery professionals for best performance. Water heaters connected to gas supply systems that exceed 14” W.C. (1/2 PSI Gauge) at any time must be equipped with a gas supply regulator.

All models require a minimum gas supply pressure of 3.5" W.C. for natural gas and 8.5" W.C. for propane gas. The minimum supply pressure is measured while gas is flowing (dynamic pressure). The supply pressure should never fall below 3.5" W.C. for natural gas and 8.5" W.C. for propane gas. The supply pressure should be measured with all gas fired appliances connected to the common main firing at full capacity. If the supply pressure drops more than 1.5” W.C. as gas begins to flow to the water heater then the supply gas system including the gas line and/or the gas regulator may be restricted or undersized. See Supply Gas Regulator section and Gas Piping section of this manual. The gas valve on all models has a maximum gas supply pressure limit of 14” W.C. The maximum supply pressure is measured while gas is not flowing (static pressure).

SUPPLY GAS REGULATOR

The maximum allowable gas supply pressure for this water heater is 14.0 inches W.C. (3.49 kPa) for natural and propane gas. Install a positive lock-up gas pressure regulator in the gas supply line if inlet gas pressure can exceed these pressures at any time.

If a positive lock-up regulator is required follow these instructions:

1. Positive lock-up gas pressure regulators must be rated at or above the input Btu/hr rating of the water heater they supply.
2. Supply gas regulators shall have inlet and outlet connections not less than the minimum supply gas line size for the water heater they supply. See Table 11, page 40.
3. Positive lock-up gas pressure regulator(s) should be installed no closer than 3 feet (1 meter) and no farther than 8 feet (2.4 meters) from the water heater’s inlet gas connection.
4. After installing the positive lock-up gas pressure regulator(s) an initial nominal supply pressure setting of 7.0” W.C. while the water heater is operating is recommended and will generally provide good water heater operation. Some additional adjustments may be required later to maintain a steady gas supply pressure.
5. When installing multiple water heaters in the same gas supply system it is recommended that individual positive lock-up gas pressure regulators be installed at each unit from the supply gas connection on the water heater.

POWER SUPPLY

The water heaters covered in this manual require a 120 VAC, 1Ø (single phase), 60Hz, 15 amp power supply and must also be electrically grounded in accordance with local codes or, in the absence of local codes, with the National Electrical Code, ANSI/NFPA 70 or the Canadian Electrical Code, CSA C22.1.

DEDICATED POWER WIRING AND BREAKERS

Dedicated power supply wires, ground wiring and dedicated circuit breakers often prevent electrical line noise and are required when installing the water heater.

NOTE: This water heater should not be connected to an electrical supply with a Ground Fault Circuit Interrupter (GFCI) or Arc Fault Circuit Interrupter (AFCI) with Integral GFCI protection as defined in NFPA 70, CSA C22.1 and UL 943.

POWER FLUCTUATIONS AND ELECTRICAL NOISE

The water heater’s control system requires a source of stable clean electricity for proper operation. Connecting the water heater to a branch circuit that is subject to fluctuations in voltage level or electrical line noise such as EMI (electro magnetic interference) or RFI (radio frequency interference) may cause erratic control system operation and malfunction.

A high quality power supply filter/suppressor must be installed if the above conditions exist. Call the technical support phone number listed on the back cover of this manual or contact a local power filter/suppressor supplier for more information.

NOTE: Malfunctions caused by the power supply and costs to install power supply filters are not covered under the limited warranty.

MIXING VALVES

⚠ DANGER

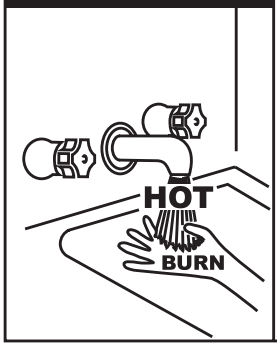

Water temperature over 125°F (52°C) can cause severe burns instantly resulting in severe injury or death.

Children, the elderly and the physically or mentally disabled are at highest risk for scald injury.

Feel water before bathing or showering.

Temperature limiting devices such as mixing valves must be installed when required by codes and to ensure safe temperatures at fixtures.

Water heated to a temperature which will satisfy clothes washing, dish washing, and other sanitizing needs can scald and cause permanent injury upon contact. Short repeated heating cycles caused by small hot water uses can cause temperatures at the point of use to exceed the water heater's temperature setting by up to 20°F (11°C).

Some people are more likely to be permanently injured by hot water than others. These include the elderly, children, the infirm and the physically/mentally disabled. Table 5 shows the approximate time-to-burn relationship for normal adult skin. If anyone using hot water provided by the water heater being installed fits into one of these groups or if there is a local code or state law requiring a certain water temperature at the point of use, then special precautions must be taken.

In addition to using the lowest possible temperature setting that satisfies the demand of the application a Mixing Valve should be installed at the water heater (see Figure 7) or at the hot water taps to further reduce system water temperature.

Mixing valves are available at plumbing supply stores. Consult a Qualified Installer or Service Agency. Follow mixing valve manufacturer's instructions for installation of the valves.

TABLE 5

Water Temperature °F (°C)	Time for 1st Degree Burn (Less Severe Burns)	Time for Permanent Burns 2nd & 3rd Degree (Most Severe Burns)
110 (43)	(normal shower temp.)	
116 (47)	(pain threshold)	
116 (47)	35 minutes	45 minutes
122 (50)	1 minute	5 minutes
131 (55)	5 seconds	25 seconds
140 (60)	2 seconds	5 seconds
149 (65)	1 second	2 seconds
154 (68)	instantaneous	1 second
(U.S. Government Memorandum, C.P.S.C., Peter L. Armstrong, Sept. 15, 1978)		

DISHWASHING MACHINES

All dishwashing machines meeting the National Sanitation Foundation requirements are designed to operate with water flow pressures between 15 and 25 pounds per square inch (103 kPa and 173 kPa). Flow pressures above 25 pounds per square inch (173 kPa), or below 15 pounds per square inch (103 kPa), will result in improperly sanitized dishes. Where pressures are high, a water pressure reducing or flow regulating control valve should be used in the 180°F (82°C) line to the dishwashing machine and should be adjusted to deliver water pressure between these limits.

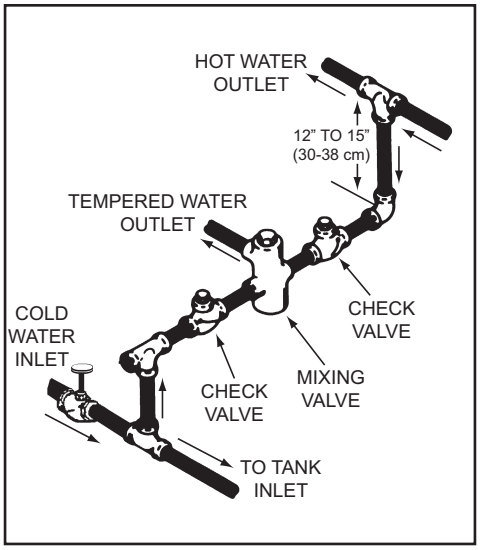

Figure 7

The National Sanitation Foundation also recommends circulation of 180°F (82°C) water. The circulation should be just enough to provide 180°F (82°C) water at the point of take-off to the dishwashing machine.

Adjust flow by throttling a full port ball valve installed in the circulating line on the outlet side of the pump. Never throttle flow on the suction side of a pump. See the Water Piping Diagrams beginning on page 69.

NOTE: To comply with NSF Standard 5 installation requirements the bottom of the water heater must be sealed to the floor with a silicone based sealant or elevated 6 inches above the floor.

CLOSED WATER SYSTEMS

Water supply systems may, because of code requirements or such conditions as high line pressure, among others, have installed devices such as pressure reducing valves, check valves, and back flow preventers. Devices such as these cause the water system to be a closed system.

THERMAL EXPANSION

As water is heated, it expands (thermal expansion). In a closed system the volume of water will grow when it is heated. As the volume of water grows there will be a corresponding increase in water pressure due to thermal expansion. Thermal expansion can cause premature tank failure (leakage). This type of failure is not covered under the limited warranty. Thermal expansion can also cause intermittent Temperature-Pressure Relief Valve operation: water discharged from the valve due to excessive pressure build up. This condition is not covered under the limited warranty. The Temperature-Pressure Relief Valve is not intended for the constant relief of thermal expansion.

A properly sized thermal expansion tank must be installed on all closed systems to control the harmful effects of thermal expansion. Contact a local plumbing service agency to have a thermal expansion tank installed.

See Water Line Connections on page 43 and the Water Piping Diagrams beginning on page 69.

TEMPERATURE-PRESSURE RELIEF VALVE

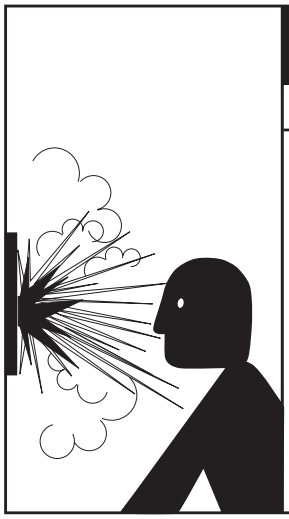

⚠ WARNING

Explosion Hazard

- Temperature-Pressure Relief Valve must comply with ANSI Z21.22-CSA 4.4 and ASME code.
- Properly sized temperature-pressure relief valve must be installed in opening provided.
- Can result in overheating and excessive tank pressure.
- Can cause serious injury or death.

This water heater is provided with a properly rated/sized and certified combination Temperature-Pressure Relief Valve (T&P valve) by the manufacturer. The valve is certified by a nationally recognized testing laboratory that maintains periodic inspection of production of listed equipment of materials as meeting the requirements for Relief Valves for Hot Water Supply Systems, ANSI Z21.22 • CSA 4.4, and the code requirements of ASME.

If replaced, the new T&P valve must meet the requirements of local codes, but not less than a combination Temperature-Pressure Relief Valve rated/sized and certified as indicated in the above paragraph. The new valve must be marked with a maximum set pressure not to exceed the marked hydrostatic working pressure of the water heater (150 psi = 1,035 kPa) and a discharge capacity not less than the water heater Btu/hr or kW input rate as shown on the water heater's model rating label.

NOTE: In addition to the factory installed Temperature-Pressure Relief Valve on the water heater, each remote storage tank that may be installed and piped to a water heating appliance must also have its own properly sized, rated and approved Temperature-Pressure Relief Valve installed. Call the toll free technical support phone number listed on the back cover of this manual for technical assistance in sizing a Temperature-Pressure Relief Valve for remote storage tanks.

For safe operation of the water heater, the Temperature-Pressure Relief Valve must not be removed from its designated opening nor plugged. The Temperature-Pressure Relief Valve must be installed directly into the fitting of the water heater designed for the relief valve. Install discharge piping so that any discharge will exit the pipe within 6 inches (15.2 cm) above an adequate floor drain, or external to the building. In cold climates it is recommended that it be terminated at an adequate drain inside the building. Be certain that no contact is made with any live electrical part. The discharge opening must not be blocked or reduced in size under any circumstances. Excessive length, over 30 feet (9.14 m), or use of more than four elbows can cause restriction and reduce the discharge capacity of the valve.

No valve or other obstruction is to be placed between the Temperature-Pressure Relief Valve and the tank. Do not connect discharge piping directly to the drain unless a 6" (15.2 cm) air gap is provided. To prevent bodily injury, hazard to life, or property damage, the relief valve must be allowed to discharge water in adequate quantities should circumstances demand. If the discharge pipe is not connected to a drain or other suitable means, the water flow may cause property damage.

CAUTION

Water Damage Hazard

- Temperature-Pressure Relief Valve discharge pipe must terminate at adequate drain.

T&P Valve Discharge Pipe Requirements:

- Shall not be smaller in size than the outlet pipe size of the valve, or have any reducing couplings or other restrictions.
- Shall not be plugged or blocked.
- Shall not be exposed to freezing temperatures.
- Shall be of material listed for hot water distribution.
- Shall be installed so as to allow complete drainage of both the Temperature-Pressure Relief Valve and the discharge pipe.
- Must terminate a maximum of six inches above a floor drain or external to the building. In cold climates, it is recommended that the discharge pipe be terminated at an adequate drain inside the building.
- Shall not have any valve or other obstruction between the relief valve and the drain.

⚠ DANGER

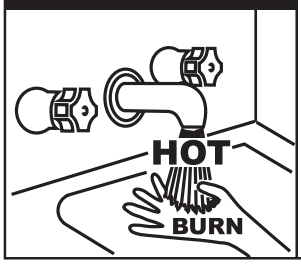

- Burn hazard.
- Hot water discharge.
- Keep clear of Temperature-Pressure Relief Valve discharge outlet.

The Temperature-Pressure Relief Valve must be manually operated at least twice a year. Caution should be taken to ensure that (1) no one is in front of or around the outlet of the Temperature-Pressure Relief Valve discharge line, and (2) the water manually discharged will not cause any bodily injury or property damage because the water may be extremely hot. If after manually operating the valve, it fails to completely reset and continues to release water, immediately close the cold water inlet to the water heater, follow the draining instructions in this manual, and replace the Temperature-Pressure Relief Valve with a properly rated/sized new one.

NOTE: The purpose of a Temperature-Pressure Relief Valve is to prevent excessive temperatures and pressures in the storage tank. The T&P valve is not intended for the constant relief of thermal expansion. A properly sized thermal expansion tank must be installed on all closed systems to control thermal expansion, see Closed Water Systems and Thermal Expansion on page 14.

If you do not understand these instructions or have any questions regarding the Temperature-Pressure Relief Valve call the toll free number listed on the back cover of this manual for technical assistance.

CONDENSATE DRAIN

The water heaters covered in this manual are condensing appliances and require a building drain to be located in close proximity to allow the condensate to drain safely.

Condensate drains from the water heater at the exhaust elbow located at the bottom. The field installed condensate drain line must not be elevated above the condensate drain connection on the built-in condensate trap, see Figure 8. If the condensate does not drain properly it will build up in the exhaust (vent) elbow. This will restrict the flow of flue gases and cause the Blocked Exhaust pressure switch to open its contacts. The control system monitors all pressure switches, if the Blocked Exhaust Switch contacts are open the control system will lock out and disable heating operation. The “Blocked Exhaust” Fault message will be displayed on the control system’s LCD, see Fault And Alert Conditions beginning on page 60.

The Condensate Cleanout Cap must be on and tight when unit is in operation.

The exhaust elbow has a built in condensate trap. Do not install an additional trap in the condensate drain piping, see Figure 8.

NOTE: If the “Blocked Exhaust “ Fault message is ever displayed on the control system LCD, check the condensate drain first and ensure it is not blocked. Periodically, inspect and clean the built-in condensate trap of any debris.

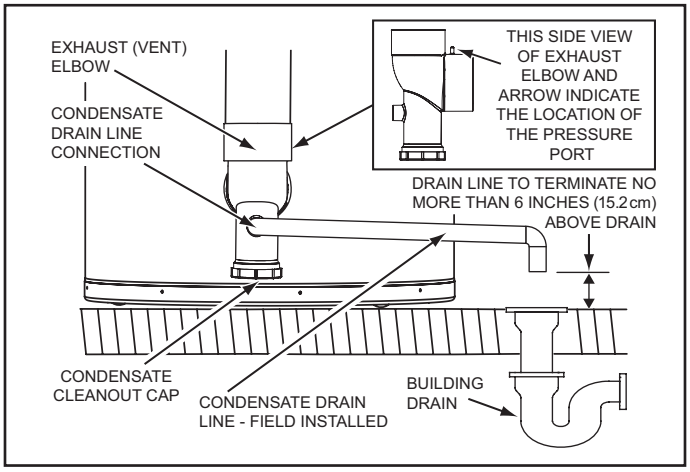

Figure 8

CONDENSATE DRAIN WATER TRAP

DO NOT remove the factory installed exhaust/condensate elbow for any reason, see Figure 8. The water heater’s vent pipe is under a slight positive pressure while unit is in operation. The water trap inside of the exhaust/condensate elbow prevents flue gases from escaping into the installed space. The exhaust elbow has a built in condensate trap. Do not install an additional trap in the condensate drain piping, see Figure 8 and Condensate Drain Installation on page 39.

CONDENSATE PH LEVEL

The condensate drains from the water heater’s covered in this manual have PH levels between 4.3 and 5.0. Install a commercially available neutralizing kit if required by local codes.

NOTE: Lower PH levels are acidic. Do not connect a metal drain line, such as copper, to the water heater for this reason. See Condensate Drain Installation on page 39.

COMBUSTIBLE MATERIAL STORAGE

⚠ WARNING

Fire or Explosion Hazard

- Do not store or use gasoline or other flammable vapors and liquids in the vicinity of this or any other appliance.
- Avoid all ignition sources if you smell gas.
- Do not expose water heater controls to excessive gas pressure.
- Use only the gas shown on the water heater rating label.
- Maintain required clearances to combustibles.
- Keep ignition sources away from faucets after extended periods of non-use.

Read instruction manual before installing, using or servicing water heater.

Keep water heater area clear and free of combustible materials, gasoline and other flammable vapors and liquids.

CONTAMINATED AIR

⚠ WARNING

Breathing Hazard - Carbon Monoxide Gas

- Install water heater in accordance with the Instruction Manual and NFPA 54 or CAN/CSA-B149.1.
- To avoid injury, combustion and ventilation air must be taken from outdoors.
- Do not place chemical vapor emitting products near water heater.

Breathing carbon monoxide can cause brain damage or death. Always read and understand instruction manual.

Corrosion of the flue ways and vent system may occur if air for combustion contains certain chemical vapors. Such corrosion may result in failure and risk of asphyxiation.

Combustion air that is contaminated can greatly diminish the life span of the water heater and water heater components such as igniters and burners. Propellants of aerosol sprays, beauty shop supplies, water softener chemicals and chemicals used in dry cleaning processes that are present in the combustion, ventilation or ambient air can cause such damage.

Do not store products of this sort near the water heater. Air which is brought in contact with the water heater should not contain any of these chemicals. If necessary, uncontaminated air should be obtained from remote or outdoor sources. The limited warranty is voided when failure of water heater is due to a corrosive atmosphere. (See limited warranty for complete terms and conditions).

If the water heater will be used in beauty shops, barber shops, cleaning establishments, or self-service laundries with dry cleaning equipment, it is imperative that the water heater(s) be installed in a Direct Vent configuration so that all air for combustion is derived directly from the outdoor atmosphere through a sealed intake air pipe. See Venting Installation on page 21.

AIR REQUIREMENTS

⚠ WARNING

Breathing Hazard - Carbon Monoxide Gas

- Install water heater in accordance with the Instruction Manual and NFPA 54 or CAN/CSA-B149.1.
- To avoid injury, combustion and ventilation air must be taken from outdoors.
- Do not place chemical vapor emitting products near water heater.

Breathing carbon monoxide can cause brain damage or death. Always read and understand instruction manual.

For safe operation an adequate supply of fresh uncontaminated air for combustion and ventilation must be provided.

An insufficient supply of air can cause recirculation of combustion products resulting in contamination that may be hazardous to life. Such a condition often will result in a yellow, luminous burner flame, causing sooting of the combustion chamber, burners and flue tubes and creates a risk of asphyxiation.

Do not install the water heater in a confined space unless an adequate supply of air for combustion and ventilation is brought in to that space using the methods described in the Confined Space section that follows.

Never obstruct the flow of ventilation air. If you have any doubts or questions at all, call your gas supplier. Failure to provide the proper amount of combustion air can result in a fire or explosion and cause property damage, serious bodily injury or death.

UNCONFINED SPACE

An Unconfined Space is one whose volume IS NOT LESS THAN 50 cubic feet per 1,000 Btu/hr (4.8 cubic meters per kW) of the total input rating of all appliances installed in the space. Rooms communicating directly with the space, in which the appliances are installed, through openings not furnished with doors, are considered a part of the unconfined space.

Makeup air requirements for the operation of exhaust fans, kitchen ventilation systems, clothes dryers and fireplaces shall also be considered in determining the adequacy of a space to provide combustion, ventilation and dilution air.

UNUSUALLY TIGHT CONSTRUCTION

In unconfined spaces in buildings, infiltration may be adequate to provide air for combustion, ventilation and dilution of flue gases. However, in buildings of unusually tight construction (for example, weather stripping, heavily insulated, caulked, vapor barrier, etc.) additional air must be provided using the methods described in the Confined Space section that follows.

CONFINED SPACE

A Confined Space is one whose volume IS LESS THAN 50 cubic feet per 1,000 Btu/hr (4.8 cm per kW) of the total input rating of all appliances installed in the space.

Openings must be installed to provide fresh air for combustion, ventilation and dilution in confined spaces. The required size for the openings is dependent on the method used to provide fresh air to the confined space AND the total Btu/hr input rating of all appliances installed in the space.

DIRECT VENT APPLIANCES

Appliances installed in a Direct Vent configuration that derive all air for combustion from the outdoor atmosphere through sealed intake air piping are not factored in the total appliance input Btu/hr calculations used to determine the size of openings providing fresh air into confined spaces.

EXHAUST FANS

Where exhaust fans are installed, additional air shall be provided to replace the exhausted air. When an exhaust fan is installed in the same space with a water heater, sufficient openings to provide fresh air must be provided that accommodate the requirements for all appliances in the room and the exhaust fan. Undersized openings will cause air to be drawn into the room through the water heater's vent system causing poor combustion. Sooting, serious damage to the water heater and the risk of fire or explosion may result. It can also create a risk of asphyxiation.

LOUVERS AND GRILLES

The free areas of the fresh air openings in the instructions that follow do not take in to account the presence of louvers, grilles or screens in the openings.

The required size of openings for combustion, ventilation and dilution air shall be based on the "net free area" of each opening. Where the free area through a design of louver or grille or screen is known, it shall be used in calculating the size of opening required to provide the free area specified. Where the louver and grille design and free area are not known, it shall be assumed that wood louvers will have 25% free area and metal louvers and grilles will have 75% free area. Non motorized louvers and grilles shall be fixed in the open position.

FRESH AIR OPENINGS FOR CONFINED SPACES

The following instructions shall be used to calculate the size, number and placement of openings providing fresh air for combustion, ventilation and dilution in confined spaces. The illustrations shown in this section of the manual are a reference for the openings that provide fresh air into confined spaces only. **DO NOT** refer to these illustrations for the purpose of vent installation. See Venting Installation on page 21 for complete venting installation instructions.

OUTDOOR AIR THROUGH TWO OPENINGS

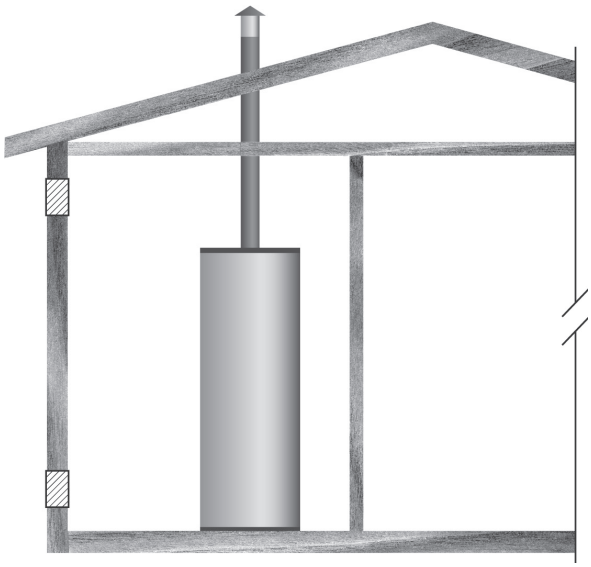

Figure 9

The confined space shall be provided with two permanent openings, one commencing within 12 inches (300 mm) of the top and one commencing within 12 inches (300 mm) of the bottom of the enclosure. The openings shall communicate directly with the outdoors. See Figure 9.

Each opening shall have a minimum free area of 1 square inch per 4,000 Btu/hr (550 mm2 per kW) of the aggregate input rating of all appliances installed in the enclosure. Each opening shall not be less than 100 square inches (645 cm2).

OUTDOOR AIR THROUGH ONE OPENING

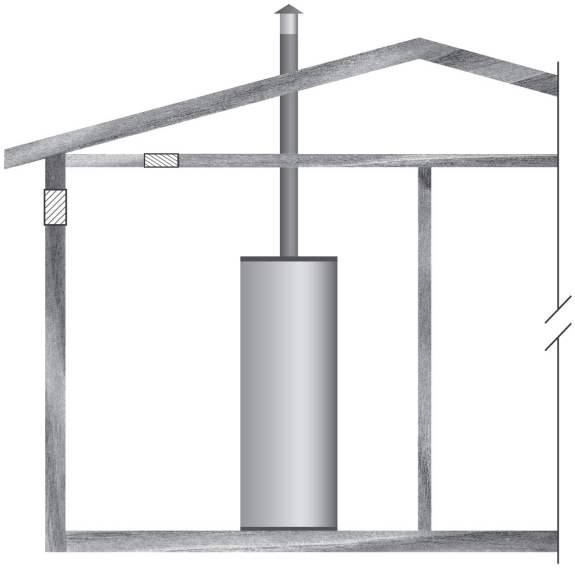

Figure 10

Alternatively a single permanent opening, commencing within 12 inches (300 mm) of the top of the enclosure, shall be provided. See Figure 10. The water heater shall have clearances of at least 1 inch (25 mm) from the sides and back and 6 inches (l50 mm) from the front of the water heater. The opening shall directly communicate with the outdoors or shall communicate through a vertical or horizontal duct to the outdoors or spaces that freely communicate with the outdoors and shall have a minimum free area of the following:

1. 1 square inch per 3000 Btu/hr (733 mm2 per kW) of the total input rating of all appliances located in the enclosure, and
2. Not less than the sum of the areas of all vent connectors in the space.

OUTDOOR AIR THROUGH TWO HORIZONTAL DUCTS

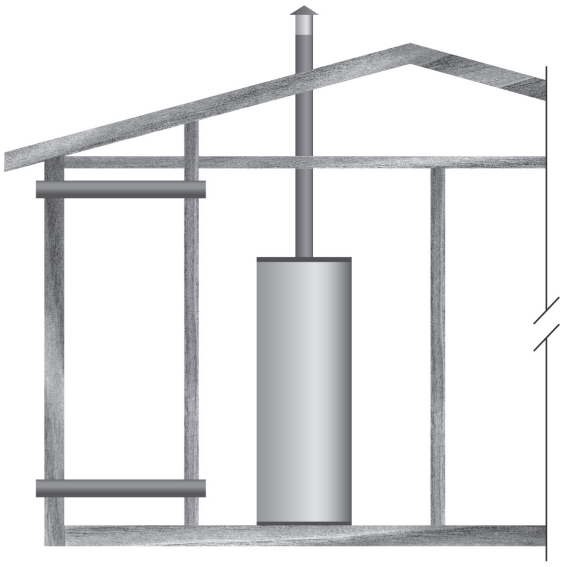

Figure 11

The confined space shall be provided with two permanent horizontal ducts, one commencing within 12 inches (300 mm) of the top and one commencing within 12 inches (300 mm) of the bottom of the enclosure. The horizontal ducts shall communicate directly with the outdoors. See Figure 11.

Each duct opening shall have a minimum free area of 1 square inch per 2,000 Btu/hr (1100 mm2 per kW) of the aggregate input rating of all appliances installed in the enclosure.

When ducts are used, they shall be of the same cross sectional area as the free area of the openings to which they connect. The minimum dimension of rectangular air ducts shall be not less than 3 inches.

OUTDOOR AIR THROUGH TWO VERTICAL DUCTS

The illustrations shown in this section of the manual are a reference for the openings that provide fresh air into confined spaces only.

DO NOT refer to these illustrations for the purpose of vent installation. See Venting Installation on page 21 for complete venting installation instructions.

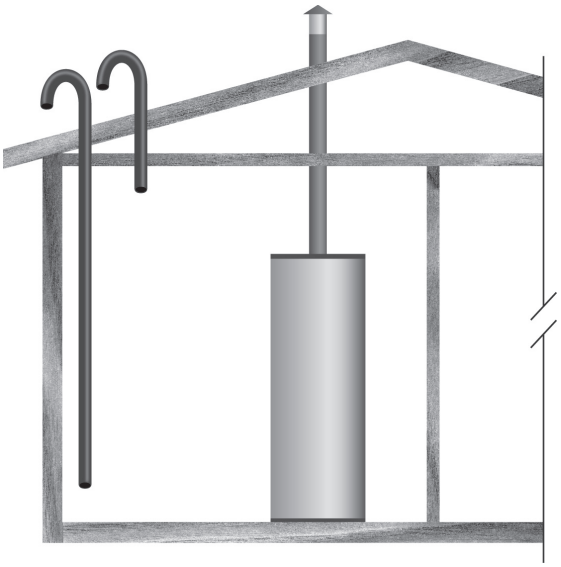

Figure 12

The confined space shall be provided with two permanent vertical ducts, one commencing within 12 inches (300 mm) of the top and one commencing within 12 inches (300 mm) of the bottom of the enclosure. The vertical ducts shall communicate directly with the outdoors. See Figure 12.

Each duct opening shall have a minimum free area of 1 square inch per 4,000 Btu/hr (550 mm2 per kW) of the aggregate input rating of all appliances installed in the enclosure.

When ducts are used, they shall be of the same cross sectional area as the free area of the openings to which they connect. The minimum dimension of rectangular air ducts shall be not less than 3 inches (7.62 cm).

AIR FROM OTHER INDOOR SPACES

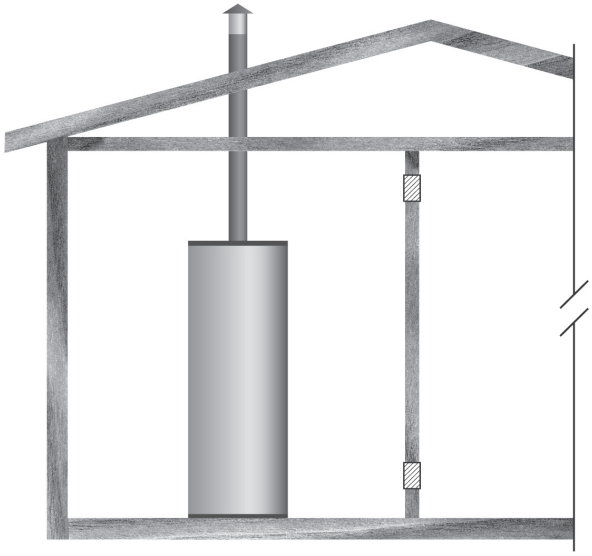

Figure 13

The confined space shall be provided with two permanent openings, one commencing within 12 inches (300 mm) of the top and one commencing within 12 inches (300 mm) of the bottom of the enclosure. See Figure 13.

Each opening shall communicate directly with an additional room(s) of sufficient volume so that the combined volume of all spaces meets the criteria for an Unconfined Space.

Each opening shall have a minimum free area of 1 square inch per 1,000 Btu/hr (2200 mm2 per kW) of the aggregate input rating of all appliances installed in the enclosure. Each opening shall not be less than 100 square inches (645 cm2).

INSTALLATION REQUIREMENTS - COMMONWEALTH OF MASSACHUSETTS

COMMONWEALTH OF MASSACHUSETTS

For all side wall terminated, horizontally vented power vent, direct vent, and power direct vent gas fueled water heaters installed in every dwelling, building or structure used in whole or in part for residential purposes, including those owned or operated by the Commonwealth and where the side wall exhaust vent termination is less than seven (7) feet above finished grade in the area of the venting, including but not limited to decks and porches, the following requirements shall be satisfied:

INSTALLATION OF CARBON MONOXIDE DETECTORS

At the time of installation of the side wall horizontal vented gas fueled equipment, the installing plumber or gasfitter shall observe that a hard wired carbon monoxide detector with an alarm and battery back-up is installed on the floor level where the gas equipment is to be installed. In addition, the installing plumber or gasfitter shall observe that a battery operated or hard wired carbon monoxide detector with an alarm is installed on each additional level of the dwelling, building or structure served by the sidewall horizontal vented gas fueled equipment. It shall be the responsibility of the property owner to secure the services of qualified licensed professionals for the installation of hard wired carbon monoxide detectors.

In the event that the side wall horizontally vented gas fueled equipment is installed in a crawl space or an attic, the hard wired carbon monoxide detector with alarm and battery back-up may be installed on the next adjacent floor level.

In the event that the requirements of this subdivision can not be met at the time of completion of installation, the owner shall have a period of thirty (30) days to comply with the above requirements provided that during said thirty (30) day period, a battery operated carbon monoxide detector with an alarm shall be installed.

APPROVED CARBON MONOXIDE DETECTORS

Each carbon monoxide detector as required in accordance with the above provisions shall comply with NFPA 720 and be ANSI/ UL 2034 listed and CSA certified.

SIGNAGE

A metal or plastic identification plate shall be permanently mounted to the exterior of the building at a minimum height of eight (8) feet above grade directly in line with the exhaust vent terminal for the horizontally vented gas fueled heating appliance or equipment. The sign shall read, in print size no less than one-half (1/2) inch in size, **"GAS VENT DIRECTLY BELOW. KEEP CLEAR OF ALL OBSTRUCTIONS."**

INSPECTION

The state or local gas inspector of the side wall horizontally vented gas fueled equipment shall not approve the installation unless, upon inspection, the inspector observes carbon monoxide detectors and signage installed in accordance with the provisions of 248 CMR 5.08(2)(a) 1 through 4.

EXEMPTIONS

The following equipment is exempt from 248 CMR 5.08(2)(a)1 through 4:

1. The equipment listed in Chapter 10 entitled "Equipment Not Required To Be Vented" in the most current edition of NFPA 54 as adopted by the Board; and
2. Product Approved side wall horizontally vented gas fueled equipment installed in a room or structure separate from the dwelling, building, or structure used in whole or in part for residential purposes.

MANUFACTURER REQUIREMENTS - GAS EQUIPMENT VENTING SYSTEM PROVIDED

When the manufacturer of Product Approved side wall horizontally vented gas equipment provides a venting system design or venting system components with the equipment, the instructions provided by the manufacturer for installation of the equipment and the venting system shall include:

1. Detailed instructions for the installation of the venting system design or the venting system components; and
2. A complete parts list for the venting system design or venting system.

MANUFACTURER REQUIREMENTS - GAS EQUIPMENT VENTING SYSTEM NOT PROVIDED

When the manufacturer of a Product Approved side wall horizontally vented gas fueled equipment does not provide the parts for venting the flue gases, but identifies "special venting systems," the following requirements shall be satisfied by the manufacturer:

1. The referenced "special venting system" instructions shall be included with the appliance or equipment installation instructions; and
2. The "special venting systems" shall be Product Approved by the Board, and the instructions for that system shall include a parts list and detailed installation instructions.

A copy of all installation instructions for all Product Approved side wall horizontally vented gas fueled equipment, all venting instructions, all parts lists for venting instructions, and/or all venting design instructions shall remain with the appliance or equipment at the completion of the installation.

VENTING INSTALLATION

⚠ WARNING

Breathing Hazard - Carbon Monoxide Gas

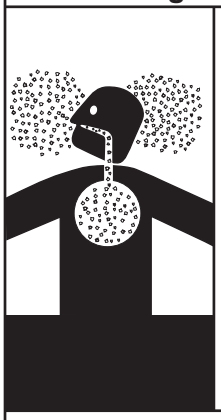

- Install vent system in accordance with codes.
- Do not operate water heater if exposed to flooding or water damage
- Special consideration must be taken with installations above 10,000 feet (3,048 m) refer to high altitude section of this manual.
- Do not operate if soot buildup.
- Do not obstruct water heater air intake with insulating jacket or blanket.
- Do not place chemical vapor emitting products near water heater.
- Gas and carbon monoxide detectors are available.
- Never operate the heater unless it is vented to the outdoors and has adequate air supply to avoid risks of improper operation, fire, explosion or asphyxiation.
- Analyze the entire vent system to make sure that condensate will not become trapped in a section of vent pipe and therefore reduce the open cross sectional area of the vent.

Breathing carbon monoxide can cause brain damage or death.
Always read and understand the instruction manual.

Never operate the water heater unless it is vented to outdoors. The instructions in this section of the manual must be followed to avoid choked combustion or recirculation of flue gases. Such conditions cause sooting of the combustion chamber, burners and flue tubes and creates a risk of asphyxiation.

GENERAL VENTING INFORMATION

The water heaters covered in this manual are Category IV appliances and may be installed in either a Power Vent or Direct Vent configuration.

APPROVED MATERIALS

Approved vent and intake air pipe materials that may be used in the United States:

PVC pipe materials:
- DWV ASTM-D2665 or CSA B181.2
- Schedule 40, 80, 120 ASTM-D1785 or CSA B137.3
- SDR Series ASTM-2241 or CSA B137.3

CPVC pipe materials:
- CPVC 41 ASTM-D2846 or CSA B137.6
- Schedule 40, 80 ASTM-F441 or CSA B137.6
- SDR Series ASTM-F442

Polypropylene - See page 28
- M & G Duravent PolyPro vent system
- Centrotherm InnoFlue vent system

AL29-4C Stainless Steel - See page 29
- HeatFab Saf-T Vent
- Duravent FasNSeal

Approved vent pipe materials that must be used in Canada:
- ULC S636 PVC / CPVC
- ULC S636 Polypropylene - See page 28
- AL29-4C Stainless Steel - See page 29

Approved intake air pipe materials that must be used in Canada:

PVC pipe materials:
- DWV ASTM-D2665 or CSA B181.2
- Schedule 40, 80, 120 ASTM-D1785 or CSA B137.3
- SDR Series ASTM-D2241 or CSA B137.3

CPVC pipe materials:
- CPVC 41 ASTM-D2846 or CSA B137.6
- Schedule 40, 80 ASTM-F441 or CSA B137.6
- SDR Series ASTM-F442

Polypropylene - See page 28
- M & G Duravent PolyPro vent system
- Centrotherm InnoFlue vent system

AL29-4C Stainless Steel - See page 29
- HeatFab Saf-T Vent
- Duravent FasNSeal

NOTE: The use of cellular core PVC (ASTM F891), cellular core CPVC, or Radel® (polyphenolsulfone) in non-metallic venting systems is prohibited. Covering non-metallic vent pipe and fittings with thermal INSULATION IS PROHIBITED.

CATEGORY IV APPLIANCE

Category IV appliances operate with a positive vent (exhaust) static pressure and with vent gas temperatures low enough to produce condensate in the vent piping.

POWER VENT CONFIGURATION

Power Vent configurations derive all combustion air from the room where they are installed and discharge all flue gases to the outdoor atmosphere through a sealed vent (exhaust) pipe. Power vent configurations have one vent pipe connected to the water heater which can be terminated in a vertical or horizontal arrangement. See Figure 42 and Figure 43 on page 35.

DIRECT VENT CONFIGURATION

Direct Vent configurations derive all combustion air directly from the outdoor atmosphere through a sealed intake air pipe and discharge all flue gases to the outdoor atmosphere through a sealed vent (exhaust) pipe. Direct Vent configurations have two pipes connected to the water heater, one vent pipe and one intake air pipe. Direct Vent configurations can be terminated in one of seven different arrangements. See Figure 44 on page 35 through Figure 49 on page 36.

GENERAL VENTING INSTRUCTIONS

These instructions must be followed on all installations.

1. DO NOT install the water heater in a Power Vent configuration unless there is adequate supply of fresh air, see Air Requirements on page 17. If the installation space does not provide an adequate supply of fresh air the water heater must be installed in a Direct Vent configuration.
2. If the water heater is to be installed in a beauty shop, barber shop, cleaning establishment, a laundry with dry cleaning equipment or any space with contaminated air it is imperative that the water heater(s) be installed in a Direct Vent configuration so that all air for combustion is derived from the outdoor atmosphere.
3. The vent and intake air piping must terminate outdoors.
4. The minimum clearance from combustible materials for the vent (exhaust) and intake air piping shall be 0 inches. Vent piping passing through a combustible wall or ceiling must be a continuous run (no joints).
5. The water heater must be protected from freezing downdrafts during shutdown periods.
6. The vent (exhaust) pipe must not be combined or connected to any other appliance's vent system or chimney.
7. The intake air pipe must not be combined or connected to any other appliance's intake air piping.
8. Locate the water heater where the vent (exhaust) and intake air piping will remain within the maximum equivalent lengths allowed. See Venting Requirements on page 22.
9. Do not install the vent or intake air piping in a manner that will allow water to be trapped in the piping.
10. Vent pipes must be pitched a minimum of a 1/4 inch per foot back to the water heater (to allow drainage of condensate).
11. Do not anchor the vent or intake air pipe directly to framed walls, floors or ceilings unless rubber isolation pipe hangers are used to prevent vibration noise from being transmitted.
12. Use only approved vent/intake air pipe sizes and materials. See Venting Requirements on page 22.
13. Use only factory supplied vent and intake air, concentric or low profile terminations. See the Venting Requirements on page 22.
14. Do not locate the vent (exhaust) or intake air terminations where they would be objectionable due to noise at the termination(s). This includes locations close to or across from windows and doors.
15. Direct venting into dead air spaces such as alleys, atriums, and inside corners can cause recirculation of flue gases. Recirculation of flue gases will cause sooting, premature failure of the heat exchanger and icing of the combustion air intake during severe cold weather. To prevent the recirculation of flue gases, maintain as much distance as possible between the intake air and vent terminations.
16. Do not locate the vent termination over a public area where condensate or vapor can cause a nuisance or ice hazard.
17. Ensure the screens in the factory supplied terminations are securely installed to prevent blockage in the vent system.

18. Stress levels in pipe/fittings can be significantly increased by improper installation. If rigid pipe clamps are used to hold the pipe in place, or if the pipe cannot move freely through a wall penetration, the pipe may be stressed, or high thermal stresses may be formed when the pipe heats up and expands. Install accordingly to minimize such stresses.
19. Ensure the intake air connection Tee fitting is oriented properly, see page Intake Air Connection section for instructions.
20. Carefully read the Venting Requirements on page 22 and then proceed to the Venting Installation Sequence on page 23.

INTAKE AIR CONNECTION

The water heaters covered in this manual are factory equipped with a unique Combustion Blower and intake air connection Tee fitting. The Tee is a 3" x 3" x 1/2" fitting. The intake air connection Tee fitting has a hose barb installed in the 1/2 inch branch to connect the Blocked Intake Air switch sensing tube, see Figure 14.

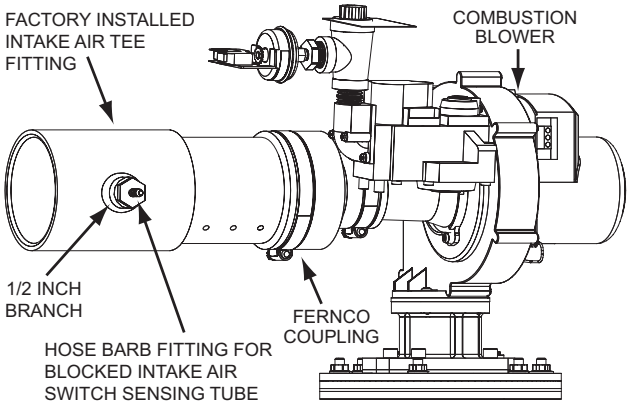

COMBUSTION BLOWER ASSEMBLY

Figure 14

Ensure the hose barb installed in the Tee fitting **IS NOT** facing down towards the ground (180° - 6 o'clock position) before venting installation begins. The barb fitting must be angled between 90° and no more than 130° as shown in Figure 15. If the barb fitting is facing down, residual condensate that occasionally forms in the intake air pipe can drain into the Blocked Intake Air switch through the attached sensing tube and damage the switch. This condition can also lead to Blocked Intake Air fault conditions and associated control system lock outs.

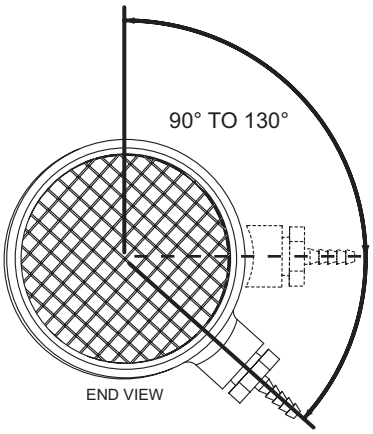

CORRECT ORIENTATION
INTAKE AIR TEE FITTING

Figure 15

The intake air Tee fitting is factory installed with the 1/2 inch branch and hose barb angled to the right at approximately 130° when viewed from the end, see Figure 15. The Tee fitting's 1/2 inch branch and hose barb must not be angled any lower (towards the ground) than this factory specification. Angling higher, up to a 90° position, will not adversely affect operation and is acceptable.

INSPECT/ADJUST INTAKE AIR TEE FITTING

Inspect the angle of the Tee fitting's 1/2 inch branch and hose barb while viewing from the end of the Tee, see Figure 15. If the angle of the Tee fitting 1/2 inch branch and hose barb is lower than shown, adjustment will be necessary. To adjust the intake air Tee fitting angle follow the steps listed below.

Adjustment Procedure:

21. Ensure the water heater is turned off at the on/off switch on the front of the water heater.
22. Disconnect the Blocked Intake Air switch sensing tube, see Figure 3 on page 8 for location.
23. Loosen the large hose clamp on the Fernco coupling that connects the intake air connection pipe to the Combustion blower, see Figure 16.
24. Adjust the angle of the Tee fitting so that the 1/2 inch branch and hose barb are at the proper angle as shown in Figure 15.
25. Retighten the large hose clamp on the Combustion Blower intake air Fernco coupling,
26. Reconnect the Blocked Intake Air switch sensing tube making sure the sensing tube is securely connected at both ends and is not kinked.

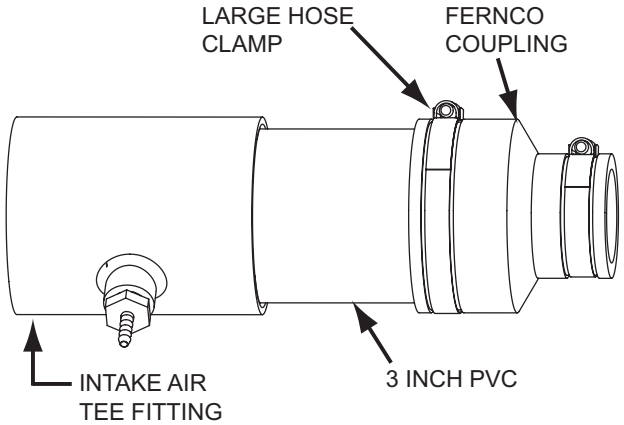

INTAKE AIR CONNECTION PIPE

Figure 16

VENTING REQUIREMENTS

FIELD SUPPLIED FITTINGS

Field supplied fittings should be equivalent to the piping material being installed. Field installed/supplied fittings will add equivalent feet to the vent or intake air piping as indicated below. All field supplied/installed fittings and piping must be factored into the equivalent feet calculations.

- 90° elbows (short or long radius) are equivalent to 5 linear feet (152 cm) of pipe.
- 45° elbows (short or long radius) are equivalent to 2.5 linear feet (76 cm) of pipe.

PRIMER AND CEMENT

Tetrahydrofuran (THF) primer should be used to prepare the surfaces of pipe and fittings for solvent welding. If CPVC or ABS pipe and fittings are used, then the proper cement must be used for all joints,

including joining the pipe to the factory provided terminations (PVC material). PVC Materials should use ASTM D-2564 Grade Cement; CPVC Materials should use ASTM F-493 Grade Cement and ABS Materials should use ASTM D-2235 Grade Cement.

PIPE SIZE REQUIREMENTS

The water heaters covered in this manual are certified for the use of 3 and 4 inch pipe for the vent (exhaust) and intake air piping. If the installed equivalent length for the intake air or vent piping will be 50 feet (15.2 m) or less, 3 inch pipe must be used. If the installed equivalent length will be more than 50 feet (15.2 m), 4 inch pipe must be used.

NOTE: Install the pipe size required for the installed equivalent length of each pipe independently. IE: If the intake air pipe will be 50 equivalent feet or less and the vent pipe will be more than 50 equivalent feet; the intake air pipe must be installed using 3 inch pipe and the vent must be installed using 4 inch pipe.

MAXIMUM EQUIVALENT LENGTHS

Three Inch Pipe

The water heaters covered in this manual are certified to a maximum length of 3 inch pipe for the exhaust venting arrangement of 50 equivalent feet (15.2 m). The certified maximum length of 3 inch pipe for intake air piping is also 50 equivalent feet (15.2 m). IE: On Direct Vent installations both pipes can be up to 50 equivalent feet (15.2 m).

Four Inch Pipe

The water heaters covered in this manual are certified to a maximum length of 4 inch pipe for the exhaust venting arrangement of 120 equivalent feet (36.5 m). The certified maximum length of 4 inch pipe for intake air piping is also 120 equivalent feet (36.5 m). IE: On Direct Vent installations both pipes can be up to 120 equivalent feet (36.5 m).

MINIMUM EQUIVALENT LENGTHS

Three Inch Pipe

The water heaters covered in this manual are certified to a minimum length of 3 inch pipe for the vent (exhaust) of 7 equivalent feet (2.1 m). There is no minimum equivalent feet requirement for the intake air pipe.

Four Inch Pipe

The water heaters covered in this manual are certified to a minimum length of 4 inch pipe for the vent (exhaust) of 50 equivalent feet (15.2 m). There is no minimum equivalent feet requirement for the intake air pipe.

MAXIMUM NUMBER OF ELBOWS

Three Inch Pipe

The vent pipe may have a maximum of four 90° elbows installed when 3 inch pipe is being used. The intake air pipe may also have a maximum of four 90° elbows installed. IE: in a Direct Vent configuration each pipe can have up to four 90° elbows installed.

NOTE: Refer to Tables 9 and 10 on page 29 for the equivalent linear pipe length of AL29-4C® 45° and 90° elbows.

Four Inch Pipe

The vent pipe may have a maximum of six 90° elbows installed when 4 inch pipe is being used. The intake air pipe may also have a maximum of six 90° elbows installed. IE: in a Direct Vent configuration each pipe can have up to six 90° elbows installed.

FACTORY SUPPLIED FITTINGS

The water heater ships with two (2) factory supplied 3 inch terminations (PVC 45° elbows with debris screen). Factory supplied vent and intake air terminations, concentric, or low profile terminations must be used. Factory supplied terminations and installed fittings (exhaust/condensate elbow and intake air connection) add zero equivalent feet to the vent and intake air piping.

TABLE 6 - PVC/CPVC and Polypropylene

Number of 90° Elbows Installed	3 Inch Pipe Maximum Feet (Meters)	4 Inch Pipe Maximum Feet (Meters)
One (1)	45 feet (13.7 meters)	115 feet (35.0 meters)
Two (2)	40 feet (12.2 meters)	110 feet (33.5 meters)
Three (3)	35 feet (10.7 meters)	105 feet (32.0 meters)
Four (4)	30 feet (9.1 meters)	100 feet (30.5 meters)
Five (5)	N/A	95 feet (29.0 meters)
Six (6)	N/A	90 feet (27.4 meters)

NOTE: Refer to Tables 9 and 10 on page 29 for the equivalent linear pipe length of AL29-4C® 45° and 90° elbows.

4 INCH EXTENDED VENT TERMINATIONS

When 4 inch intake air or vent pipe is installed, factory supplied 4 inch terminations must be used. Contact your local distributor or call the parts department (phone number listed on the back cover of this manual) to order 4 inch termination(s).

OPTIONAL CONCENTRIC & LOW PROFILE TERMINATIONS

The water heaters covered by this manual may be installed in a Direct Vent configuration using a 4 inch concentric termination or a 3" or 4" low profile termination.

Concentric and Low Profile terminations must be ordered separately. Contact your local distributor or call the parts department phone number listed on the back cover of this manual to order.

Concentric & Low Profile Vent Termination Part Numbers:

- 4" Concentric Termination # 9006328005 (used for both 3" and 4" diameter piping)
- 3" Low Profile Termination # 9008933005
- 4" Low Profile Termination # 9008934005

COMMON VENTING

The water heaters covered by this manual may be installed using a common horizontal direct vent kit. Contact your local distributor or call the parts department phone number listed on the back cover of this manual for more information or to order.

VENTING INSTALLATION SEQUENCE

1. Read General Venting Instructions on page 21 and Venting Requirements on page 22 before proceeding. These instructions and requirements must be followed on all installations.
2. Determine whether the water heater will be installed in a Power Vent or Direct Vent configuration and which vent system arrangement will be used for the installation. See the various venting arrangements on pages 35 and 36.
3. Proceed to the applicable instructions:
   - Power Vent Installation on page 23.
   - Direct Vent Installation on page 24.

POWER VENT INSTALLATION

1. Read the General Venting Instructions on page 21 and Venting Requirements on page 22 before proceeding. These instructions and requirements must be followed in addition to the instructions below that are specific for Power Vent configurations.
2. Determine which Power Vent arrangement will be used for the installation; vertical or horizontal termination. See Figure 42 and Figure 43 on page 35.
3. Determine the vent pipe size for the installation, see Venting Requirements on page 22.
4. Plan the layout of the vent piping backwards from the termination point outdoors to the water heater. Layout the vent piping to use a minimum of pipe and elbows.
5. Install the termination first.

If the vent piping will terminate vertically, through a roof, see Vertical Termination Installation on page 25.

If the vent piping will terminate horizontally, through a sidewall, see Sidewall Termination Installation on page 27.

6. When installation of the termination is complete install necessary piping and fittings to route the vent piping back to the water heater.
7. The vent pipe shall be supported properly to avoid bending or failure. The water heater manufacturer recommends that the vent pipe be supported every 5 feet (152 cm) of vertical run and every 3 feet (91 cm) of horizontal run.
8. Do not install the vent piping in a manner that will allow water to be trapped in the piping.

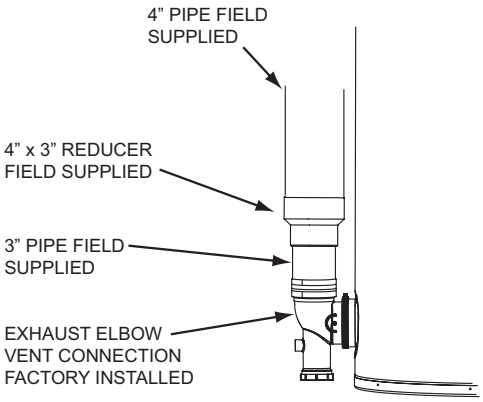

VENT (EXHAUST) CONNECTION

Figure 17

9. All vent (exhaust) pipes shall be pitched a minimum of a 1/4 inch per foot back to the water heater (to allow drainage of condensate).
10. If installing 3 inch vent pipe connect the vent pipe to the exhaust elbow on the water heater.
11. If installing 4 inch pipe transition to 3 inch pipe at the exhaust elbow on the water heater as shown in Figure 17. The field installed 3” pipe between the exhaust elbow and the 4” x 3” reducer coupling should be 18 inches (45 cm) or less in length.

DIRECT VENT INSTALLATION

1. Read the General Venting Instructions on page 21 and Venting Requirements on page 22 before proceeding. These instructions and requirements must be followed in addition to the instructions below that are specific for Direct Vent configurations.
2. Determine which Direct Vent arrangement will be used for the installation. There are seven (7) Direct Vent arrangement options. See Figures 44 through 50.
3. Determine vent and intake air pipe size to be used for the installation; see Venting Requirements on page 22.
4. Plan the layout of the vent and intake air piping backwards from the termination point outdoors to the water heater. Layout the vent and intake air piping to use a minimum of pipe and elbows.
5. Install the terminations first.

   If standard terminations are being used and the intake air or vent piping will terminate vertically, through a roof, see Vertical Termination Installation on page 25.

   If standard terminations are being used and the intake air or vent piping will terminate horizontally, through a sidewall, see Sidewall Termination Installation on page 27.

   If a concentric termination(s) will be used see Concentric Termination Installation on page 30.

   If a low-profile termination will be used see Low Profile Termination Installation on page 34.

6. When installation of the termination(s) is complete Install necessary piping and fittings to route the intake air and vent piping back to the water heater.
7. The intake air and vent piping shall be supported properly to avoid bending or failure. The water heater manufacturer recommends that the vent and intake air piping be supported every 5 feet (152 cm) of vertical run and every 3 feet (91 cm) of horizontal run.
8. Do not install the vent or intake air piping in a manner that will allow water to be trapped in the piping.
9. A field supplied condensate Tee fitting and drain hose shall be installed in the intake air piping near the water heater in colder climates with heavy snow accumulations and in areas that regularly experience high humidity. The drain hose should be routed to an adequate floor drain separate from any other condensate drains. See Figure 20 on page 25.

   NOTE: Snow being pulled into the intake air piping and then melting can lead to excessive amounts of water accumulation and damage water heater components. Warm, humid outdoor air can lead to excessive condensation inside the intake air piping and may also damage water heater components.

10. The intake air and vent (exhaust) piping must be pitched a minimum of a 1/4 inch per foot back to the water heater (to allow drainage of condensate).
11. If installing 3 inch vent pipe connect the vent pipe to the exhaust elbow on the water heater.
12. If installing 4 inch vent pipe transition to 3 inch pipe at the exhaust elbow on the water heater as shown in Figure 17 on page 24. The field installed 3” pipe between the exhaust elbow and the 4” x 3” reducer coupling should be 18 inches (45 cm) or less in length.
13. Ensure the Intake Air Screen on the Intake Air Connection to the water heater is removed before connecting the intake air pipe to the water heater. See Figure 18.

⚠ WARNING

Breathing Hazard - Carbon Monoxide Gas

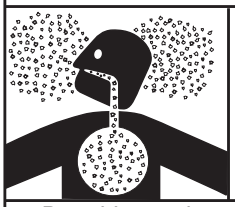

- Do not obstruct water heater air intake.
- Gas and carbon monoxide detectors are available.
- Install water heater in accordance with the instruction manual.

Breathing carbon monoxide can cause brain damage or death. Always read and understand instruction manual.

NOTE: Do not leave the screen inside the Intake Air Connection for Direct Vent installations. Once the intake air pipe is installed the screen will be hidden from view and may become clogged with debris over time. This will cause improper combustion and may also lead to Blocked Intake Air fault conditions and associated control system lock outs.

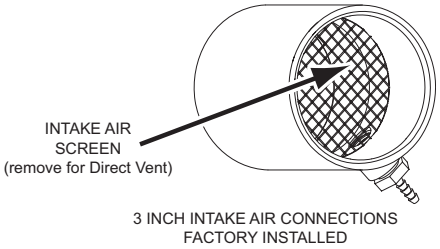

INTAKE AIR SCREEN
Figure 18

14. If installing 3 inch intake air pipe connect the intake air pipe to the intake air connection on the water heater.
15. If installing 4 inch intake air pipe transition to 3 inch pipe at the intake air connection on the water heater as shown in Figure 19. The field installed 3" pipe between the intake air connection and the 4" x 3" reducer coupling should be 18 inches (45 cm) or less in length.

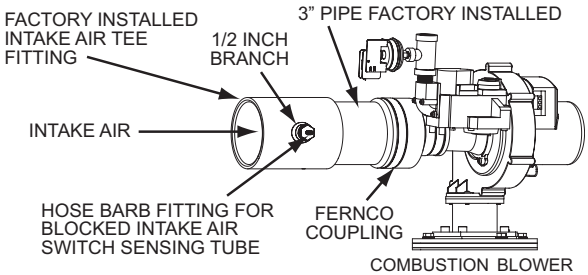

INTAKE AIR CONNECTION
Figure 19

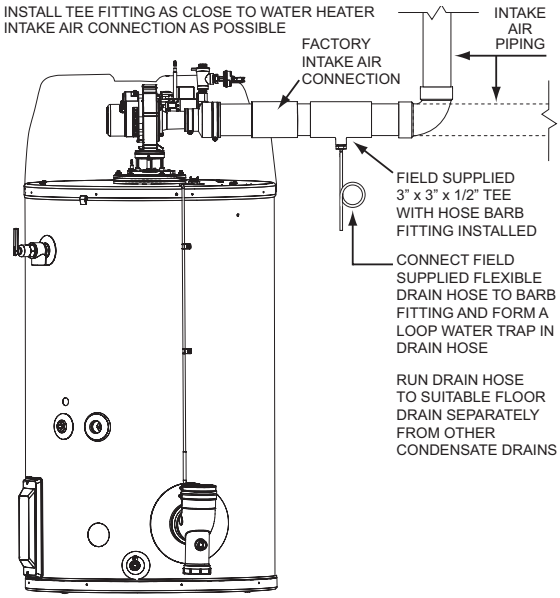

INTAKE AIR CONDENSATE TEE INSTALLATION
Figure 20

DIRECT VENT AIR INTAKE MOISTURE PROTECTION

The air intake piping in a direct vent system will normally not have any moisture accumulation in it. However, in certain cases, moisture may build up and needs to be drained. Typical situations include, but are not limited to:

- Cold outdoor temperature, particularly if the air inlet is short,
- Heater being used mostly for space heating and
- Air inlet pipe has vertical rise near the heater.

Installations with any of these conditions are required to provide a moisture drain with a trap that flows to a waste drain. See Figure 20. A horizontal section of the air inlet pipe, near the heater should include a 3" by 3" by 1/2" tee and a hose barb fitting to drain the water. The tee should be as close to the heater as is practical. The drain tubing in any installation should have a loop trap and flow to an appropriate waste drain. The air intake drain line must be entirely separate from the exhaust vent outlet condensate line.

VERTICAL TERMINATION INSTALLATION

1. Determine the location for the termination(s).
2. If installing only the vent (exhaust) piping in a Power Vent configuration vertically through the roof; ensure that all exterior vertical clearance requirements shown in Figure 22 and Figure 23 on page 26 are being maintained. These clearances and those cited by local and national codes must be maintained.

   NOTE: On flat roof installations the vent termination must be a minimum of 24 inches (60 cm) above any parapet, vertical wall or structure within 10 feet (3 m) horizontally. See Figure 23 on page 26.
3. If installing both intake air and vent piping in a Direct Vent configuration vertically through the roof; ensure that all exterior vertical clearance requirements shown in Figure 22 and Figure 23 on page 26 are being maintained. These clearances and those cited by local and national codes must be maintained.

   NOTE: On flat roof installations the intake air and the vent terminations must be a minimum of 24 inches (60 cm) above any parapet, vertical wall or structure within 10 feet (3 m) horizontally. See Figure 23 on page 26.
4. If installing only vent piping in a Power Vent configuration vertically through the roof the following instructions must be followed:

   The vent termination must be oriented facing downward as shown in Figure 22 and Figure 23 on page 26.

   The bottom edge of vent termination must be a minimum of 12 inches (30 cm), 18 inches (45 cm) in Canada, above average or expected snow level as shown in Figure 22 on page 26.
5. If installing both intake air and vent piping in a Direct Vent configuration vertically through the roof the following instructions must be followed:

   The intake air and vent pipes must penetrate the same side of the roof as shown in Figure 24 on page 26.

   The intake air and vent terminations must be oriented facing downward and in the same direction as shown in Figure 24 on page 26.

   The intake air and vent terminations must have a minimum separation of 24" (61 cm) measured on center line as shown in Figure 24 on page 26. In colder climates this separation should be increased to at least 48 inches (122 cm).

   The bottom edge of the intake air and vent terminations must be a minimum of 12 inches (30 cm), 18 inches (45 cm) in Canada, above the average or expected snow level as shown in Figure 22 and Figure 24 on page 26.
6. When the intake air and/or vent piping from multiple water heaters will terminate in the same location the vent terminations can be grouped together in close proximity 0 inches/touching. Intake air terminations can also be grouped together in close proximity 0 inches/touching.

   The distance between the closest vent and intake air terminations must be a minimum of 24 inches (61 cm) as shown in Figure 24 on page 26. In colder climates this separation should be increased to at least 48 inches (122 cm).
7. Cut a 4 inch (10 cm) diameter hole for 3 inch pipe or 5 inch (13 cm) diameter hole for 4 inch pipe where the pipe(s) will pass through the roof.

   NOTE: Beware of concealed wiring and piping when cutting through the roof.

8. Suspend the pipe(s) through center of hole using field supplied metal strapping or equivalent support materials as shown in Figure 22 on page 26.
9. Slide a roof boot or equivalent flashing over the pipe and secure roof boot or equivalent flashing to roof and seal around the flashing as shown in Figure 22, Figure 23 and Figure 24 on page 26.
10. Install the factory supplied intake air and/or vent termination(s) using field supplied pipe and one field supplied 90° elbow as shown in Figure 22 on page 26. The short section of pipe that connects between the field supplied 90° elbow and the factory supplied termination must not be excessive in length. The exposed portion of this pipe shall be no more than 2 inches (5 cm), see Figure 22 on page 26.
11. Return to Power Vent Installation on page 23 or Direct Vent Installation on page 24 to complete the installation of the intake air and/or vent piping between the termination(s) and the water heater.

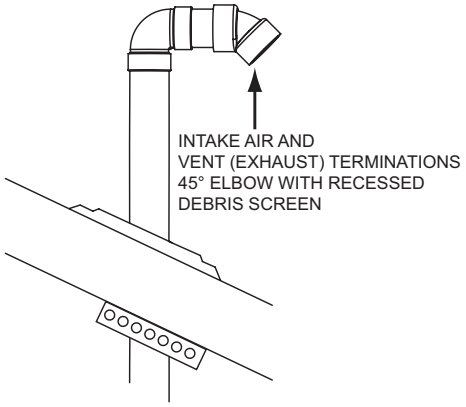

STANDARD FACTORY SUPPLIED TERMINATIONS

Figure 21

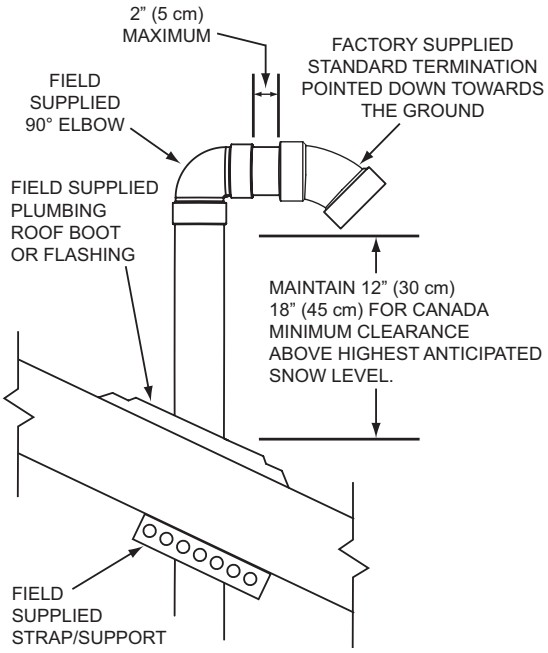

VERTICAL TERMINATION(S) INSTALLATION
INTAKE AIR AND/OR VENT (EXHAUST)

Figure 22

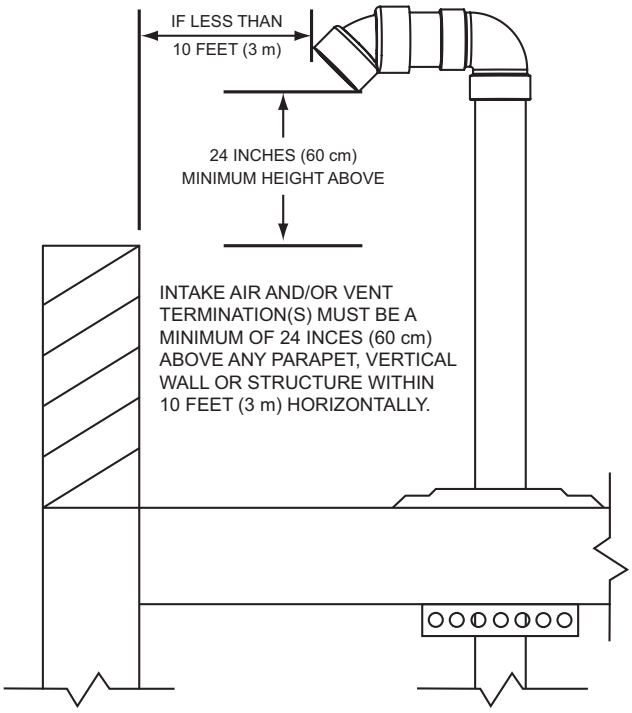

VERTICAL TERMINATION(S) FLAT ROOF CLEARANCE
INTAKE AIR AND/OR VENT (EXHAUST)

Figure 23

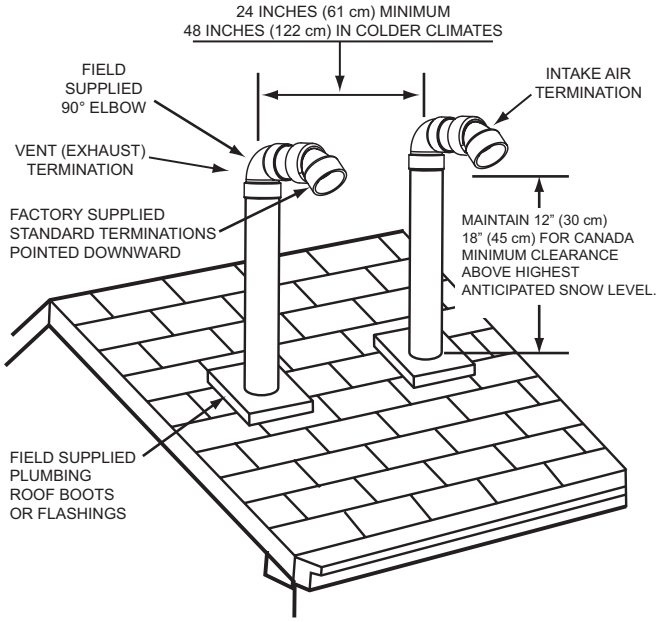

VERTICAL TERMINATION - DIRECT VENT
STANDARD TERMINATIONS

Figure 24

SIDEWALL TERMINATION INSTALLATION

12. Determine the location for the termination(s).
13. If installing only vent (exhaust) piping in a Power Vent configuration through a sidewall; ensure that all exterior sidewall clearance requirements for the termination, shown in Figure 51 on page 37, are being maintained. These clearances and those cited by local and national codes must be maintained.
14. If installing both the intake air and the vent piping in a Direct Vent configuration through a sidewall; ensure that all exterior sidewall clearance requirements for the terminations, shown in Figure 52 on page 38, for the vent and the intake air termination are being maintained. These clearances and those cited by local and national codes must be maintained.
15. If installing both an intake air and vent termination in a Direct Vent configuration through a sidewall there must be a minimum of 24 inches (61 cm) separation, measured on vertical center line, between the intake air and vent terminations, see Figure 25.

    NOTE: In colder climates this separation should be increased to at least 48 inches (122 cm) between the intake air and vent termination or any other appliance vent that discharges moisture-laden air such as clothes dryers. This will reduce possibility of frost over from side winds blowing exhaust vapors to the intake air termination and is recommended for Canadian installations.
16. If installing both intake air and vent terminations in a Direct Vent configuration through a sidewall the intake air and vent terminations must be installed at the same elevation measured on horizontal center line - see Figure 25.

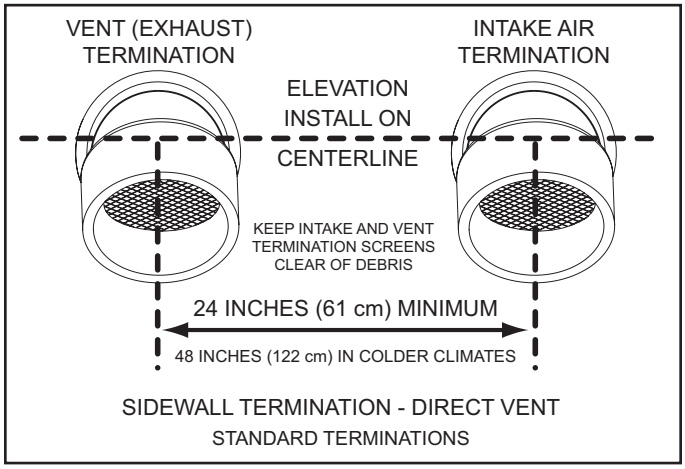

Figure 25

17. When the intake air and/or vent piping from multiple water heaters will terminate at the same location through a sidewall, the vent terminations can be grouped together in close proximity - 0 inches/touching. The intake air terminations can also be grouped together in close proximity - 0 inches/touching.

    However, the distance between the closest vent and intake air terminations must be a minimum of 24 inches (61 cm). In colder climates this separation should be increased to at least 48 inches (122 cm). See Figure 25.
18. Cut a 4 inch (10 cm) diameter hole for 3 inch pipe or 5 inch (13 cm) diameter hole for 4 inch pipe where the pipe(s) will pass through the wall.

    NOTE: Beware of concealed wiring and piping when cutting through the wall.
19. Cut a length(s) of pipe being installed 3.5 inches (8.9 cm) to 9.5 inches (24.1 cm) longer than the wall thickness at the opening. See Figure 26.

    NOTE: Vent Termination – exhaust gases of this water heater are less than 140°F. In cold climates water vapor in the exhaust gases will condense into a cloud of vapor where the vent exits the building. This vapor can gradually discolor exterior building surfaces. The vent termination should be located where this vapor cloud and potential discoloration are not a concern. Extending the exposed vent piping up to a maximum of 6 inches (15.2 cm) from the wall helps vapor from being trapped along a building's face. To avoid this problem, the vent can also be terminated vertically through the roof, see Vertical Termination Installation on page 25.
20. Cement the intake air and/or vent termination to the section(s) of pipe cut to length in the above Step.
21. Slide the included metal wall plate(s) over the pipe(s) to stop against the intake air and/or vent termination. Place some silicone caulking (field supplied) on the back of the wall plate(s) to secure it to the wall.
22. Working from outside, slide the pipe and termination(s) assembled in the above steps through the wall. Ensure the termination(s) is pointed down towards the ground. See Figure 26.

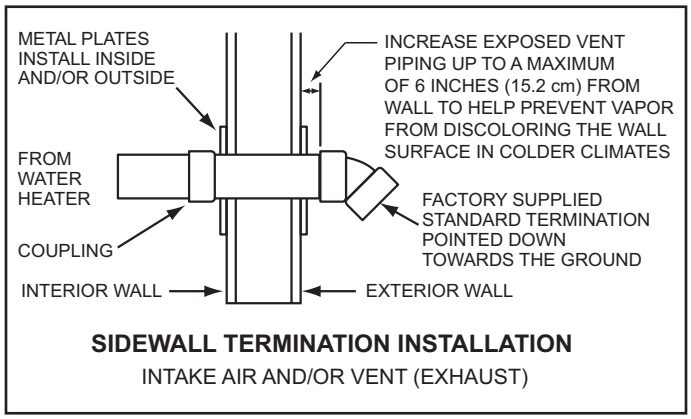

Figure 26

23. Place a bead of silicone caulking (field supplied) around the gap between the installed pipe(s) and the wall. Apply enough to fill the gap between the pipe(s) and wall.
24. Press the wall plate flush against the outside wall.
25. Working from the inside apply enough silicone caulking on the back of the interior wall plate(s) to hold it in place and slide the wall plate over the installed pipe(s).
26. Install a coupling to the end of the pipe(s) inside the building. Before the silicone caulking has time to completely set go outside the building and ensure the termination(s) is still pointing down towards the ground. See Figure 26.
27. Return to Power Vent Installation on page 23 or Direct Vent Installation on page 24 to complete the installation of the intake air and/or vent piping between the termination(s) and the water heater.

POLYPROPYLENE INSTALLATIONS

The water heater has been approved to be installed with Polypropylene vent material as shown in Tables 7 and 8. The approved application of single wall, non-flexible, non-concentric Polypropylene vent material is offered by two specific manufacturers (Centrotherm ECO Systems and DuraVent Polypropylene. These listed products must be installed by following the vent manufacturer's instructions. Refer to Table 6 on Page 23 to determine the maximum pipe length and number of elbows that can be used.

Insulation should not be used on Polypropylene venting materials. The use of insulation will cause increased vent wall temperatures, which could result in vent pipe failure.

Use only the adapters and vent system listed in Tables below. DO NOT mix vent systems of different types or manufacturers. Failure to comply could result in severe personal injury, death, or substantial property damage.

Installations must comply with applicable national, state, and local codes. For Canadian installation, Polypropylene vent must be listed as a ULC-S636 approved system. If Polypropylene vent is not required by your local code, you may use either PVC or CPVC pipes for your water heater that allows non-metallic venting material installations.

Polypropylene vent systems do not use cement to connect the pipe and elbow sections but use a push together gasket seal method. Do not attempt to connect Polypropylene with sealant cement. All vent connections MUST be secured by the vent manufacturer's joint connector. The installer must use a specific vent starter adapter at the flue connection. The adapter is supplied by the vent manufacturer to adapt to its vent system.

In order to be in full compliance with UL 1738 or ULC-S636 and to meet the requirements of the water heater manufacturer, you must use the metal joint connector rings, available from the Polypropylene vent manufacturer, to stiffen the joints of 3" and 4" diameter pipes.

TABLE 7

M & G Duravent PolyPro						
Nominal Pipe Diameter	**Flue Outlet Adapter**	**Adapter Connector**	**Ring Connector**	**90 Degree Elbow**	**Vent Material**	**Terminal(s)**
3"	3PPS-AD	PPS-PAC	3PPS-LB	3PPS-E90B	3PPS	3PPS-E45B for Exhaust; 3PPS-E45B for Intake (Direct Vent only)
4"	4PPS-AD	PPS-PAC	4PPS-LB	4PPS-E90B	4PPS	4PPS-E45B for Exhaust; 4PPS-E45B for Intake (Direct Vent only)

TABLE 8

Centrotherm InnoFlue SW						
Nominal Pipe Diameter	**Flue Outlet Adapter**	**Adapter Connector**	**Ring Connector**	**90 Degree Elbow**	**Vent Material**	**Terminal(s)**
3"	ISAGL 0303	IAFC03	IANS03	ISELL0387	ISVL03	ISELL0345UV for Exhaust; ISELL0345UV for Intake (Direct Vent only)
4"	ISAGL 0404	IAFC04	IANS04	ISELL0487	ISVL04	ISELL0445UV for Exhaust; ISELL0445UV for Intake (Direct Vent only)

AL29-4C® VENT INSTALLATIONS

(AL29-4C® is a registered trademark of Allegheny Technologies, Inc.)

The water heaters covered by this manual are approved to be installed with AL29-4C® stainless steel vent material using parts from the manufacturers listed in Tables 9 and 10 below. These listed systems must be installed using the vent manufacturer's instructions including their listed clearances to combustible and noncombustible materials. Refer to Table 6 on page 23 for the maximum and minimum equivalent linear vent lengths and number of elbows that may be used. However, use Tables 9 and 10 below to find the appropriate equivalent linear vent lengths for the AL29-4C® elbows.

NOTE: The equivalent lengths of the AL29-4C® elbows are different than those from smooth walled plastic vents. Consult Tables 9 and 10 for the correct equivalent linear vent lengths.

Listed vent systems composed of AL29-4C® must not mix parts from the different manufacturers. The joints of these products are sealed by internal gaskets. Do not use any other type of sealant. When assembling these vent systems, follow the vent manufacturer's instructions for cleaning and lubricating the joints, if required. Each section must be locked together using the method supplied by the vent manufacturer.

The water heaters covered by this manual are approved to be installed using the approved vent terminations shown in this manual. This means that, the installer must use the adapter listed in Tables 9 and 10 and a short piece of PVC pipe to complete the end of the vent system with an approved termination. In Canada, the PVC pipe length must be listed to ULC636.

TABLE 9

HeatFab Saf-T Vent AL29-4C® Vent System Parts							
Diameter	**Flue Outlet Adapter**	***Straight Pipe (3' Section)**	**45° Elbow**	**Equivalent Linear Length, 45° Elbow**	**90° Elbow**	**Equivalent Linear length, 90° Elbow**	**Adapter to PVC**
3 inches	9301 PVC	9307	9311	5 feet	9314	10 feet	9353CPVC
4 inches	9401 PVC	9407	9411	5 feet	9414	10 feet	9454CPVC
*Consult vent manufacturer's catalog for other available lengths.							

TABLE 10

Duravent FasNSeal AL29-4C® Vent System Parts							
Diameter	**Flue Outlet Adapter**	***Straight Pipe (3' Section)**	**45" Elbow**	**Equivalent Linear Length, 45" Elbow**	**90° elbow**	**Equivalent Linear Length, 90- Elbow**	**Adapter to PVC**
3"	810005378	FSVL3603	FSELB4503	5 feet	FSELB9003	10 feet	810009530
4"	810005545	FSVL3604	FSELB4504	5 feet	FSELB9004	10 feet	810009529
*Consult vent manufacturer's catalog for other available lengths.							

COMMON VENTING

The water heaters covered by this manual may be installed using a common horizontal direct vent kit. Contact your local distributor or call the parts department phone number listed on the back cover of this manual for more information or to order.

CONCENTRIC TERMINATION INSTALLATION

1. Concentric terminations must be ordered separately. SUF 60120 thru SUF 100250 models must use the 4 inch concentric termination; Part Number: 9006328005 for both 3" & 4" vent diameters. Contact your local distributor or call the parts department phone number on the back cover of this manual to order concentric terminations.
2. Determine the location for the termination.

   NOTE: Roof termination is preferred since it is less susceptible to damage, has reduced chances to intake contaminants and vent vapors are less visible.
3. When installing a concentric termination vertically through the roof; ensure that all exterior vertical clearance requirements for the concentric termination, shown in Figure 29 on page 31 are being maintained. These clearances and those cited by local and national codes must be maintained.
4. When installing a concentric termination vertically through a flat roof, the termination's vent cap must be a minimum of 10 feet (3 m) away from any parapet, vertical wall or structure as shown in Figure 27.

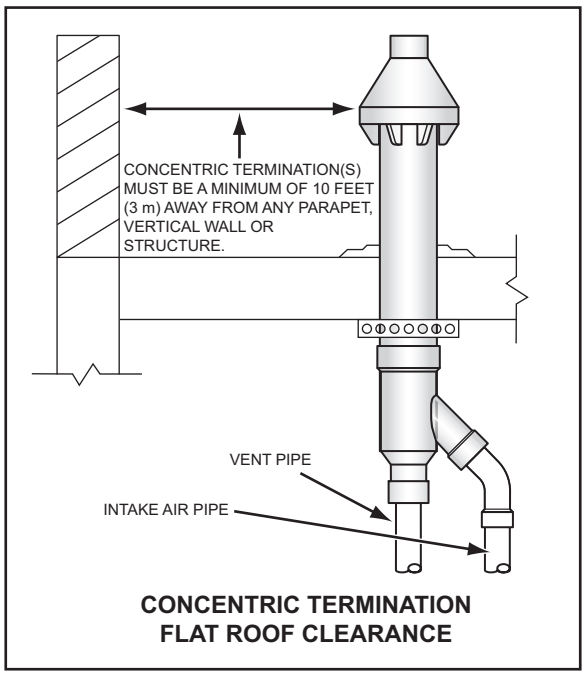

Figure 27

   NOTE: If this required 10 foot (3 m) distance to a parapet, vertical wall or structure cannot be maintained, standard terminations must be used. See Vertical Termination Installation on page 25.
5. When installing a concentric termination through a sidewall; ensure that all exterior sidewall clearance requirements for the termination, shown in Figure 52 on page 38, are being maintained. These clearances and those cited by local and national codes must be maintained.
6. When installing multiple concentric terminations vertically through a roof or horizontally through a sidewall ensure the required clearances between terminations and groupings of multiple terminations are maintained. See pages 32 and 33 for more information.
7. Cut a 5 inch (13 cm) diameter hole for the 4 inch concentric termination where the termination will pass through the wall or roof.

   NOTE: Beware of concealed wiring and piping when cutting through the wall or roof.
8. When installing multiple concentric terminations vertically through the roof in the same location the termination caps for all concentric terminations must be at the same height measured from ground. See Multiple Concentric Termination Arrangements on page 33.
9. Determine if the concentric termination will need to be shortened to accommodate required clearances or to ensure all vent caps are at the same height when installing multiple terminations vertically through the roof in the same location.

   See Figure 28 on page 31 for the minimum lengths allowed for the 4 inch concentric termination.

   NOTE: When shortening the length of the termination carefully measure and cut the larger (intake air) pipe first. Cut the same amount of pipe off of the smaller (vent) pipe.

   NOTE: Lengthening of the Concentric Vent Termination is not permitted.
10. Proceed to 4 Inch Concentric Termination Installation on page 31.

4 INCH CONCENTRIC TERMINATION INSTALLATION

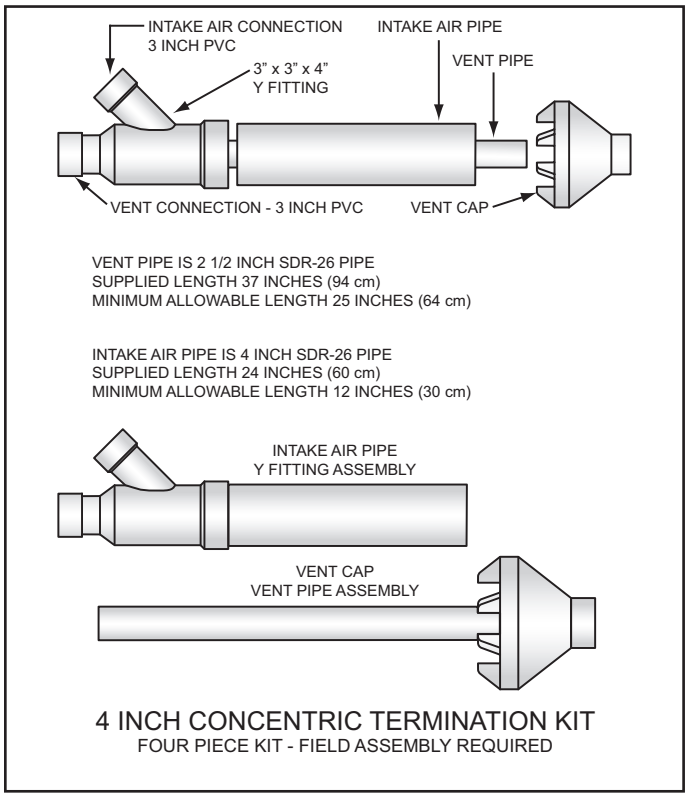

Figure 28

Assemble and install the 4 inch concentric termination. Refer to Figure 28, Figure 29 and Figure 30 for these instructions:

1. Cement the Y fitting to the larger diameter intake air pipe.
2. Slide the intake air pipe and Y fitting assembly from inside the building through the hole cut for the termination in the roof or sidewall. Ensure no foreign materials such as insulation accumulate inside the assembly.
3. Secure the intake air Y fitting assembly using field supplied metal strapping or equivalent support materials.
4. On installations installed through the roof slide a field supplied plumbing boot or roof flashing over the intake air Y fitting assembly and secure it to the roof.
5. Seal around the plumbing boot or roof flashing.
6. Cement the vent cap onto the vent pipe. Alternately a field-supplied stainless steel screw may be used to secure the 2 components together when field disassembly is desired for cleaning. A pilot hole must be drilled for the screw to prevent damage/cracking of the vent cap and/or vent pipe.
7. Install the vent cap/vent pipe assembly into the intake air Y fitting assembly, Ensure small diameter vent pipe is cemented and bottomed in the Y fitting.
8. When installing 3 inch intake air and vent piping connect and cement the pipe directly to the concentric termination. When installing 4 inch intake air and vent pipe - connect the piping to the concentric termination using field supplied 4" x 3" reducer couplings and short sections of 3 inch pipe (18 inches or less) pipe. Do not exceed the maximum equivalent vent length listed on page 23. Cement all fittings and pipe in place.
9. Return to Direct Vent Installation on page 24 to complete the installation of the intake air and vent piping between the concentric termination and the water heater.

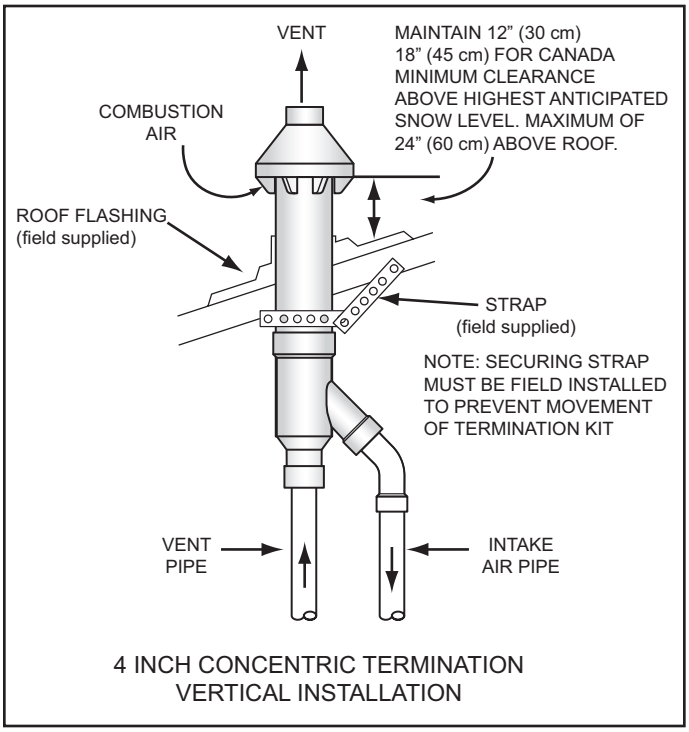

Figure 29

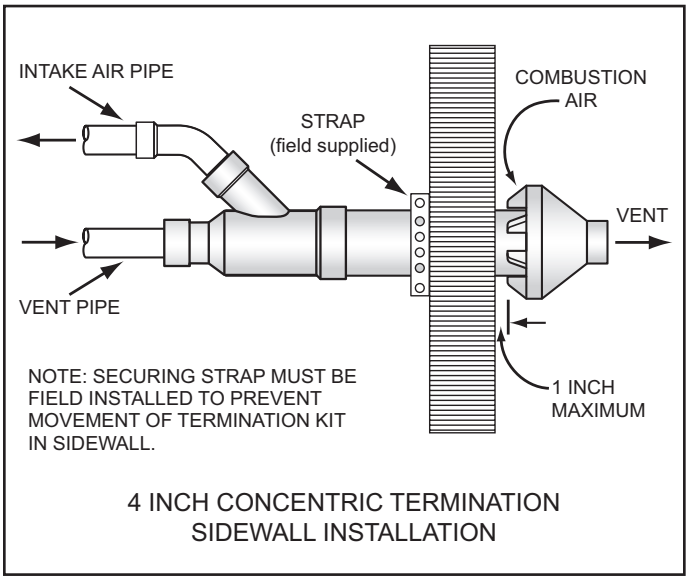

Figure 30

MULTIPLE CONCENTRIC TERMINATION CLEARANCES

When installing multiple concentric terminations vertically through a roof or horizontally through a sidewall ensure the required clearances (separation) between terminations are maintained. Ensure multiple terminations are arranged or grouped as required.

NOTE: These clearances must be maintained to prevent the recirculation of vent (exhaust) gases to the intake air. Clearances are measured between the edges of the concentric termination caps.

When installing multiple concentric terminations through a roof or through a sidewall the clearances shown in Figure 31 must be maintained.

See Multiple Concentric Termination Arrangements on page 33.

Close Proximity & Standard Clearance

1. The clearance between multiple termination caps must be 0 inches (touching) to a maximum of 2 inches (5 cm), dimension A - Figure 31, when installing concentric terminations in close proximity. See Figure 36 on page 33.
2. The clearance between multiple termination caps must be increased to a minimum of 24 inches (61 cm), dimension B - Figure 31, when installation in close proximity (above) is not possible. This is the standard clearance.

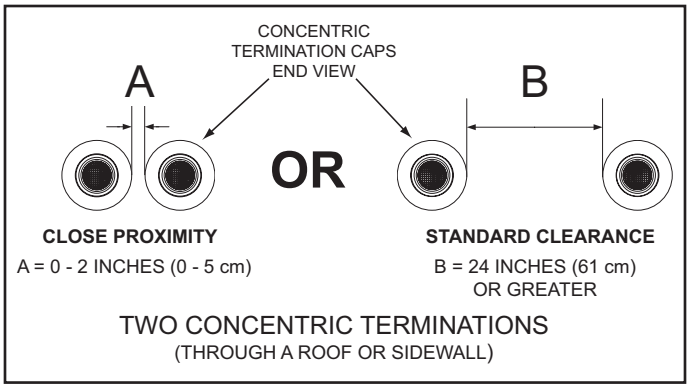

Figure 31

Three Concentric Terminations

1. When installing three concentric terminations through a roof or through a sidewall the third termination may be installed in close proximity as indicated by dimension A in Figure 32.
2. If close proximity installation of the third termination is not possible the third termination may be installed as indicated by dimension B in Figure 32.

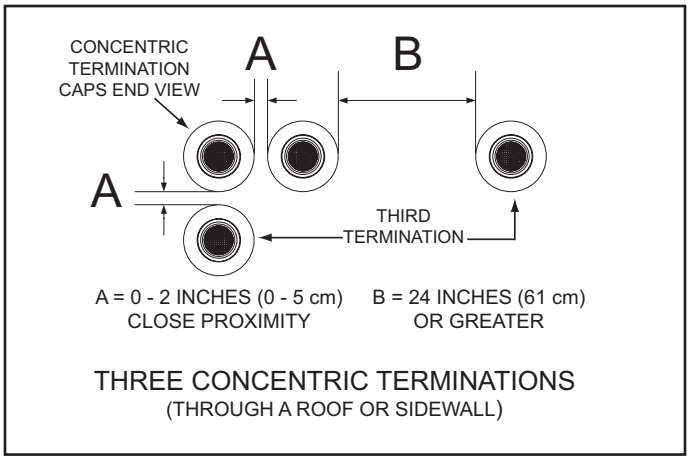

Figure 32

Four Concentric Terminations

1. When installing four concentric terminations through a roof or through a sidewall in close proximity they may be arranged into stacked rows of two as shown in Figure 33 or lateral rows of two as shown in Figure 34.
2. Four is the maximum number of concentric terminations that may be installed in a group where all terminations are in close proximity as shown in Figure 33.

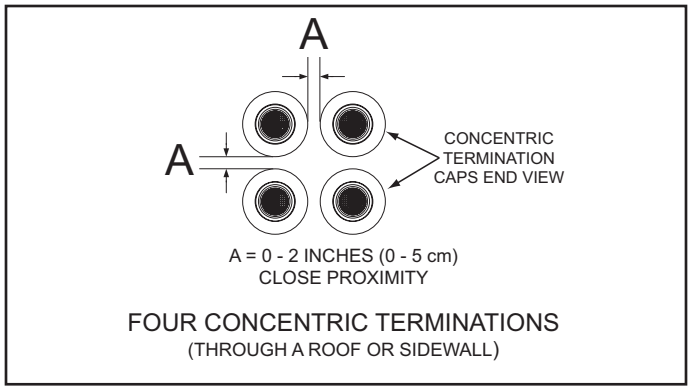

Figure 33

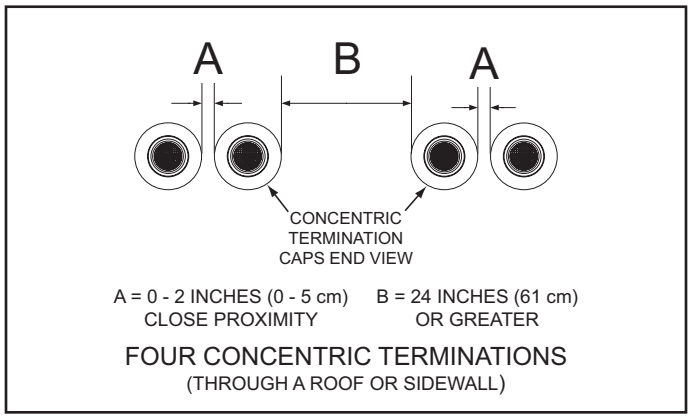

Figure 34

Groups Of Terminations

1. When installing multiple groups of concentric terminations through a roof or through a sidewall in close proximity they can be installed into stacked groups of four as shown in Figure 35. Lateral groups of four as shown in Figure 34 may be a more convenient installation arrangement for multiple groups depending on available space.

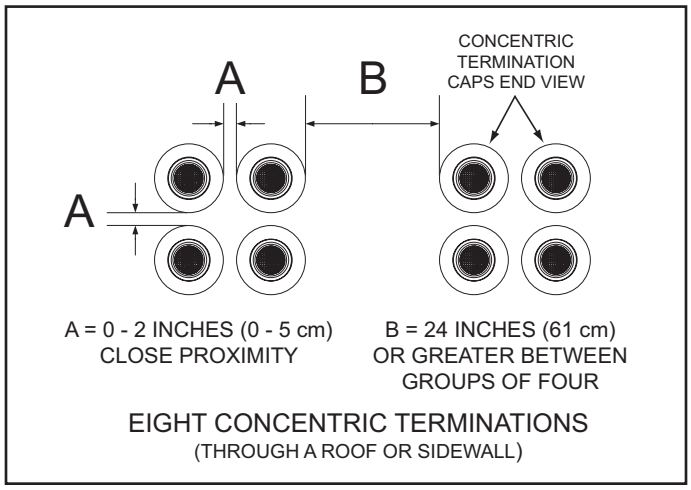

Figure 35

MULTIPLE CONCENTRIC TERMINATION ARRANGEMENTS

The illustrations on this page show some of the installation arrangements for multiple concentric terminations that are allowed.

See Multiple Concentric Termination Clearances on page 32 for detailed information on clearances and additional arrangement options.

NOTE: When multiple concentric terminations are installed through a roof in the same location all termination caps must be at the same height measured from the ground.

Two Concentric Terminations

Two concentric terminations may be installed in close proximity as shown in Figure 36 or with standard clearances when this arrangement is not possible. See Figure 31 on page 32 for detailed information on clearances. See Figure 32 on page 32 when installing three concentric terminations.

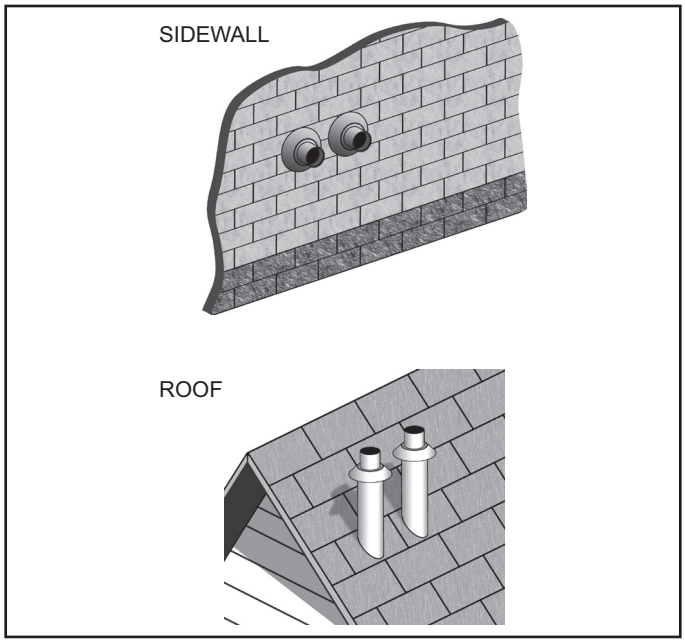

Figure 36

Four Concentric Terminations

Four concentric terminations may be installed in close proximity as shown in Figure 37. See Figure 33 and Figure 34 on page 32 for detailed information on clearances and additional arrangement options.

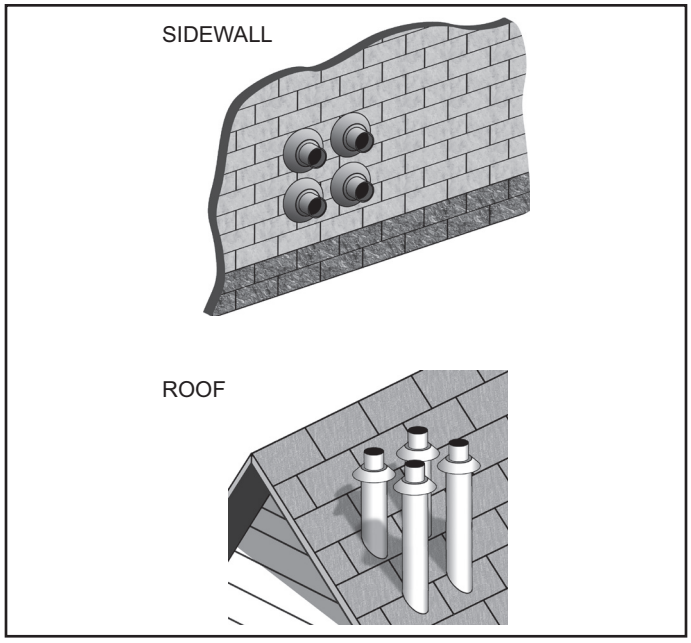

Figure 37

Eight Concentric Terminations

Eight concentric terminations may be installed in two stacked groups of four, in close proximity, as shown in Figure 38. See Figure 35 on page 32 for detailed information on clearances.

Lateral groups of four as shown in Figure 34 on page 32 may be a more convenient installation arrangement for multiple groups depending on available space.

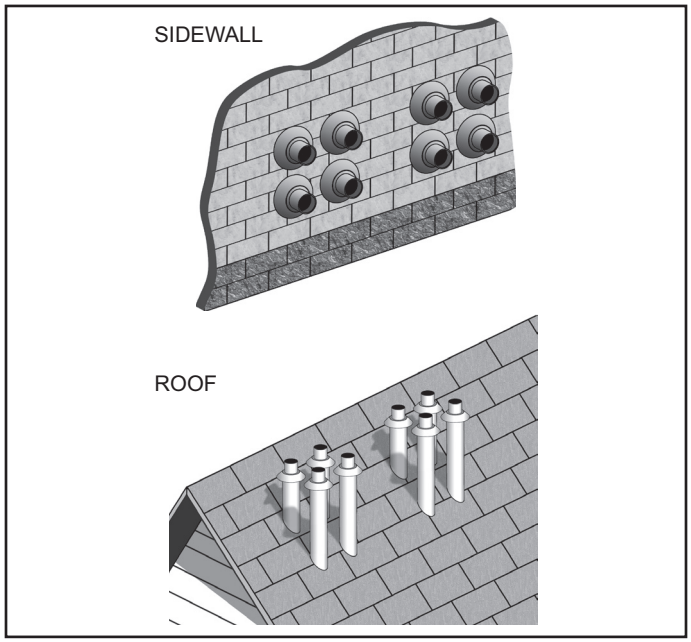

Figure 38

LOW PROFILE VENT INSTALLATION

This water heater is certified for sidewall direct venting with IPEX System 636 Low Profile Vent Kit. Follow instructions below for proper installations.

All termination kits must be located and installed in accordance with locl building code and CSA B149.1 Natural Gas and Propane Installation Code.

1. Once the proper location has been determined, cut 2 holes in the wall large enough to accomodate the pipe. See the Chart at bottom of this page for pipe diameters and distance between hole centers.
2. Slide both the intake and exhaust pipes through the holes. Solvent cement both pipes to the base of the vent termination kit, follow the solvent cementing procedures outlined in the IPEX System 636 Installation Guide, which is available on the web www.ipexinc.com.
3. To fasten the Base to the wall, use the supplied screws and anchors. A 3/16" (5mm) hole, 1-3/16" (30mm) deep, will need to be drilled for the anchors. Locate the anchor hole using the base as a template.
4. Screw the Cap to the Base using the supplied screws.
5. Once the vent termination and pipes are secured, the wall penetrations will need to be sealed from the interior using a PVC-compatible sealant material.
6. All vent pipes and air inlets must terminate at the same height to avoid possibility of severe personal injury, death, or substantial property damage.
7. Operate heater through 1 heat cycle to ensure combustion-air and vent pipes are properly connected to concentric vent termination.

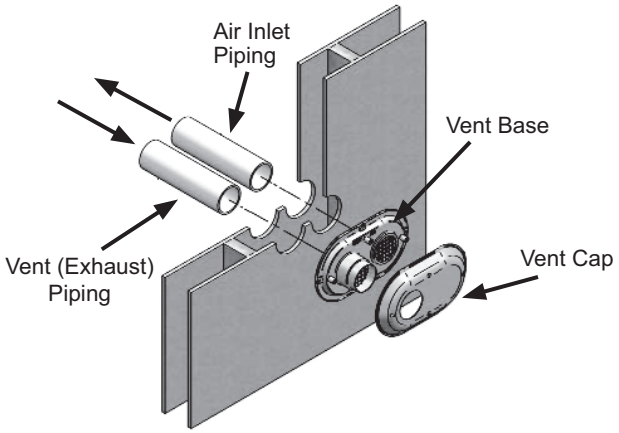

Figure 39

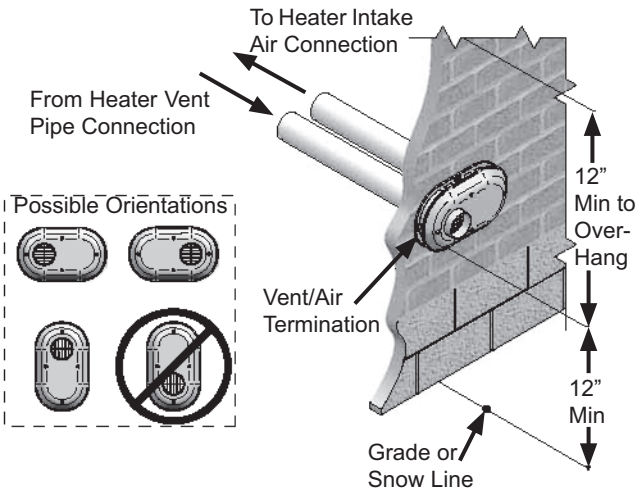

Figure 40

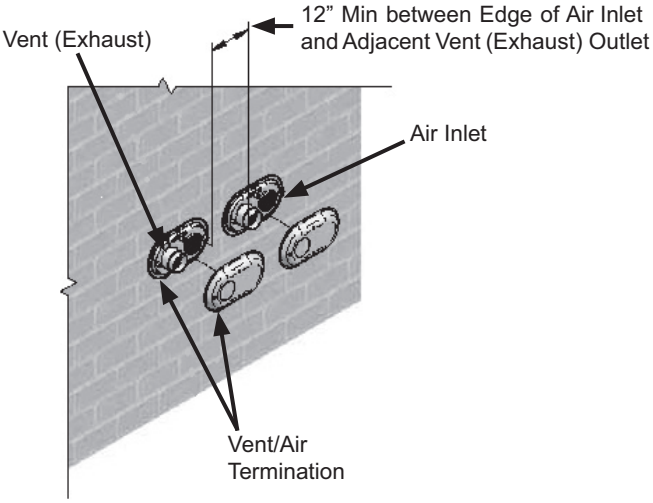

Figure 41

Low Profile Termination Kits - Dimensions and Contents Chart

Low Profile Termination Kits - Dimensions				
Kit Number	**IPEX Part Number**	**Description**	**Pipe Outside Diameter**	**Hole Spacing (ctr to ctr)**
9008933005	196985	3″ Flush Mount Vent Kit	3.5″	5.63″
9008934005	196986	4″ Flush Mount Vent Kit	4.5″	5.63″

Each Kit Contains	
Qty	**Item Description**
1	Base (two holes)
1	Cap (one hole)
8	Stainless Steel Screws
4	Plastic Anchors

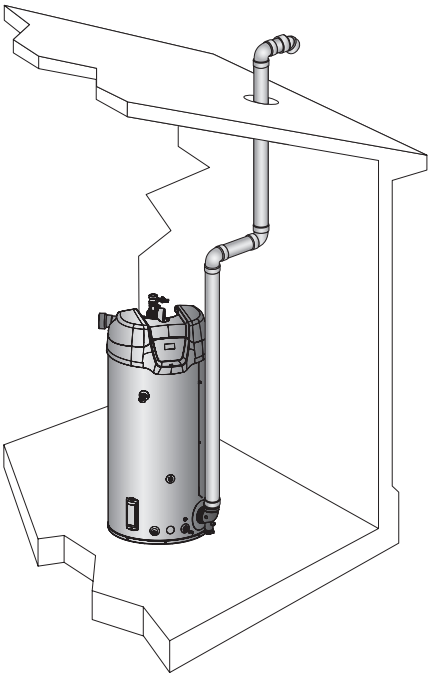

Power Vent Vertical
Figure 42

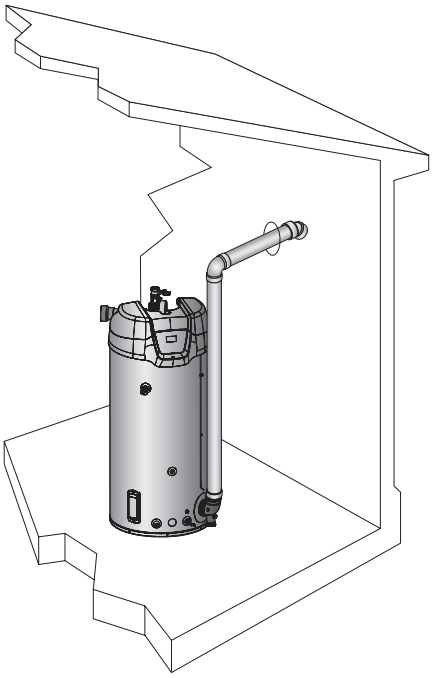

Power Vent Horizontal
Figure 43

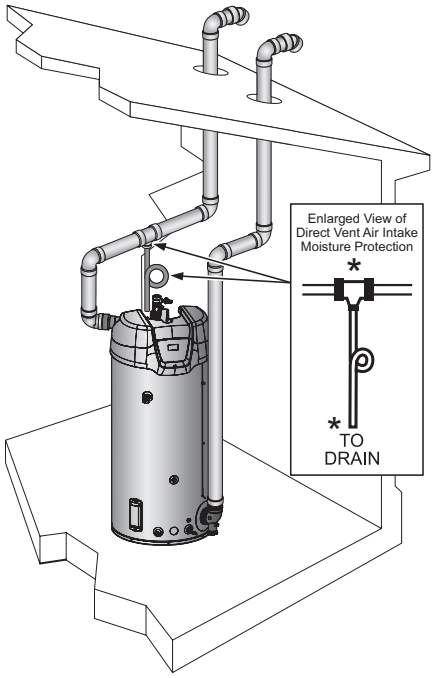

Direct Vent Vertical
Figure 44

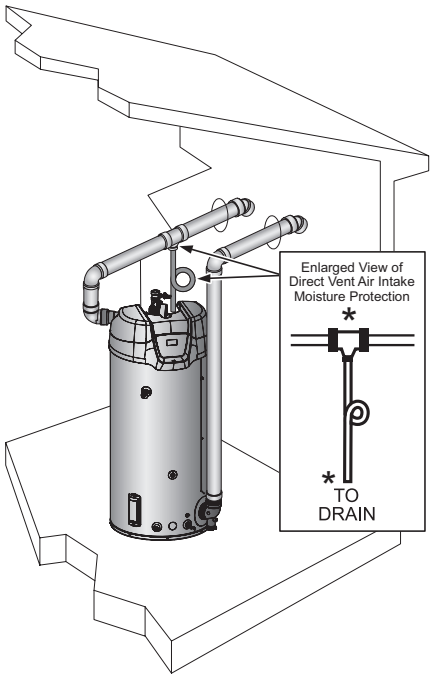

Direct Vent Horizontal
Figure 45

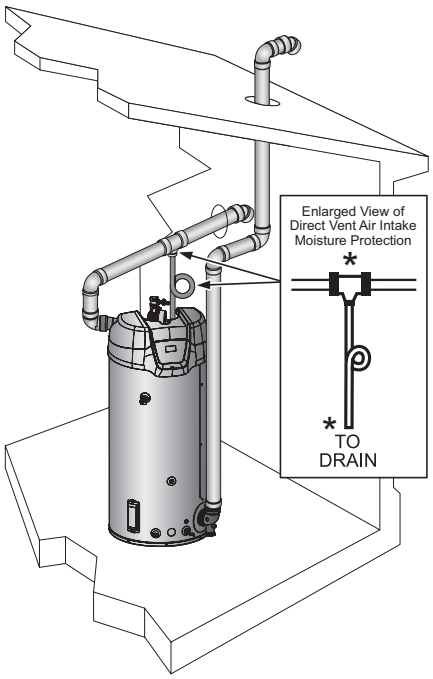

Direct Vent Vertical Vent
Horizontal Intake
Figure 46

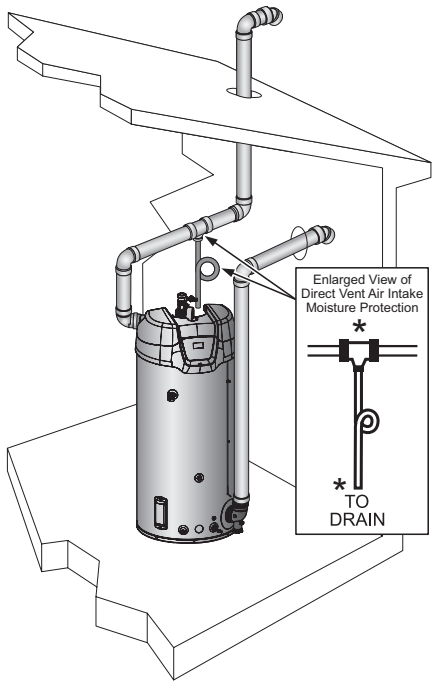

Direct Vent Horizontal Vent
Vertical Intake
Figure 47

*Direct Vent combustion air intake drains are required in certain situations. See the section on Direct Vent Air Intake Moisture Protection on page 25.

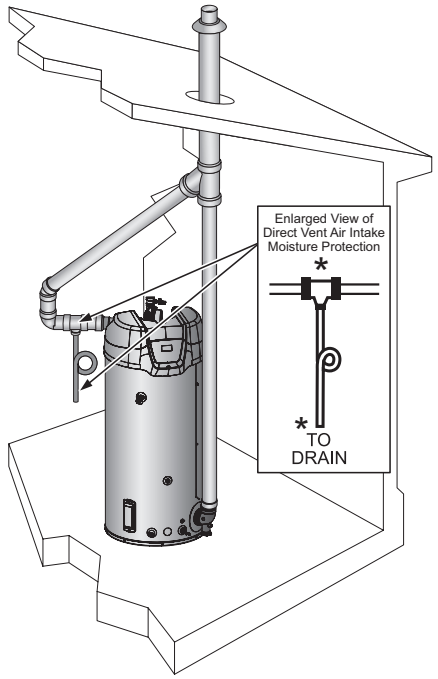

Direct Vent Vertical Concentric
Figure 48

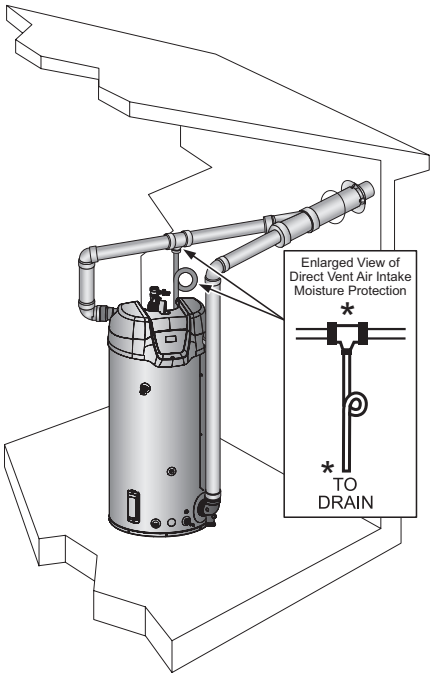

Direct Vent Horizontal Concentric
Figure 49

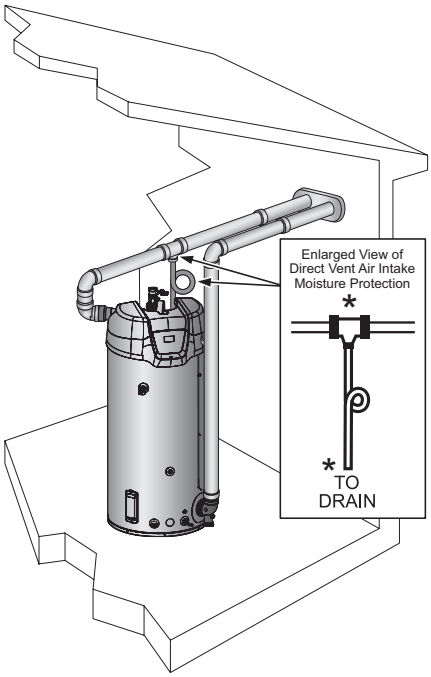

Direct Vent Horizontal Low Profile
Figure 50

*Direct Vent combustion air intake drains are required in certain situations. See the section on Direct Vent Air Intake Moisture Protection on page 25.

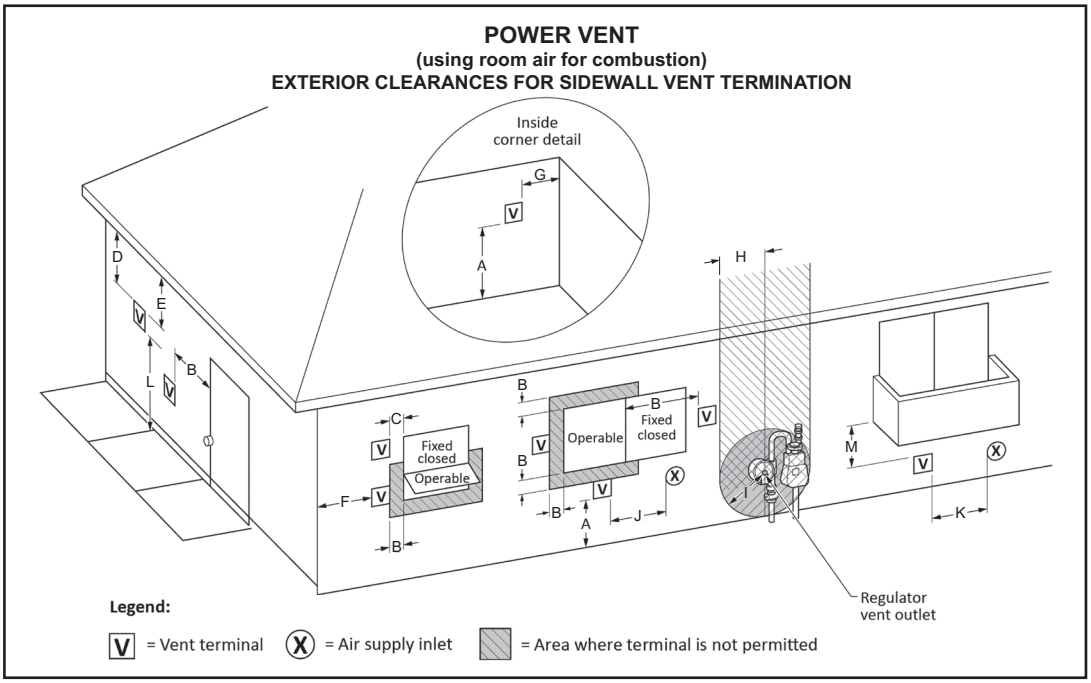

Figure 51

Vent terminal clearances for "Power Vent" installations. Power Vent configurations use room air for combustion.

		CANADIAN INSTALLATIONS [1]	US INSTALLATIONS [2]			CANADIAN INSTALLATIONS [1]	US INSTALLATIONS [2]
A	Clearance above grade, veranda, porch, deck or balcony	12 inches (30 cm)	12 inches (30 cm)	**H**	Clearance to each side of center line extended above meter/regulator assembly	Clearance in accordance with local installation codes and the requirements of the gas supplier	Clearance in accordance with local installation codes and the requirements of the gas supplier
B	Clearance to window or door that may be opened	6 in (15 cm) for appliances ≤ 10,000 Btuh (3 kW), 12 in (30 cm) for appliances > 10,000 Btuh (3 kW) and ≤ 100,000 Btuh (30 kW), 36 in (91 cm) for appliances >100,000 Btuh (30 kW)	4 feet (1.2 m) below or to side of opening; 1 foot (30 cm) above opening	**I**	Clearance to service regulator vent outlet	Above a regulator within 3 ft (91 cm) horizontally of the vertical center line of the regulator vent outlet to a maximum vertical distance of 15 ft (4.5 m)	Clearance in accordance with local installation codes and the requirements of the gas supplier
C	Clearance to permanently closed window	12 inches (30 cm)*	12 inches (30 cm)*	**J**	Clearance to a non mechanical air supply inlet into building or combustion air inlet to any other appliance	6 in (15 cm) for appliances ≤ 10,000 Btuh (3 kW), 12 in (30 cm) for appliances > 10,000 Btuh (3 kW) and ≤ 100,000 Btuh (30 kW), 36 in (91 cm) for appliances >100,000 Btuh (30 kW)	4 feet (1.2 m) below or to side of opening; 1 foot (30 cm) above opening.
D	Vertical clearance to ventilated soffit located above the terminal within a horizontal distance of 2 feet (61 cm) from the center line of the terminal	12 inches (30 cm)*	12 inches (30 cm)*	**K**	Clearance to a mechanical air supply inlet	6 feet (1.83 m)	3 feet (91 cm) above if within 10 feet (3 m) horizontally
E	Clearance to unventilated soffit	12 inches (30 cm)*	12 inches (30 cm)*	**L**	Clearance above paved sidewalk or paved driveway located on public property	7 feet (2.13 m)†	7 feet (2.13 m)
F	Clearance to outside corner	2 feet (60 cm)*	2 feet (60 cm)*	**M**	Clearance under veranda, porch, deck, or balcony	12 inches (30 cm) ‡	12 inches (30 cm) ‡
G	Clearance to inside corner	18 inches (45 cm)*	18 inches (45 cm)*				

1 In accordance with the current CSA B149.1, Natural Gas and Propane Installation Code.

2 In accordance with the current ANSI Z223.1/NFPA 54, National Fuel Gas Code.

† A vent shall not terminate directly above a sidewalk or paved driveway that is located between two single family dwellings and serves both dwellings. Where it may cause hazardous frost or ice accumulations on adjacent property surfaces.

‡ Permitted only if veranda, porch, deck, or balcony is fully open on a minimum of two sides beneath the floor.

* Clearance in accordance with local installation codes and the requirements of the gas supplier and the manufacturer's installation instructions.

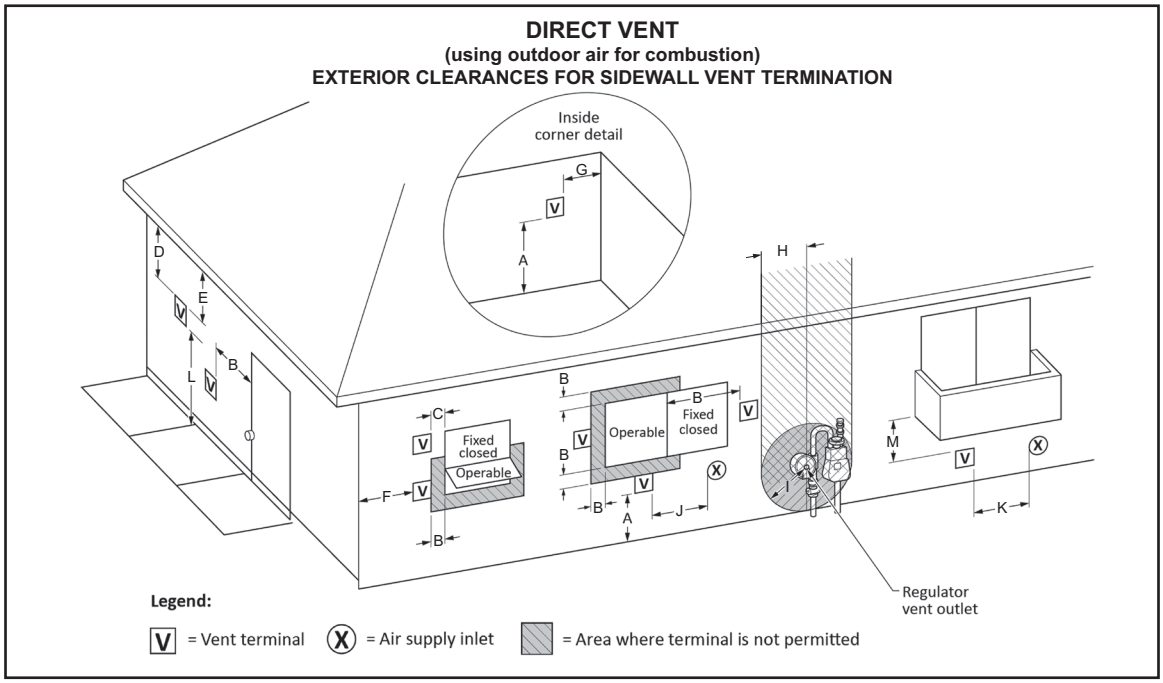

Figure 52

Vent terminal clearances for "Direct Vent" installations. Direct Vent configurations use outdoor air for combustion.

		CANADIAN INSTALLATIONS [1]	US INSTALLATIONS [2]			CANADIAN INSTALLATIONS [1]	US INSTALLATIONS [2]
A	Clearance above grade, veranda, porch, deck or balcony	12 inches (30 cm)	12 inches (30 cm)	**H**	Clearance to each side of center line extended above meter/regulator assembly	Clearance in accordance with local installation codes and the requirements of the gas supplier.	Clearance in accordance with local installation codes and the requirements of the gas supplier.
B	Clearance to window or door that may be opened	6 in (15 cm) for appliances ≤ 10,000 Btuh (3 kW), 12 in (30 cm) for appliances > 10,000 Btuh (3 kW) and ≤ 100,000 Btuh (30 kW), 36 in (91 cm) for appliances >100,000 Btuh (30 kW)	6 in (15 cm) for appliances ≤ 10,000 Btuh (3 kW), 9 in (23 cm) for appliances > 10,000 Btuh (3 kW) and ≤ 50,000 Btuh (15 kW), 12 in (30 cm) for appliances > 50,000 Btuh (15 kW)	**I**	Clearance to service regulator vent outlet	Above a regulator within 3 ft (91 cm) horizontally of the vertical center line of the regulator vent outlet to a maximum vertical distance of 15 ft (4.5 m)	Clearance in accordance with local installation codes and the requirements of the gas supplier
C	Clearance to permanently closed window	6 inches (15 cm)*	6 inches (15 cm)*	**J**	Clearance to a non mechanical air supply inlet into building or combustion air inlet to any other appliance	6 in (15 cm) for appliances ≤ 10,000 Btuh (3 kW), 12 in (30 cm) for appliances > 10,000 Btuh (3 kW) and ≤ 100,000 Btuh (30 kW), 36 in (91 cm) for appliances >100,000 Btuh (30 kW)	6 in (15 cm) for appliances ≤ 10,000 Btuh (3 kW), 9 in (23 cm) for appliances > 10,000 Btuh (3 kW) and ≤ 50,000 Btuh (15 kW), 12 in (30 cm) for appliances > 50,000 Btuh (15 kW)
D	Vertical clearance to ventilated soffit located above the terminal within a horizontal distance of 2 feet (61 cm) from the center line of the terminal	12 inches (30 cm)*	12 inches (30 cm)*	**K**	Clearance to a mechanical air supply inlet	6 feet (1.83 m)	3 feet (91 cm) above if within 10 feet (3 m) horizontally
E	Clearance to unventilated soffit	12 inches (30 cm)*	12 inches (30 cm)*	**L**	Clearance above paved sidewalk or paved driveway located on public property	7 feet (2.13 m)†	7 feet (2.13 m)†*
F	Clearance to outside corner	2 feet (60 cm)*	2 feet (60 cm)*	**M**	Clearance under veranda, porch, deck, or balcony	12 inches (30 cm) ‡	12 inches (30 cm) ‡*
G	Clearance to inside corner	18 inches (45 cm)*	18 inches (45 cm)*				

1 In accordance with the current CSA B149.1, Natural Gas and Propane Installation Code.

2 In accordance with the current ANSI Z223.1/NFPA 54, National Fuel Gas Code.

† A vent shall not terminate directly above a sidewalk or paved driveway that is located between two single family dwellings and serves both dwellings. Where it may cause hazardous frost or ice accumulations on adjacent property surfaces.

‡ Permitted only if veranda, porch, deck, or balcony is fully open on a minimum of two sides beneath the floor.

* Clearance in accordance with local installation codes and the requirements of the gas supplier and the manufacturer's installation instructions.

CONDENSATE DRAIN INSTALLATION

Installation must conform with these instructions and local building codes.

Field supplied materials required for installation include:

- Approved PVC cement and PVC primer.
- 1/2 inch PVC pipe - minimum length to equal the distance between the water heater and a suitable building drain.
- 1/2 inch PVC fittings (elbows, couplings, and adapters) necessary to install a condensate drain line between the Exhaust/Condensate Elbow Assembly and a suitable building drain.
- Floor mounted standoffs to brace the drain line.

INSTALLATION NOTES

1. The condensate drains from the water heater's covered by this instruction have PH levels between 4.3 and 5.0. Install a commercially available neutralizing kit if required by local codes. Lower PH levels are acidic. Do not connect a metal condensate drain line, such as copper pipe, to the water heater for this reason.
2. The field installed condensate drain line must not be less than 1/2 inch PVC in size.
3. The exhaust elbow has a built in condensate trap. Do not install an additional trap in the condensate drain piping. **DO NOT** remove, modify or alter the factory condensate trap.

INSTALLATION INSTRUCTIONS

1. Ensure the water heater's Enable/Disable switch is in the "Disable" position.
2. Install a 1/2 inch PVC condensate drain line between condensate drain connection on the Exhaust/Condensate Elbow and a suitable building drain. The condensate line must slope to an open drain, see Figure 53.
3. Terminate the condensate drain piping with an elbow above the drain. Ensure that any discharge will exit the condensate drain line no more than 6 inches (15.2 cm) above a suitable building drain, or external to the building, see Figure 53.

   NOTE: In cold climates it is recommended the condensate drain be terminated at a suitable drain inside the building.
4. Ensure the condensate drain line is not elevated above the condensate drain connection on the Exhaust/Condensate Elbow, see Figure 53.
5. Brace the condensate drain line with floor mounted standoffs every three feet.
6. Ensure the condensate drains freely during start up, see Start Up on page 53.
7. Condensate clean out cap must be on and tight when unit is in operation.

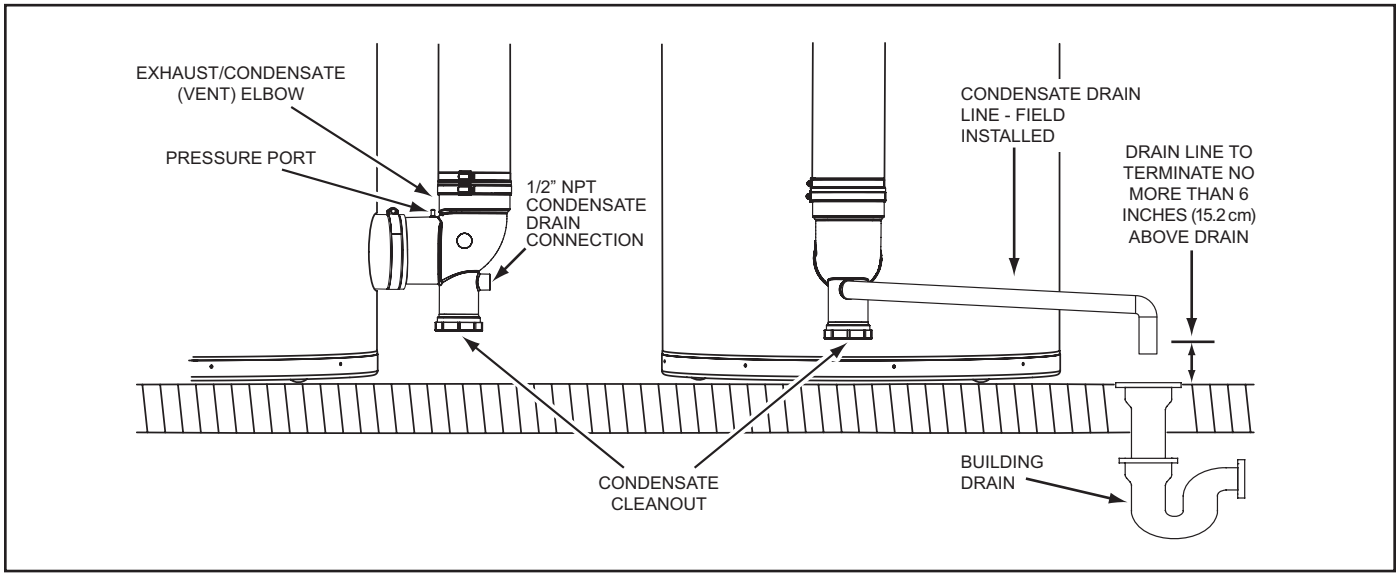

Figure 53

SUPPLY GAS LINE INSTALLATION

Contact your local gas utility company to ensure that adequate gas service is available and to review applicable installation codes for your area.

Be sure that the gas meter has sufficient capacity to supply the rated gas input of the water heater as well as the requirements of all other gas fired equipment supplied by the meter. If the gas meter is undersized, the gas company will have to install a properly sized gas meter.

⚠ WARNING

Fire and Explosion Hazard

- Do not use water heater with any gas other than the gas shown on the rating label.
- Excessive gas pressure to gas valve can cause serious injury or death.
- Turn off gas lines during installation.
- Contact a qualified installer or service agency for installation and service.

Make sure gas supplied is same type listed on the water heater's rating label.

The water heaters covered in this manual are not intended for operation at higher than 14.0" W. C. (2.62 kPa) for natural gas and 14.0" W. C. (3.49 kPa) for propane gas supply pressure, see Table 3 on page 11. The water heaters covered in this manual require supply gas regulators to maintain required supply gas pressure. Exposure to higher gas supply pressure may cause damage to the gas controls which could result in fire or explosion. If overpressure has occurred such as through improper testing of gas lines or malfunction of the supply system the water heater's gas valve must be checked for safe operation by a Qualified Service Agency.

Ensure supply regulator vent lines and the safety vent valves are protected against blockage. These are components of the gas supply system, not the water heater. Vent blockage may occur during ice storms.

It is important to guard against gas valve fouling from contaminants in the gas ways. Such fouling may cause improper operation, fire or explosion. If copper supply lines are used they must be internally tinned and certified for gas service.

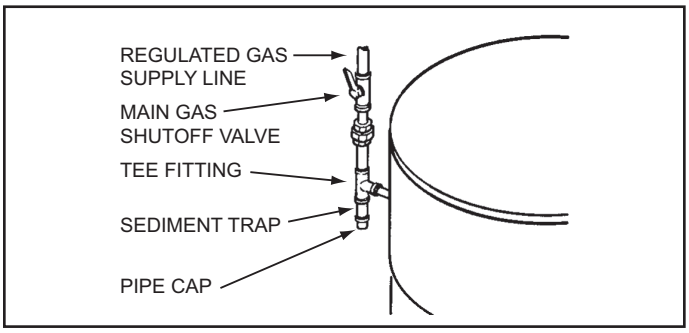

Figure 54

Ensure all gas pipe is clean on the inside before installation. To trap any dirt or foreign material in the gas supply line a sediment trap must be installed as shown in Figure 54. The sediment trap must be readily accessible and not subject to freezing conditions. Install in accordance with the recommendations of the local gas utility company.

GAS LINE SIZING

Depending on the developed equivalent length and/or the number of appliances connected to a common main, the size of supply gas lines may have to be increased.

Size the supply/main gas line(s) in accordance with Table 11 or Table 12. The values given in Table 11 and Table 12 are for straight lengths of iron pipe at 0.5" W. C. (125 Pa) pressure drop, which is considered normal for low pressure systems. Note that fittings such as elbows and tees will add to the pipe pressure drop.

Schedule 40 Steel or Wrought Iron Pipe is the preferred material for the gas line of this water heater. It is imperative to follow the sizing recommendations in the latest version of the National Fuel Gas Code if Corrugated Stainless Steel Tubing (CSST) is used as the gas line for this water heater.

SUPPLY GAS LINE SIZING U. S. UNITS
TABLE 11

LENGTH IN FEET	NORMAL IRON PIPE SIZES (INCHES) INPUT IN THOUSANDS BTU/HR					
	1/2"	3/4"	1"	1 1/4"	1 1/2"	2"
10	175	360	680	1400	2100	3960
20	120	250	485	950	1460	2750
30	97	200	375	770	1180	2200
40	82	170	320	660	990	1900
50	73	151	285	580	900	1680
60	66	138	260	530	810	1520
70	61	125	240	490	750	1400
80	57	118	220	460	690	1300
90	53	110	205	430	650	1220
100	50	103	195	400	620	1150
125	44	93	175	360	550	1020
150	40	84	160	325	500	950
175	37	77	145	300	460	850
200	35	72	135	280	430	800

SUPPLY GAS LINE SIZING METRIC UNITS
TABLE 12

LENGTH IN METERS	NORMAL IRON PIPE SIZES (INCHES) INPUT IN kW					
	1/2"	3/4"	1"	1 1/4"	1 1/2"	2"
3.0	51	105	199	410	615	1160
6.1	35	73	142	278	428	805
9.1	28	59	110	225	346	644
12.2	24	50	94	193	290	556
15.2	21	44	83	170	264	492
18.3	19	40	76	155	237	445
21.3	18	37	70	143	220	410
24.4	17	35	64	135	202	381
27.4	16	32	60	126	190	357
30.5	15	30	57	117	182	337
38.1	13	27	51	105	161	299
45.7	12	25	47	95	146	278
53.3	11	23	42	88	135	249
61.0	10	21	40	82	126	234

GAS LINE CONNECTION

1. The water heaters covered by this manual are shipped from the factory with 3/4 inch supply gas connections. The supply gas line must not be smaller than 3/4 inch. Connect the supply gas line to the water heater's 24 Volt Gas Valve in accordance with all applicable local and national code requirements.
2. Depending on the developed equivalent length and/or the number of appliances connected to a common main, the size of the supply gas line may have to be increased, see Gas Line Sizing on page 40. If the supply gas line must be re-sized larger to accommodate increased supply gas line lengths or multiple appliances use reducer couplings and short pipe nipples to increase the supply gas line.

   NOTE: Make the transition to the larger supply gas line as close to the supply gas connection as possible.
3. Apply thread sealing compounds (pipe dope/Teflon tape) sparingly and only to the male threads of the pipe joints. Do not apply sealing compound to the first two threads. Use pipe dope or Teflon tape marked as being resistant to the action of liquid petroleum (LP/propane) gases.

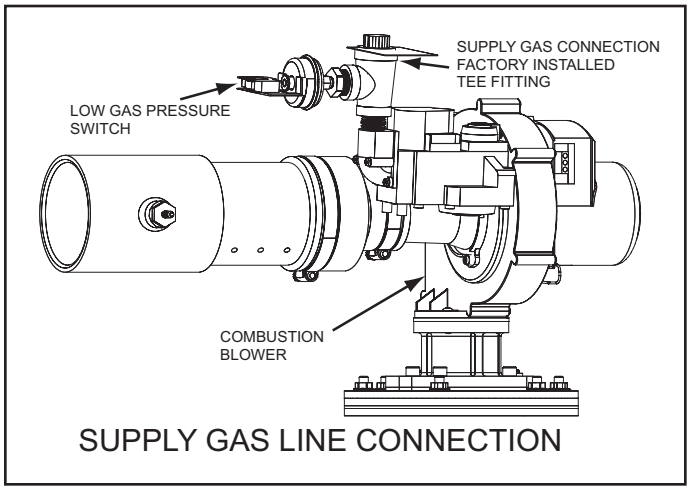

Figure 55

4. Use only a smooth jaw adjustable wrench as a back up on the body of the 24 Volt Gas Valve when tightening the first pipe nipple into the body of the valve. **DO NOT** use a standard pipe wrench (Stillson wrench) with metal tooth jaws as this may permanently damage the valve.
5. Use a standard pipe wrench (Stillson wrench) as a back up on the first pipe nipple installed above when connecting other fittings and pipe in the supply gas line to prevent the 24 Volt Gas Valve on the water heater from twisting during installation.
6. To prevent damage, care must be taken not to apply too much torque when connecting the supply gas line to the water heater.
7. Install a sediment trap as shown in Figure 54 on page 40.
8. Install a Main Gas Shutoff valve in the supply gas line as shown in Figure 54 on page 40.

NOTE: Should overheating occur or the gas supply fail to shut off, turn off the Main Gas Shutoff valve to the water heater.

GAS LINE LEAK TESTING

⚠ WARNING

Fire and Explosion Hazard

- Use joint compound or Teflon tape compatible with propane gas.
- Leak test gas connections before placing water heater in operation.
- Disconnect gas piping at main gas shutoff valve before leak testing heater.
- Install sediment trap in accordance with NFPA 54 or CAN/CSA B149.1.

Any time work is done on the gas supply system perform a leak test to avoid the possibility of fire or explosion.

1. For test pressures exceeding 1/2 psi (3.45 kPa) disconnect the water heater and its Main Gas Shutoff Valve from the gas supply piping system during testing, see Figure 54 on page 40. The gas supply line must be capped when disconnected from the water heater.
2. For test pressures of 1/2 psi (3.45 kpa) or less, the water heater need not be disconnected, but must be isolated from the supply gas line by closing the Main Gas Shutoff Valve during testing.
3. Paint all supply gas line joints and connections upstream of the water heater with a rich soap and water solution to test for leaks. Bubbles indicate a gas leak. Do not use matches, candles, flame or other sources of ignition for this purpose.
4. Repair any leaks before placing the water heater in operation.

PURGING

Gas line purging is required with new piping or systems.

Purging should be performed per the current edition of NFPA 54 the National Fuel Gas Code or CAN/CSA B149.1 Natural Gas and Propane Installation Code.

ELECTRICAL WIRING

All electrical work must be installed in accordance with the National Electrical Code, ANSI/NFPA 70 or the Canadian Electrical Code, CSA C22.1 and local requirements.

When installed, the water heater must be electrically grounded in accordance with local codes or, in the absence of local codes, with the National Electrical Code, ANSI/NFPA 70 or the Canadian Electrical Code, CSA C22.1.

If any of the original wire as supplied with the water heater must be replaced, it must be replaced with 105°C rated wiring or its equivalent, except in the burner housing. In this case 200°C rated wire must be used.

DEDICATED POWER WIRING AND BREAKERS

Dedicated power supply wires, ground wiring and dedicated circuit breakers often prevent electrical line noise and are required when installing the water heater.

NOTE: This water heater should not be connected to an electrical supply with a Ground Fault Circuit Interrupter (GFCI) or Arc Fault Circuit Interrupter (AFCI) with Integral GFCI protection as defined in NFPA 70, CSA C22.1 and UL 943.

POWER SUPPLY CONNECTIONS

Read the requirements for the Power Supply on page 13 before connecting power.

The 120 VAC hot wire from the power supply must connect to the black jumper wire or the "L1" terminal block location in the junction box and the 120 VAC neutral wire must connect to the white jumper wire or the "Neutral" terminal block location in the junction box for correct polarity. See Figure 56.

Power supply connections must be made as follows:

1. Turn off power at the water heater's enable/disable switch and the breaker that supplies power to the water heater.
2. Remove the junction box cover. See Figure 3 on page 8 for junction box location.
3. Connect the 120VAC hot wire from the power supply to the black jumper wire or the terminal block location marked "L1" inside of the junction box located on top of the water heater. If the black jumper wire is used make the connection inside of the junction box with a properly sized wire nut and wrap electrical tape around the wire nut and wire end. See junction box Figure 56 and wiring diagram Figure 67 on page 67.

   NOTE: If electrical connection is made directly to terminal block remove black jumper wire before making connection.
4. Connect the 120VAC neutral wire from the power supply to the white jumper wire or the terminal block location marked "Neutral" inside of the junction box located on top of the water heater. If the white jumper wire is used, make the connection inside of the junction box with a properly sized wire nut and wrap electrical tape around the wire nut and wire end. See junction box Figure 56 and wiring diagram Figure 67 on page 67.

   NOTE: If electrical connection is made directly to terminal block remove white jumper wire before making connection.
5. Connect the ground wire from the power supply to the grounding lug inside the junction box. See junction box Figure 56 and Wiring Diagram Figure 67 on page 67.
6. Replace junction box cover when connections are complete.

NOTE: Do not apply power to the water heater before installation is complete and the water heater is filled with water.

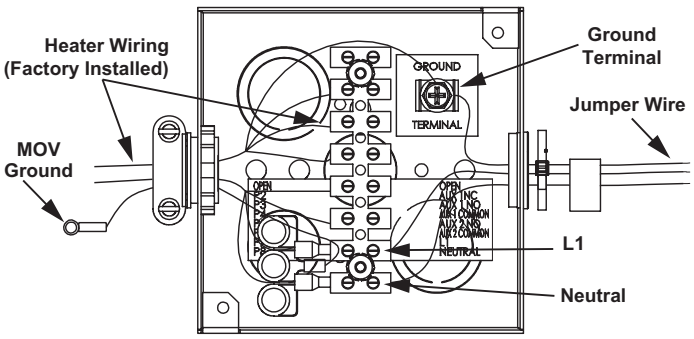

Figure 56

ENABLE / DISABLE CIRCUIT (For Building Management Systems)

The water heaters covered in this manual are equipped with an enable/disable circuit for use with field supplied external supervisory controls such as time clocks or Building Management Systems. The enable/disable circuit may be used to disable heating operation during periods when the building is unoccupied or there is no demand for hot water.

To use the enable/disable circuit it must first be activated by selecting the “Use External Enable” from the UIM. Field supplied wiring is then installed between the water heater’s CCB and a set of “dry contacts” (no voltage or load) on the field supplied external control.

NOTE: The water heater’s enable/disable circuit is a switching circuit only: Do not apply external voltage or connect any load (IE: relay coil) to this circuit. This will damage the CCB circuit board and is not covered under the limited warranty.

CONNECTING AN EXTERNAL SUPERVISORY CONTROL

The enable/disable circuit is accessed from the CCB’s J17 plug inside the CCB enclosure; see Figure 3 on page 8 to locate the CCB enclosure. Install field wiring to the enable/disable circuit:

1. Turn off power at the water heater’s enable/disable switch and the breaker that supplies power to the water heater.
2. Locate the CCB enclosure.
3. Carefully remove the Temperature Probe connectors and CCB enclosure cover.
4. Locate pins 1 and 2 on the CCB J17 plug. See Figure 66 on page 66.
5. Connect the two field supplied control wires to pins 1 and 2 on the CCB J17 plug.
6. Thread the control wires out of the CCB enclosure with the other wiring and carefully replace the CCB enclosure cover. Ensure all wiring is routed through the intended area provided for strain relief. Ensure no wiring is being pinched.
7. Reinstall the CCB enclosure cover and Temperature Probe connectors.
8. Route the control wires inside the junction box on the top of the water heater; see Figure 3 on page 8 to locate the junction box. Use an available knock-out to route the wires inside the junction box.
9. Install field supplied control wiring and conduit as required by national and local codes between the water heater’s junction box and the external supervisory control. Connect the wiring from the external control to the control wires inside the junction box using wire nuts and electrical tape.
10. Connect the control wiring to a set of dry contacts on the external control. Follow the control manufacturer’s instructions for making connections.
11. Restore power to the water heater.
12. From the water heaters UIM “Heater Information Screen” select “Use External Enable” and change to “Yes”. See Figure 3 on page 8 to locate the UIM.

NOTE: Whenever the external control opens the set of dry contacts used, water heating operation will be disabled. Whenever the external control closes the set of dry contacts used, water heating operation will be enabled. A diagonal line and circle appears over the thermometer icon on the UIM when water heating operation is disabled. See the Status Icons descriptions in Table 14 on page 46.

NOTE: Ensure the water heater is protected from freezing temperatures when water heating operation is disabled. Damage to the water heater caused by freezing temperatures is not covered under the limited warranty.

WATER LINE CONNECTIONS

The water piping installation must conform to these instructions and to all local and national code authority having jurisdiction. Good practice requires that all heavy piping be supported.

Read and observe all requirements in the following sections before installation of the water piping begins:

1. Mixing Valves on page 14.
2. Dishwashing Machines on page 14.
3. Temperature-Pressure Relief Valve on page 15.
4. Closed Systems and Thermal Expansion on page 14.
5. For multiple water heater installations see Water Piping Diagrams beginning on page 69.

WATER PIPING DIAGRAMS

This manual provides detailed water piping diagrams for typical methods of application for the water heaters, see Water Piping Diagrams beginning 69.

The water heater may be installed by itself, or with a separate storage tank. When used with a separate storage tank, the circulation may be either by gravity or by means of a circulating pump. When a circulating pump is used, it is important to note that the flow rate should be slow so that there will be a minimum of turbulence inside the water heater storage tank.

Adjust flow by throttling a full port ball valve installed in the circulating line on the outlet side of the pump. Never throttle flow on the suction side of a pump. See the Water Piping Diagrams beginning on page 69.

NOTE: In addition to the factory installed Temperature-Pressure Relief Valve (T&P valve) on the water heater, each remote storage tank that may be installed and piped to a water heating appliance must also have its own properly sized, rated and approved Temperature-Pressure Relief Valve installed.

Call the toll free technical support phone number listed on the back cover of this manual for further assistance in sizing a T&P valve for remote storage tanks.

THERMOMETERS (NOT SUPPLIED)

Thermometers are installed in the water piping system as a means of detecting the temperature of the hot water supply at critical points in the system. Field supplied thermometers should be obtained and installed. See Water Piping Diagrams on page 69.

WATER (POTABLE) HEATING AND SPACE HEATING

1. All water piping components connected to the water heater that are for space heating applications shall be suitable for use with potable water.
2. Toxic chemicals, such as those used for boiler treatment, must NEVER be introduced into this system.
3. The water heaters covered in this manual may never be connected to any existing heating system or component(s) previously used with non-potable water heating appliance.
4. When the system requires water for space heating that exceed safe temperatures at domestic water fixtures a mixing valve must be installed, see Mixing Valves on page 14.
5. These water heaters cannot be used in space heating applications only.

T&P VALVE DISCHARGE PIPE

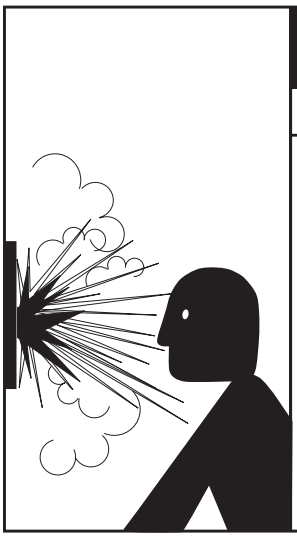

⚠ WARNING

Explosion Hazard

- Temperature-Pressure Relief Valve must comply with ANSI Z21.22-CSA 4.4 and ASME code.
- Properly sized temperature-pressure relief valve must be installed in opening provided.
- Can result in overheating and excessive tank pressure.
- Can cause serious injury or death.

This water heater is provided with a properly rated/sized and certified combination temperature - pressure (T&P) relief valve by the manufacturer. See Temperature-Pressure Relief Valve on page 15 for information on replacement and other requirements.

CAUTION

Water Damage Hazard

- Temperature-Pressure Relief Valve discharge pipe must terminate at adequate drain.

Install a discharge pipe between the T&P valve discharge opening and a suitable floor drain. Do not connect discharge piping directly to the drain unless a 6” (15.2 cm) air gap is provided. To prevent bodily injury, hazard to life, or property damage, the relief valve must be allowed to discharge water in adequate quantities should circumstances demand. If the discharge pipe is not connected to a drain or other suitable means, the water flow may cause property damage.

T&P Valve Discharge Pipe Requirements:

- Shall not be smaller in size than the outlet pipe size of the valve, or have any reducing couplings or other restrictions.
- Shall not be plugged or blocked.
- Shall not be exposed to freezing temperatures.
- Shall be of material listed for hot water distribution.
- Shall be installed so as to allow complete drainage of both the Temperature-Pressure Relief Valve and the discharge pipe.
- Must terminate a maximum of six inches above a floor drain or external to the building. In cold climates, it is recommended that the discharge pipe be terminated at an adequate drain inside the building.
- Shall not have any valve or other obstruction between the relief valve and the drain.

TEMPERATURE REGULATION

HIGH TEMPERATURE LIMIT CONTROL (ECO)

This water heater is equipped with an ECO (energy cut out) non adjustable high temperature limit switch. The ECO is a normally closed switch that opens (activates) on a rise in temperature.

The ECO is located inside the Upper Temperature Probe (two red wires), see pages 8 and 9 for location. The ECO switch contacts will open when the water temperature reaches approximately 202°F (94°C) and close at approximately 140°F (60°C).

If the ECO activates (contacts open) due to abnormally high water temperatures in the storage tank the control system will immediately de-energize the 24 Volt Gas Valve and end the current heating cycle. The control system will "lock out" disabling further heating operation. The control system will display the "Energy Cut Out (ECO)" Fault message on the LCD screen. It is important that a Qualified Service Agent be contacted to determine the reason for the ECO activation before resetting the ECO. Once the reason has been determined and corrected the ECO can be reset as follows:

Should the ECO activate, the water temperature must drop below 140°F (60°C) before the control system can be reset. Once the water temperature has cooled below this point the power supply to the water heater must be turned off and on again to reset the control system.

THERMOSTAT CONTROL

⚠ DANGER

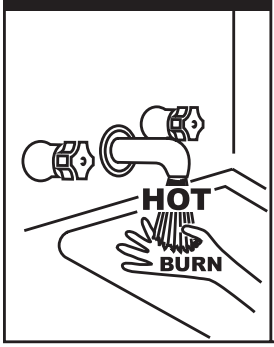

Water temperature over 125°F (52°C) can cause severe burns instantly resulting in severe injury or death.

Children, the elderly and the physically or mentally disabled are at highest risk for scald injury.

Feel water before bathing or showering.

Temperature limiting devices such as mixing valves must be installed when required by codes and to ensure safe temperatures at fixtures.

Hot water temperatures required for automatic dishwasher and laundry use can cause scald burns resulting in serious personal injury and/or death. Table 13 shows the approximate time-to-burn relationship for normal adult skin.

The temperature at which injury occurs varies with the person's age and duration of exposure. The slower response time of children, the elderly or disabled persons increases the hazards to them. If anyone using hot water provided by the water heater being installed fits into one of these groups or if there is a local code or state law requiring a certain water temperature at the point of use, then special precautions must be taken.

In addition to using the lowest possible temperature setting that satisfies the demand of the application a mixing valve can be installed at the water heater (see Figure 7 on page 14) or at the hot water taps to further reduce system water temperature.

Never allow small children to use a hot water tap or draw their own bath water. Never leave a child or disabled person unattended in a bathtub or shower.

The water heater should be located in an area where the general public does not have access to set temperatures.

Setting the Operating Set Point at 120°F (49°C) will reduce the risk of scalds. Some States require settings at specific lower temperatures.

TABLE 13

Water Temperature °F (°C)	Time for 1st Degree Burn (Less Severe Burns)	Time for Permanent Burns 2nd & 3rd Degree (Most Severe Burns)
110 (43)	(normal shower temp.)	
116 (47)	(pain threshold)	
116 (47)	35 minutes	45 minutes
122 (50)	1 minute	5 minutes
131 (55)	5 seconds	25 seconds
140 (60)	2 seconds	5 seconds
149 (65)	1 second	2 seconds
154 (68)	instantaneous	1 second
(U.S. Government Memorandum, C.P.S.C., Peter L. Armstrong, Sept. 15, 1978)		

The water heaters covered in this manual are equipped with an electronic control system to regulate water temperature inside the storage tank. The control system senses temperature from two factory installed temperature probes, one installed in the top of the storage tank and one installed near the bottom, See Top View on page 8 and Figure 4 on page 9 for location.

The "Operating Set Point" is adjusted to regulate water temperature inside the storage tank. This is an adjustable user setting in the control system's "Temperatures Menu." This and all control system menus are accessed through the UIM (user interface module) located on the front of the water heater, see Figure 57.

The Operating Set Point is adjustable from 90°F (32°C) to 180°F (82°C). The factory setting is 120°F (49°C). See Operating Set Point And Differential Adjustment on page 48 for instructions on how to adjust the Operating Set Point and other user settings.

Set the Operating Set Point at the lowest setting which produces an acceptable hot water supply. This will always provide the most energy efficient operation.

MODULATION

The water heaters covered by this manual are capable of modulating their firing rate. The CCB monitors the water temperature in the tank and regulates the firing rate to achieve the target temperature setpoint. The firing rate is dictated by the hot water draw, proximity to the tank temperature setpoint, and various other temperature limitations.

HIGH TEMPERATURE APPLICATIONS

Higher operating temperatures cause more wear on all water heaters and will decrease the life span of the water heater. Consider installing a small booster water heater for high temperature applications, such as commercial dishwashers, to raise the outlet temperature from the larger primary water heater to the desired point of use temperature.

Contact your local distributor or call the technical support phone number listed on the back cover of this manual for further technical assistance.

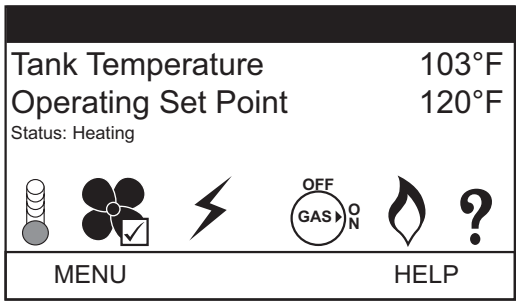

Figure 57

CONTROL SYSTEM OPERATION

OVERVIEW

The water heaters covered in this manual are equipped with an electronic control system that regulates water temperature inside the storage tank. Heating cycles and ignition are managed by the control system. The ECO (energy cut out), flame sensor, pressure switches and temperature probes are monitored by the control system. The Combustion Blower, Spark Ignition Transformer, 24 Volt Gas Valve and anode rods are all powered by the control system.

The main components of the control system are a UIM (user interface module) and a CCB (central control board). The UIM is located on the top front side of the water heater. The CCB is mounted on top of the water heater inside a protective enclosure. This unit is equipped with an Enable/Disable switch. To operate unit, make sure the switch is set to Enable. See Features And Components on page 7 for location of these and all water heater components.

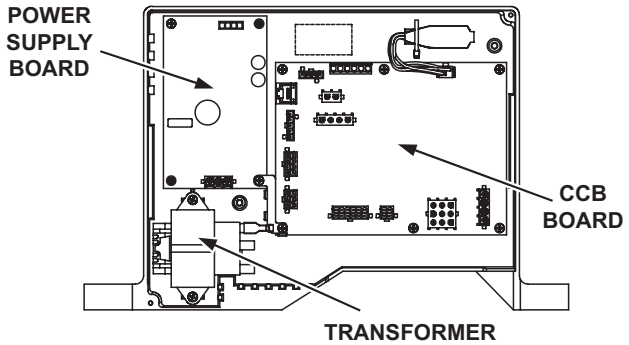

Figure 58

CONTROL SYSTEM NAVIGATION

All operational information and user settings are displayed and accessed from the UIM. The UIM houses the control system's LCD Touch Display (liquid crystal display).

THE DESKTOP SCREEN

During normal operation the control system will display the "Desktop" screen on the LCD Touch Display which is the default screen. The control system will return to the Desktop screen when there are no active Fault or Alert conditions or when there has been no user input for several minutes.

- Manufacturer and water heater model information is displayed in Title Bar at the top of the Desktop screen. Menu titles are displayed in the Title Bar when navigating the control system menus.
- The first temperature shown on the Desktop screen, Tank Temperature, is the temperature of the water inside the water heater's storage tank.
- The second temperature shown on the Desktop screen is the Operating Set Point. The Operating Set Point is the temperature at which the control system will maintain the water inside the storage tank.
- Beneath the Operating Set Point is the "Status" line. The Status line shows the current operational state of the control system in real time, see Table 15 on page 47 for a description of the various operational states.
- The Desktop screen also displays animated "Status Icons" to convey operational information, see Table 14 on page 46 for descriptions of the Status Icons.

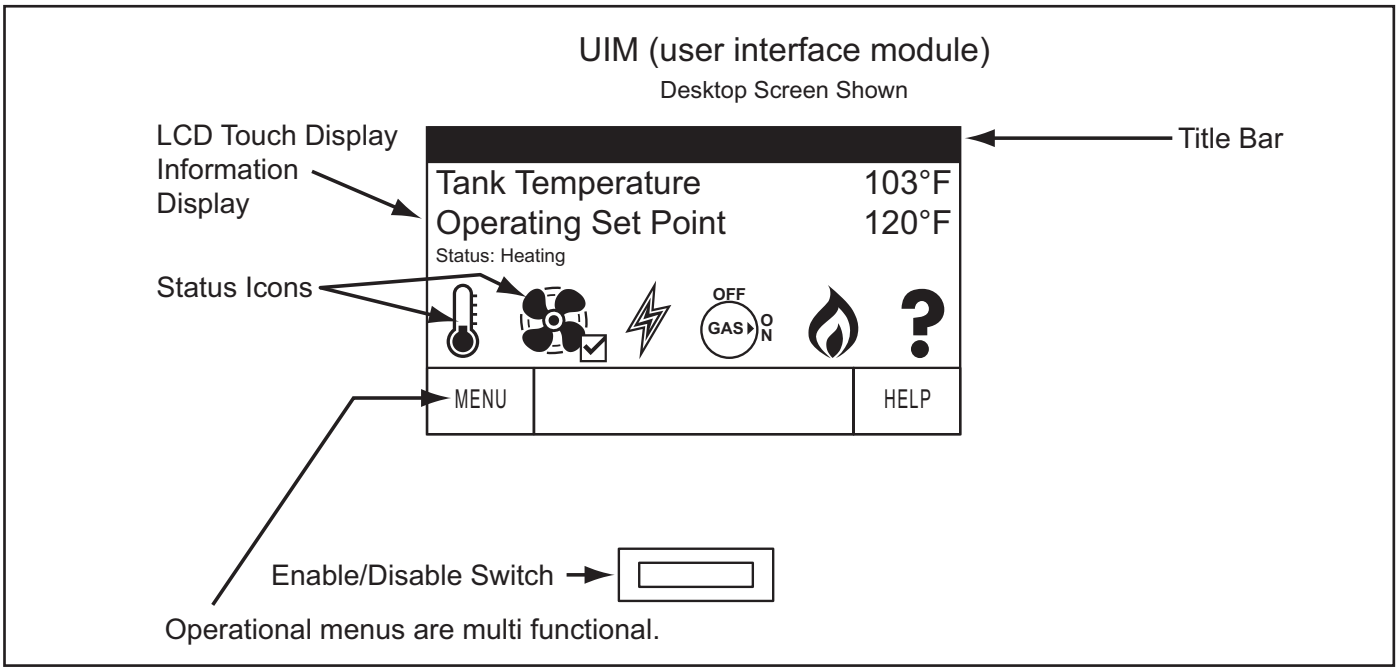

Figure 59

STATUS ICONS

The Status Icons are displayed on the Desktop screen and convey operational and diagnostic information. The icons are described in the table below. See Figure 59 on page 45. Ensure the water heater is properly grounded. Flame sensing requires an adequate earth ground. If the water heater is not properly grounded it will cause Ignition Failure. See Electrical Connections on page 57.

TABLE 14

Icon	Description
	Water temperature in the tank has fallen. Shaded area of the animated thermometer icon will rise and fall in response to water temperature in the storage tank as sensed from the Upper and Lower Temperature Probes. See page 8 and Figure 4 on page 9 for location of Temperature Probes.
	Water temperature in the tank has reached the Operating Set Point. The control system enters the Standby mode.
	The control is unable to initiate a heating cycle. This will happen whenever a Fault condition is detected by the control system or when the Enable/Disable switch on front panel is in disable position or Building Management system Enable/Disable circuit is an open circuit. Display will read "Status: Water Heating Disabled". For more information see Enable / Disable Circuit (For Building Management Systems) on page 42.
	The Combustion Blower is being energized.
	The Spark Igniter is being energized. See Figure 2 on page 7 for Spark Igniter location.
OFF GAS ON	The 24 Volt Gas Valve is being energized.
	The control system has sensed flame at the Main Burner from the flame sensor. See the Sequence Of Operation Flow Chart on page 58 and Figure 2 on page 7.
!	The control system has declared a Fault condition and must be inspected/serviced by a Qualified Service Agent. Fault message details can be viewed in the Current Fault menu. Heating operation is disabled (lock out) until the condition that caused the Fault is corrected. Power to the water heater must be cycled off and on at the breaker to reset the control system. **NOTE:** Cycling power will not reset the control system if the condition that caused the Fault has not been corrected.
?	The control system has declared an Alert condition and must be inspected/serviced by a Qualified Service Agent. The water heater will continue to operate during an Alert condition.

OPERATING STATES

The current operational state of the water heater is displayed on the Desktop screen as the "Status." The common operational states are described in the table below. See Figure 59 on page 45. Ensure the water heater is properly grounded. Flame sensing requires an adequate earth ground. If the water heater is not properly grounded it will cause Ignition Failure. See Electrical Connections on page 57.

TABLE 15

State	Description
Standby	The water heater is not in an active heating cycle. IE: the Tank Temperature is at or above the Operating Set Point.
Input Verification	The control system is conducting a diagnostic check at the beginning of a heating cycle.
Water Heating Disabled	A Fault condition is detected by the control, the Enable/Disable switch on front panel is in disable position, or the Building Management system Enable/Disable is an open circuit.
Pre-Purge	The Combustion Blower is energized to flush residual flue gases from the combustion chamber prior to ignition.
Spark Igniter Energized	The Spark Igniter is energized.
Ignition Activation	The 24 Volt Gas Valve is energized and opens to allow fuel gas to flow to the Main Burner.
Ignition Verification	The control system is monitoring the flame sensor for the required minimum flame sensing current. Ensure the water heater is properly grounded. Flame sensing requires an adequate earth ground. If the water heater is not properly grounded it will cause an Ignition Failure.
Inter-Purge	The Combustion Blower is energized to flush residual fuel gas from the combustion chamber after a failed ignition attempt.
Heating	Ignition was successful, flame sensing current has been established. The water in the storage tank is being heated.
Post-Purge	The Combustion Blower is energized to flush residual flue gases from the combustion chamber at the end of a heating cycle.
Fault	The control system has detected a Fault condition. Heating operation is disabled until the Fault condition is corrected. Power to the water heater must be cycled off and on at the breaker to reset the control system. **NOTE:** Cycling power will not reset the control system if the condition that caused the Fault has not been corrected.

CONTROL SYSTEM MENUS

From the Desktop screen pressing "Menu" on the LCD Touch Display will display the "Main Menu" this is where all control system menus are located. The table below describes the control system menus.

TABLE 16

Menu	Description
Temperatures	Most commonly accessed menu. Contains the Operating Set Point and Differential user settings.
Heater Status	This menus displays the current state of all pressure switches and the ECO (open/closed). The on/off status of the Combustion Blower, gas valve, Spark Igniter, flame sensor and other monitored water heater components are displayed in this menu.
Display Settings	Temperature units (°F or °C), the LCD appearance (brightness/contrast) and backlight delay user adjustable settings are located in this menu.
Heater Information	Elapsed time of operation, total heating cycle time, heating cycle count, heating on time along with UIM and CCB software revisions can be viewed in this menu.
Current Fault	Displays any current Alert or Fault messages.
Fault History	This control system menu retains a list of the last nine (9) Fault and Alert messages with a time stamp. The newest event will replace the oldest. Faults will clear after 30 days.
Fault Occurrence	This control system menu retains a running total of how many times each Fault condition has occurred since the water heater was first installed. The data does not clear and cannot be reset.
Restore Factory Defaults	This control system feature allows the user to restore control system user settings to their factory default settings. Display Settings preferences ARE NOT changed when factory defaults are restored.
Help Screens	Text based operational and user information explaining how to change user settings, navigate the control system menus and icon descriptions.

USER SETTINGS & CONTROL SYSTEM MENUS

TEMPERATURES MENU

Operating Set Point And Differential Adjustment

The Operating Set Point is adjustable from 90°F (42°C) to 180°F (82°C). The factory setting is 120°F (49°C). The Differential is adjustable from 2° to 20°. The factory setting is 8°. These user settings are accessed from the Temperatures menu. The following instructions will explain how to adjust these settings and navigate the control system menus.

When the water temperature sensed by the control system from the two (upper and lower) Temperature Probes reaches the Operating Set Point the control system will end the heating cycle. A heating cycle will be activated again when the sensed water temperature drops below the Operating Set Point minus the Differential setting.

NOTE: Lower Differential settings may cause excessive heating cycles (short-cycling) which can cause premature failure of heater components. Set the Differential at the highest setting which produces an acceptable hot water supply. Set the Operating Set Point to the lowest setting which produces an acceptable hot water supply for most efficient use.

DESCRIPTION/ACTION	DISPLAY
From the Desktop screen, press MENU. The "Main Menu" screen will be displayed.	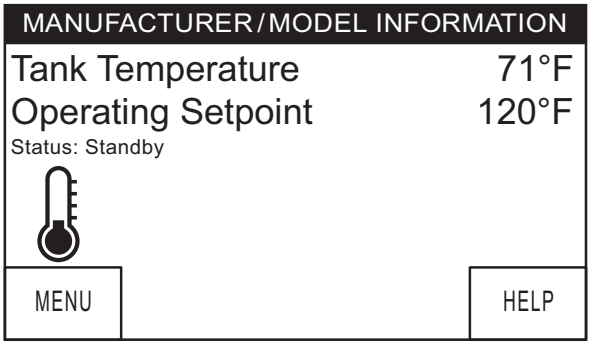
The Main Menu is where all control system menus are listed, see Table 16 on page 47 for a complete list and description of control system menus. Use the Up and Down slidebar to view all control system menus from the Main Menu. Press "Temperatures" to access the Temperature menu.	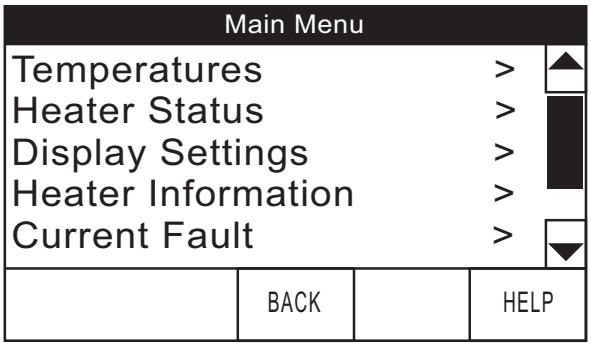
Press "Operating Setpoint" to access the temperature setpoint menu. Press "CHANGE" to activate the adjustment mode for this menu item. **NOTE:** Higher Temperature settings increase wear and operating costs. Set the Operating Set Point to the lowest setting which produces an acceptable hot water supply. This will always provide the most energy efficient operation and longer life.	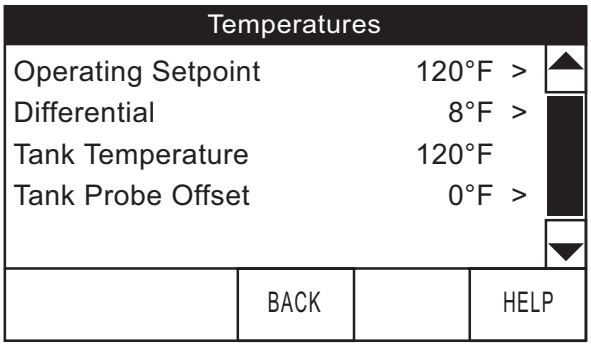
Use the "+" and "-" Buttons to change the current setting. Press "ACCEPT" to save the new setting. Press "BACK" to discard changes and return to the previously saved setting. **NOTE:** Use this same procedure to change the Differential setting and other adjustable user settings in the control system menus.	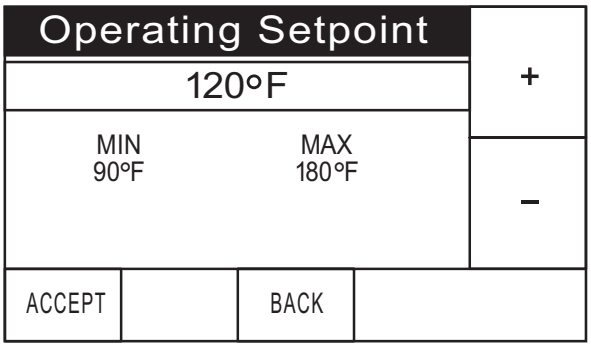

TEMPERATURES MENU (CONT)

DESCRIPTION/ACTION	DISPLAY
• **Differential** - Adjustable user setting that changes the tank temperature differential with a range of 2° to 20°F. The factory setting is 8°F. • **Tank Temperature** - Non adjustable. Control system sensed temperature (averaged from upper & lower temperature probes). • **Tank Probe Offset** - adjustable user setting, range -5° to +5° (factory setting 0°). **NOTE:** These settings should only be used if hot water supply temperature varies greatly from the Operating Set Point setting. The Tank Probe Offset is used to calibrate control system temperature sensing. This can improve the precision of temperature control in the storage tank and at points of use. This feature can also be used to compensate for building recirculation loops (hot water returning to the storage tank) that may cause the heating cycles to terminate prematurely. Example: If the current sensed temperature from a temperature probe is 120°F (49°C) and the Offset setting is adjusted to a value other than 0°, the control system would calibrate or "offset" the sensed temperature from the probe and the averaged tank temperature. Heating cycles would be activated and deactivated based on the calibrated (offset) temperature. A -5° setting results in +5° hotter water. These settings are adjusted in the same way described for Operating Set Point And Differential Adjustment on page 48.	Temperatures Operating Setpoint 120°F > Differential 8°F > Tank Temperature 120°F Tank Probe Offset 0°F > BACK HELP

HEATER STATUS MENU

DESCRIPTION/ACTION	DISPLAY
Press Heater Status from the Main Menu to enter this menu. This menu contains non adjustable operational information. Use the slidebar to navigate the menu. • **Status** - displays the current Operating State, see Table 15 on page 47. • **ECO Contact**, **Low Gas PS**, **Blocked Inlet PS**, **Blocked Outlet PS**, **Blower Prover PS** - displays the current state of the switch contacts; open or closed. • **Igniter On**, **Gas Valve On** - displays whether or not the control system is currently energizing these water heater components; yes = energized, no = de-energized. • **Flame Detected** - displays whether or not the control system has detected Main Burner flame during ignition from the flame sensor. • **Blower RPM CMD –** displays the controls commanded blower rpms. **Blower RPM –** displays the actual blower rpms. • **Anode Current, Anode Tank Voltage, Anode Drive Voltage –** displays the powered anodes current and voltage levels. **NOTE:** Menu displays shown are for informational purposes only. The actual heater display will vary dependent upon the operational state of the water heater.	Top of Menu Heater Status Status: Standby ECO Contact Closed Low Gas PS Closed Blocked Inlet PS Closed Blocked Outlet PS Closed Igniter On No BACK HELP Middle of Menu Heater Status Gas Valve On No Flame Detected No Blower RPM CMD 0 Blower RPM 0 Anode Current 51.500mA Anode Tank Voltage 2.641V BACK HELP Bottom of Menu Heater Status Flame Detected No Blower RPM CMD 0 Blower RPM 0 Anode Current 51.500mA Anode Tank Voltage 2.641V Anode Drive Voltage 3.539V BACK HELP

DISPLAY SETTINGS

DESCRIPTION/ACTION	DISPLAY
Press Display Settings from the Main Menu to enter this menu. This menu contains adjustable display options for viewing information on the UIM's LCD screen. Use the Slidebar to navigate the menu. • **Temperature Units** - Adjustable user setting that changes temperature units display to Celsius °C or Fahrenheit °F. • **Backlight Delay** - Adjustable user setting that determines how long the UIM's LCD backlight remains illuminated after a key has been pressed. Available settings are; Always Off, 10, 30 or 60 seconds and Always On. • **Contrast** - Adjustable user setting to adjust the UIM's LCD screen contrast between text and background. **NOTE:** These settings are adjusted in the same way described for the Operating Set Point And Differential Adjustment on page 48.	Display Settings Temperature Units °F > Brightness 5 > Backlight Delay 30s > Language English > BACK HELP

HEATER INFORMATION

DESCRIPTION/ACTION	DISPLAY
Press Heater Information from the Main Menu to enter this menu. This menu contains non adjustable operational information. • **Elapsed Time** - Total accumulated time the control system (water heater) has been energized. • **Burner On Time** - Total accumulated time the control system has been in the heating operating state; burner run time. • **Total Cycle Count** - Total accumulated count of heating cycles. • **CCB Version** - Software version for central control board. • **Config CRC** - Verifies the configuration key matches the CCB programming. • **UIM Version** - Software version for user interface module. • **Use External Enable** - Enables/Disables the external enable circuit. • **External Enable Status** - Displays whether or not the external enable circuit has been activated. • **Ignition Trials** - Displays the number of ignition trials allowed. **NOTE:** Historical data is stored in the configuration key. If this "key" is replaced during servicing the historical data will be lost. The data stored in the new configuration key will no longer reflect the entire history of the water heater. The Elapsed Time, Burner On Time and Cycle Count indicate age, usage and wear. If the Cycle Count per day is high (divide cycle count by days to determine cycles per day) or the cycle duration is short (determine burner on time total minutes, divide burner on time total minutes by cycle count) consider rasing the Differential setting to avoid short cycling and excessive component wear, see Operating Set Point And Differential Adjustment on page 48. This historical data can also be used to assist facilities managers in forecasting planned replacement of equipment to help avoid lengthy and costly hot water supply interruptions.	Heater Information Elapsed Time 0days 0hrs 43mins > Burner On Time 0days 0hrs 1mins Use External Enable No > External Enable Status No > Ignition Trials 3 tries > Modulation Enabled > BACK HELP **Bottom of Menu** Heater Information Ignition Trials 3 tries > Modulation Enabled > Total Cycles Counter 2 > Ignition Failure Count 1 > Flame Loss Count 0 > CCB Version 3.17 > BACK HELP Heater Information Ignition Failure Count 1 > Flame Loss Count 0 > CCB Version 3.17 > Config CRC 0xD7A7 > UIM Version 2.58 > Configuration Raw 0x510C > BACK HELP

CURRENT FAULT

DESCRIPTION/ACTION	DISPLAY
Press Current Fault from the Main Menu to enter this menu. This menu contains non adjustable operational information. Use the Slidebar to navigate the menu. This menu contains the current Fault or Alert error message. The time the Fault or Alert message occurred appears directly below. A brief description of what causes the particular Fault or Alert condition appears below that. Pressing "ADVANCED" will give more detailed service information and a list of possible causes for the Fault or Alert condition. See Fault And Alert Messages on page 61 for more detailed information and diagnostic procedures. If there is no Fault or Alert condition active this menu will not contain any information, "(none)" will be shown next to Current Fault in the Main menu.	Blocked Exhaust 0 days 0 hr 0 min ago Error Code: A8-1201 ! Restriction in exhaust pipe. Check exhaust pipe and termination for blockage. Press the Advanced button for BACK ADVANCED

FAULT HISTORY

DESCRIPTION/ACTION	DISPLAY
Press "Fault History" from the Main Menu to enter this menu. This menu contains non adjustable operational information. Use the Slidebar to navigate the menu. This menu contains a list of the last nine (9) Fault and Alert messages with a time stamp. The newest event will replace the oldest. Faults will clear after 30 days. Press the Fault to view details for each Fault or Alert message stored.	Fault History 1: Upper Temp Probe (Open) (47) > 0 days 2 hrs 37 mins ago > 2: Hardware Failure (1A) > 0 days 2 hrs 37 mins ago > 3: Upper Temp Probe (Open) (47) > 0 days 2 hrs 40 mins ago > BACK HELP

FAULT OCCURRENCE

DESCRIPTION/ACTION	DISPLAY
Press Fault Occurrence from the Main Menu to enter this menu. This menu contains non adjustable operational information. Use the Slidebar to navigate the menu. This menu contains a running total of how many times each Fault condition has occurred since the water heater was first installed. **NOTE:** Historical data is stored in the configuration key. If this "key" is replaced during servicing the historical data will be lost. The data stored in the new configuration key will no longer reflect the entire history of the water heater.	Fault Occurrence Ignition Failure 0 > ECO 0 > Low Gas Pressure 1 > Blocked Intake Air 1 > Blocked Exhaust 1 > External Input 0 > BACK HELP

RESTORE FACTORY DEFAULTS

DESCRIPTION/ACTION	DISPLAY
Press Restore Factory Defaults from the Main Menu to enter this menu. To restore the adjustable user settings to their factory default settings press “YES.” The display will show text confirming the factory default settings have been restored. Press NO to exit the Restore Factory Defaults menu.	Restore Defaults ! Are you sure you want to restore the system to the factory defaults? Yes No

SERVICE CONTACT INFORMATION

The control system has a discrete menu that Installing contractors and/or service agents can access to enter contact information for their customers. This contact information will be displayed with all Fault and Alert messages.

DESCRIPTION/ACTION	DISPLAY
From the Desktop Screen (see Figure 59 on page 45) press and hold down the middle (unmarked) area located between the "MENU" and "HELP" buttons for 15 seconds to activate the "Contact Information" screen. It is located between the "MENU" and "HELP" buttons. This will launch a discrete menu where personalized contact information can be entered. Using the Slidebar select (highlighted in black) the "Show Contact" menu item. Press "ACCEPT" to activate the adjustment mode for this parameter.	Contact Information Show Contact No >▲ Change Contact Name >▌ Change Contact Phone >▌ Current Contact Info: (000) 000-0000 ▼ BACK HELP
Press the "+" and "-" Buttons to change the setting from "No" to "Yes" and press "ACCEPT" to save the new setting. **NOTE:** The Access Code at the bottom of the Service Contact Information screen is for manufacturing engineering purposes only. There are no user settings or information accessed through this menu item.	Contact Information Show Contact Yes >▲ Change Contact Name >▌ Change Contact Phone >▌ Current Contact Info: (000) 000-0000 ▼ BACK HELP
Press the "Change Contact Name" to enter this menu.	Contact Information Show Contact Yes >▲ Change Contact Name >▌ Change Contact Phone >▌ Current Contact Info: (000) 000-0000 ▼ BACK HELP
Press the "+", "-", "<", and ">" icons to enter your name or the name of your company. When finished press "ACCEPT" to save the new Contact Name. The control system will return to the discrete menu. Follow these same instructions to change the Contact Phone Number.	Change Contact Name ^ + – ACCEPT < BACK >
When the new Contact Name and Contact Phone number have both been updated, press "BACK" to return to the Desktop screen.	Contact Information Show Contact Yes >▲ Change Contact Name >▌ Change Contact Phone >▌ Current Contact Info: YOURCOMPANYNAMEHERE (123) 456-7890 ▼ BACK HELP

START UP

PRIOR TO START UP

Installation and start up of this water heater requires abilities and skills equivalent to that of a licensed tradesman in the field involved, see Qualifications on page 6.

Do not place the water heater in operation if any part has been exposed to flooding or water damage. Immediately call a qualified service technician to inspect the water heater and to replace any part of the control system and any gas control which has been under water.

Light the water heater in accordance with the Lighting and Operation Instruction label on the water heater and in this manual on page 54.

The water heaters covered by this manual are equipped with an electronic control system (see page 45) which automatically sequences the Combustion Blower, pre and post purging of the combustion chamber, the spark transformer, the 24 Volt Gas Valve, Main Burner ignition, and flame sensing. The control system will lock out after three unsuccessful ignition attempts.

Before attempting start up, thoroughly study and familiarize yourself with the exact Sequence Of Operation. See the Sequence of Operation Flow Chart on page 58. Ensure the water heater is properly grounded. Flame sensing requires an adequate earth ground. If the water heater is not properly grounded it will cause Ignition Failure. See Electrical Connections on page 57.

Be certain that the water heater is full of water, that air is purged from the gas and water lines and that there are no leaks in the gas and water lines. Ensure all inlet water valves are open.

FILLING THE WATER HEATER

Follow these steps to fill the water heater prior to start up.

1. Close the heater drain valve.
2. Open a nearby hot water faucet to permit air in system to escape.
3. Fully open the cold water inlet valve allowing the piping and water heater to fill with water.
4. Close the hot water faucet opened in Step 2 as water starts to flow.

INITIAL START UP

REQUIRED TEST EQUIPMENT

- One U-tube manometer, recommended ranges; 0-14” W.C. (0-3.5 kPa) and 0-35” W.C. (0-8.7 kPa) or pressure gauges.
- One digital manometer can be used in place of U-tube manometers or pressure gauges. Recommended ranges; -14.00 to +14.00” W.C. (0-3.5 kPa) resolution 0.01” W.C. and 0-35” W.C. (0-8.7 kPa) resolution 0.10” W.C.

NOTE: All test equipment must be acclimated to ambient temperature before calibration and use.

PREPARATION

1. Using the control system menus, change the Operating Set Point to the lowest temperature setting, see Operating Set Point And Differential Adjustment on page 48.
2. Turn the water heater’s Enable/Disable switch to the "Disabled" position.
3. Close the Main Gas Shut Off Valve, see Figure 54 on page 40.
4. Wait five (5) minutes for any residual gas to clear.
5. Connect the manometer to the supply gas pressure port on the gas valve, see Figure 60 and Figure 61.

   On the water heaters covered by this manual there are test ports for supply and manifold gas pressure readings on the gas valve. Using a small flat tip pocket screw driver - open the needle valve inside the supply gas pressure test port one full turn only; turn the needle valve screw counter-clockwise to open the valve. Slide the manometer sensing tube over the top of the test port, see Figure 60 and Figure 61.
6. Open the Main Gas Shutoff Valve.
7. Measure and record the supply gas pressure, this is a “static” supply gas pressure reading; while the water heater is not firing. Adjust supply gas pressure as necessary, see Supply Gas Pressure Adjustment on page 55.

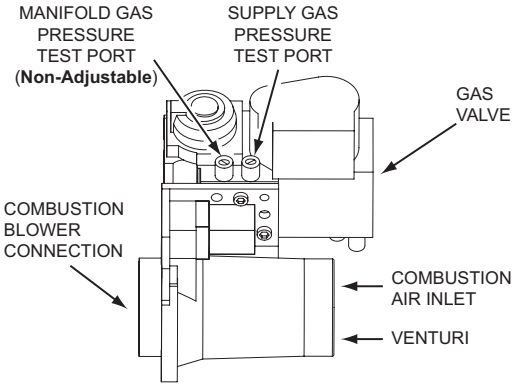

GAS VALVE / VENTURI ASSEMBLY TOP VIEW

Figure 60

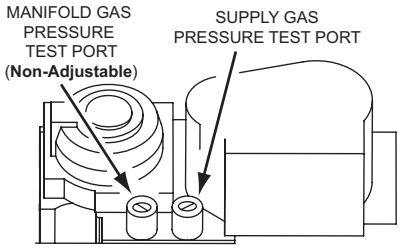

GAS VALVE TOP DETAIL VIEW

Figure 61

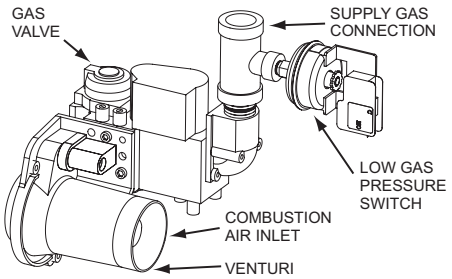

GAS VALVE / VENTURI ASSEMBLY SIDE VIEW

Figure 62

LIGHTING THE WATER HEATER

LIGHTING & OPERATION LABELS

The instruction label below is affixed to the water heater's covered by this manual at the factory and must be followed when lighting and operating the water heater.

FOR YOUR SAFETY READ BEFORE LIGHTING

WARNING: If you do not follow these instructions exactly, a fire or explosion may result causing property damage, personal injury or loss of life.

FLAMMABLE

BEFORE OPERATING: ENTIRE SYSTEM MUST BE FILLED WITH WATER AND AIR PURGED FROM ALL LINES.

A. This appliance does not have a pilot. It is equipped with an ignition device which automatically lights the burner. **Do not try to light the burner by hand.**

B. BEFORE OPERATING smell all around the appliance area for gas. Be sure to smell next to the floor because some gas is heavier than air and will settle on the floor.

WHAT TO DO IF YOU SMELL GAS

- Do not try to light any appliance.
- Do not touch any electric switch; do not use any phone in your building.
- Immediately call your gas supplier from a neighbor's phone. Follow the gas supplier's instructions.
- If you cannot reach your gas supplier, call the fire department.

C. Use only your hand to push in the control buttons. Never use tools. If the control buttons will not push in, don't try to repair them, call a qualified service technician. Force or attempted repair may result in a fire or explosion.

D. Do not use this appliance if any part has been under water. Immediately contact a qualified installer or service agency to replace a flooded water heater. Do not attempt to repair the unit. It must be replaced!

OPERATING INSTRUCTIONS

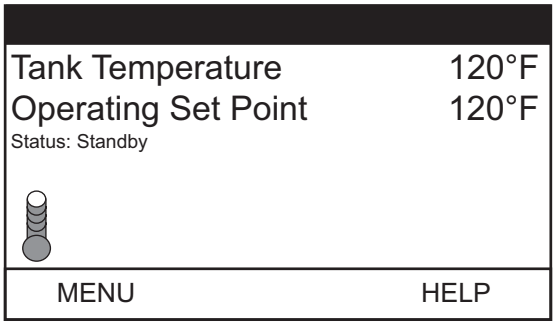

ENABLE/DISABLE SWITCH

1. STOP! Read the safety information above on this label.
2. Set the Enable/Disable switch on the control panel to the Enable position.
3. Set the thermostat to the lowest setting.
4. Set the Enable/Disable switch on the control panel to the Disable position.
5. This appliance is equipped with a device which automatically lights the burner. **DO NOT TRY TO LIGHT THE BURNER BY HAND.**
6. Wait five (5) minutes to clear out any gas. If you then smell gas, STOP! Follow "B" in the safety information above on this label. If you don't smell gas, go to the next step.
7. Turn on all electrical power to the appliance.
8. Set the Enable/Disable switch on the control panel to the Enable position.
9. Set the thermostat to the desired setting.

CAUTION: Hotter water increases the risk of scald injury. Consult the instruction manual before changing temperature.

10. If the appliance will not operate, follow the instructions "TO TURN OFF GAS TO APPLIANCE" and call your technician or gas supplier.

WARNING: TURN OFF ALL ELECTRIC POWER BEFORE SERVICING.

TO TURN OFF GAS TO APPLIANCE

1. Set the thermostat to the lowest setting.
2. Set the Enable/Disable switch on the control panel to the Disable position.
3. Turn off all electrical power to the appliance if service is to be performed.

SUPPLY GAS PRESSURE ADJUSTMENT

⚠ WARNING

Fire and Explosion Hazard

- Do not use water heater with any gas other than the gas shown on the rating label.
- Excessive gas pressure to gas valve can cause serious injury or death.
- Turn off gas lines during installation.
- Contact a qualified installer or service agency for installation and service.

Supply gas pressure shall be measured while the water heater is not firing (static pressure) AND while the water heater is firing at full capacity (dynamic pressure).

If the supply gas pressure to the water heater is not between the required minimum and maximum values given in Table 3 on page 11 adjust the supply gas regulator as necessary. Adjust the supply gas regulator(s) per the regulator manufacturer's instructions to achieve the required "static" and "dynamic" supply gas pressure.

Multiple Water Heater Installations:

In multiple water heater installations or in installations where the installed water heater(s) share a common gas supply main with other gas fired appliances; the supply gas pressures shall be measured at each water heater with all gas fired appliances connected to a common main firing at full capacity.

On multiple water heater installations the supply gas line regulators shall be adjusted to provide gas pressure to each water heater within the minimum and maximum supply pressure requirements listed in Table 3 on page 11 with all gas fired appliances connected to a common gas main firing at full capacity.

NOTE: A pressure drop of more than 1.5" W. C. (0.37 kPa) when the Main Burner ignites is an indication of an inadequate supply of gas and can lead to ignition failure, rough starts and/or rough operation. If a drop of more than 1.5" W. C. (0.37 kPa) in supply gas pressure occurs when the Main Burner ignites, ensure the supply gas lines and regulator(s) are properly sized and installed. See the requirements for Supply Gas Regulator and Gas Supply Systems on page 13. See Supply Gas Line Installation on page 40 and Supply Gas Regulator on page 13. Ensure all requirements and installation instructions are maintained.

CHECKING THE FIRING RATE

If firing rate adjustment is required follow these instructions to determine the actual firing rate of the water heater:

NOTE: The heaters covered by this manual are capable of modulating their firing rate. The firing rate should be checked with the heater operating at it's full firing rate.

1. Ensure there are no other gas fired appliances connected to the gas meter firing during this test.
2. Contact the gas supplier to determine the heating value, in Btu per cubic foot, of the gas supply.
3. Connect a manometer to the supply gas pressure tap. Follow the instructions for Initial Start Up on page 53.
4. Start the water heater and ensure it is firing.
5. Check the supply gas pressure, refer to Table 3 on page 11 for correct pressure.
6. Locate the gas meter serving the water heater.
7. Time how long (in seconds) it takes for one cubic foot of gas to be used while the water heater is firing with a stop watch.
8. Use the formula below to “clock” the gas meter and determine the actual firing rate of the water heater based on the heating value (Btu per cubic foot) of the gas supply:

$$\frac{3600}{T} \times H = \text{Btu/hr}$$

Example:

$$\frac{3600}{12.6} \times 1050 = 300{,}000 \text{ Btu/hr (87.9 kW)}$$

- 3600 = seconds in one hour.
- T = time, in seconds, to burn one cubic foot of gas.
- H = heating value of gas in Btu per cubic foot.
- Btu/hr = actual firing rate of the water heater.

  NOTE: 1050 Btu per cubic foot is a standard value for natural gas. Standard propane gas Btu content is 2500 Btu per cubic foot. Btu values may change in certain areas and at high elevations. Check with the local gas utility company.

TO TURN OFF GAS SUPPLY

1. Change the Operating Set Point to the lowest temperature setting, see Operating Set Point And Differential Adjustment on page 48.
2. When the water heater has completed its shut down sequence and enters the standby mode, turn the water heater’s Enable/Disable switch to the “Disable” position. When in the "Disable" position the switch only removes electrical power from the gas valve so that water heating is disabled. The display, CCB, and other electrical components will still be energized and the display will read "Water Heating Disabled".
3. Close Main Gas Shutoff Valve, see Figure 54 on page 40.

HIGH ALTITUDE INSTALLATIONS

⚠ WARNING

Fire and Explosion Hazard

- Under no circumstances should the input exceed the rate shown on the water heater’s rating label.
- Overfiring could result in fire or explosion.
- Gas and carbon monoxide detectors are available.

⚠ WARNING

Breathing Hazard - Carbon Monoxide Gas

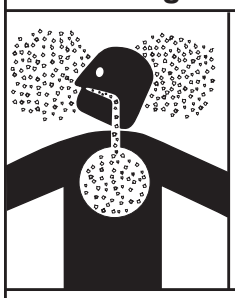

- Under no circumstances should the input exceed the rate shown on the water heater’s rating label.
- Overfiring could result in damage to the water heater and sooting.
- Gas and carbon monoxide detectors are available.

Breathing carbon monoxide can cause brain damage or death. Always read and understand instruction manual.

The water heaters covered by this manual are certified for use without modification for altitudes up to 10,100 feet (3,078 m).

Most gas utility companies de-rate their gas for high altitudes, making it unnecessary to install high altitude orifices.

For installations above 10,100 feet call the technical support phone number listed on the back cover of this manual for further technical assistance. Call the local gas or utility company to verify Btu per cubic foot content before calling for technical assistance and have that information available.

NOTE: The actual firing rate of the water heater must not exceed the input rating on the water heater's rating label under any circumstances.

NOTE: Due to the input rating reduction at high altitudes, the output rating of the water heater is also reduced and should be compensated for in the sizing of the equipment.

TROUBLESHOOTING

INSTALLATION CHECKLIST

The list below represents some of the most critical installation requirements that, when overlooked, often result in operational problems, down time and needless parts replacement. This is not a complete list. Before performing any troubleshooting procedures use the list below to check for installation errors. Costs to correct installation errors are not covered under the limited warranty. Ensure all installation requirements and instructions in this manual have been maintained and followed.

WATER HEATER LOCATION

1. Ensure proper clearances to combustibles are maintained and there is sufficient room to service the water heater. See Clearance To Combustible Materials on page 12.
2. Ensure the area is free of corrosive elements and flammable materials. See the instructions on page16.

VENTING

1. Ensure the intake air and/or vent (exhaust) piping is the correct size for the installed length. See Venting Requirements on page 22.
2. Ensure the maximum equivalent feet of pipe has not been exceeded for the intake air and/or vent pipe. See Table 6 - PVC/CPVC and Polypropylene on page 23.
3. Ensure the maximum number of elbows has not been exceeded in the intake air and/or vent pipe. See Venting Requirements on page 22.
4. Ensure the intake air screen has been removed from the intake air connection on the water heater when installing the water heater in a Direct Vent configuration. See Figure 18 on page 25.
5. Ensure all exterior clearances for the intake air, vent, concentric, and low profile terminations are maintained. See Vertical Termination Installation on page 25, Sidewall Termination Installation on page 27, Concentric Termination Installation on page 30 and Low Profile Termination Installation on page 34. These clearances and those cited by local and national codes must be maintained.

GAS SUPPLY AND PIPING

1. Ensure a supply gas regulator has been installed for each water heater. See the requirements for a Supply Gas Regulator on page 13.
2. Ensure the supply gas line to each water heater meets the minimum supply gas line size requirements. See the requirements for the Gas Supply Systems on page 13 and the installation instructions on page 40 and 41.

CONDENSATE DRAIN

Ensure the condensate drain is properly connected to the exhaust elbow on the water heater and draining freely to a suitable floor drain. See Figure 8 on page 16 and Condensate Drain Installation on page 39.

ELECTRICAL CONNECTIONS

1. Ensure the power supply connections to the water heater are polarity correct. See the requirements for the Power Supply on page 13 and Electrical Wiring on page 41.
2. Ensure the water heater is properly grounded. Flame sensing requires an adequate earth ground. If the water heater is not properly grounded it will cause Ignition Failure.

SEQUENCE OF OPERATION

Read the Sequence of Operation below before attempting to correct any operational problems. Refer to the Features And Components section beginning on page 7 for the location of various water heater components described below. See the Sequence Of Operation Flow Chart on page 58 also.

1. When the control system is first powered, during boot up, it will display water heater model information during initialization. After a few moments the control system LCD Touch Display which is part of the UIM (user interface module) will display the default screen known as the "Desktop" screen.
2. If the control system determines that the actual water temperature inside the tank is below the programmed Operating Set Point minus the Differential setting, a heating cycle is activated.
3. The control system then performs selected diagnostic system checks. This includes confirming the low gas pressure, blocked exhaust, blocked intake and ECO (energy cut out) switch contacts are closed.
4. If all diagnostic checks are successfully passed, the control system energizes the Combustion Blower for pre-purge.
5. The control system energizes the Spark Ignition Transformer.
6. The control system energizes the 24 Volt Gas Valve allowing gas to flow to the Main Burner.
7. The control system monitors the flame sensor to confirm a flame is present at the Main Burner. If a flame is not verified during the ignition trial period the control system will try for ignition up to two more times. If flame can not be verified after three trials for ignition, the control system will lock out and display the “Ignition Failure” Fault message.
8. If a flame is verified, the control system will de-energize the Spark Ignition Transformer and enter the heating mode where it will continue heating the water until the Operating Set Point is reached. At this point, the control system will de-energize the 24 Volt Gas Valve and enter the post-purge cycle (approximately 30 seconds).
9. The water heaters covered by this manual are capable of modulating their firing rate. The firing rate is dictated by the hot water draw and various other temperature limitations.
10. The Combustion Blower will run for the duration of the post-purge cycle to purge the water heater of all combustion gases. When the post-purge cycle is complete, the blower is de-energized and will coast to a stop.
11. The control system now enters the standby mode while continuing to monitor the internal storage tank water temperature and the state of other system devices. If the tank temperature drops below the Operating Set Point minus the Differential setting, the control will automatically return to Step 2 and repeat the operating cycle.

SEQUENCE OF OPERATION FLOW CHART

Sequence is shown with Enable/Disable Switch in the Enable position

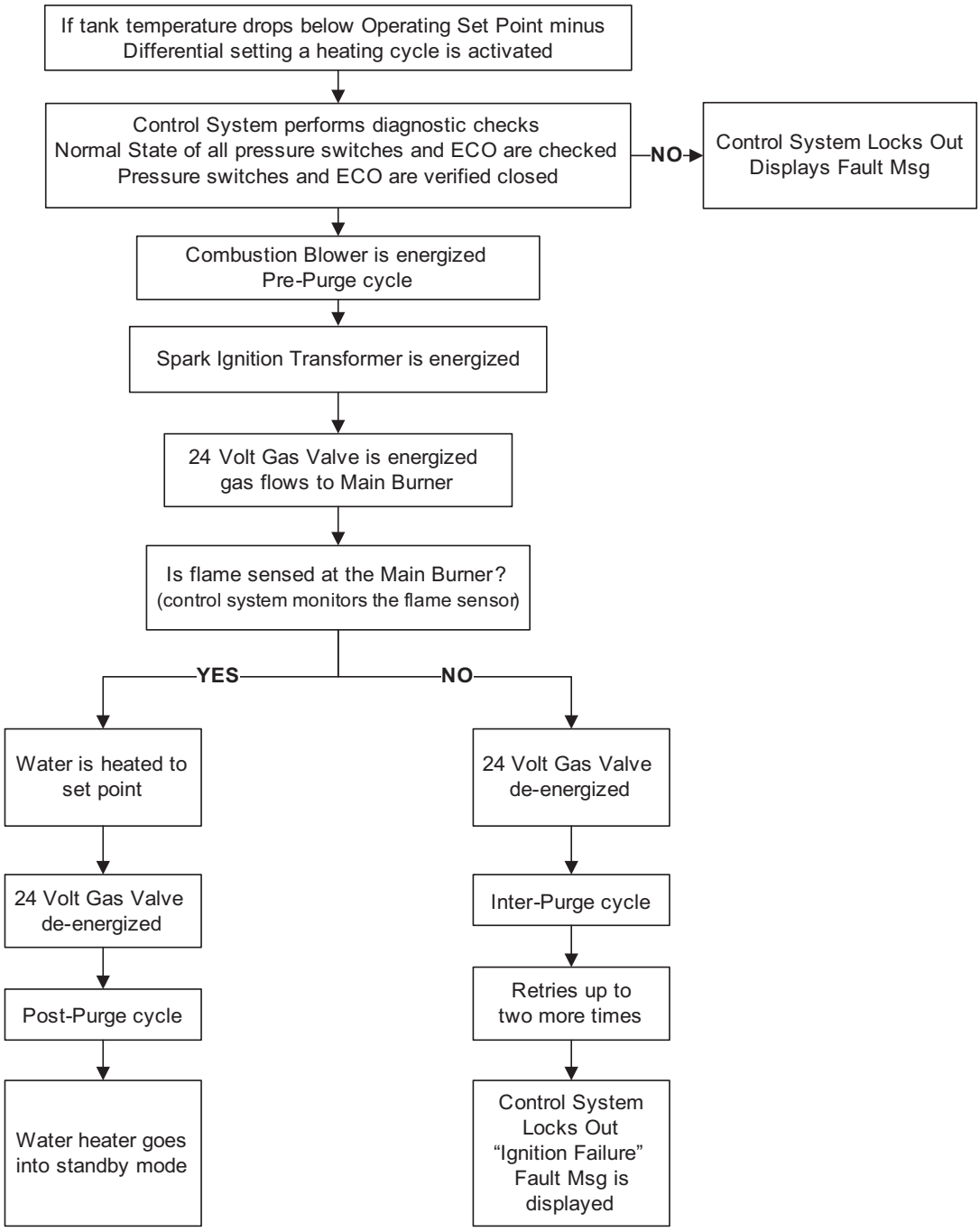

Figure 63

OPERATIONAL PROBLEMS

⚠ WARNING

Read and understand this instruction manual and the safety messages herein before installing, operating or servicing this water heater.

Failure to follow these instructions and safety messages could result in death or serious injury.

This manual must remain with the water heater.

This section of the manual is intended to be an aid in correcting common operational problems, it is not all inclusive. The installer may be able to observe and correct certain problems which might arise when the water heater is first put into operation or when it is re-fired after a prolonged shutdown. However, only qualified service agents, as defined in Qualifications on page 6, using appropriate test equipment, should perform any service procedures on the water heater.

NOTE: Call the technical support phone number listed on the back cover of this manual for further technical assistance or to locate a qualified service agent in your area.

INSTALLATION ERRORS

Operational problems on new installations are often the result of installation requirements that have been overlooked rather than failed components. IE: A "Low Gas Pressure" Fault condition is most often caused by low supply gas pressure rather than a defective Low Gas Pressure switch. Rough starting and rough operation are often caused by undersized supply gas lines and/or the absence of a supply gas regulator at the water heater.

Prior to performing any operational checks inspect the water heater installation to ensure all installation requirements and instructions have been maintained and followed. See the Installation Checklist on page 57.

NOTE: Costs to correct installation errors are not covered under the limited warranty.

ROUGH STARTING, ROUGH OPERATION

⚠ WARNING

Fire and Explosion Hazard

- Do not use water heater with any gas other than the gas shown on the rating label.
- Excessive gas pressure to gas valve can cause serious injury or death.
- Turn off gas lines during installation.
- Contact a qualified installer or service agency for installation and service.

- Undersized supply gas line (low volume of supply gas) - see Gas Supply Systems on page 13.
- Supply gas regulator is not installed per installation requirements (erratic gas supply volume/pressures) - see Supply Gas Regulator on page 13.
- Excessive supply gas pressure - see Table 3 on page 11 and Supply Gas Pressure Adjustment on page 55.
- Vent (exhaust) gas recirculation at the vent and intake air pipe terminations on Direct Vent installations - see Direct Vent Installation on page 24.
- Excessive equivalent lengths of intake air and/or vent (exhaust) piping installed - see Venting Requirements on page 22.
- Debris clogging/blocking the intake air screen(s) - see Figure 18 on page 25 and Figure 25 on page 27.
- Debris clogging/blocking the Main Burner - see Figure 2 on page 7.

MOMENTARY IGNITION

⚠ CAUTION

Burn Hazard

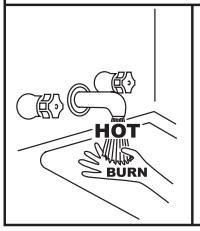

- The combustion chamber and burner sleeve and housing become very hot during operation.
- Do not reach into the burner housing or combustion chamber if the water heater is still hot.
- Allow the water heater to cool and always use gloves when handling the main burner.

If the Main Burner ignites momentarily but does not sustain ignition allow the water heater to try to ignite up to two more times until control system locks out and the Ignition Failure Fault message is displayed on the control system's LCD. If the water heater is experiencing rough starts - see Rough Starting, Rough Operation on this page. For momentary ignition problems without rough starting check the following:

- Undersized supply gas line (low volume of supply gas) - see Gas Supply Systems on page 13.
- Supply gas regulator is not installed per installation requirements (erratic gas supply volume/pressures) - see Supply Gas Regulator on page 13.
- See the list of possible causes and things to check and repair for the Ignition Failure Fault message on page 61.
- Debris clogging/blocking the intake air screen(s) - see Figure 18 on page 25 and Figure 25 on page 27.
- Debris clogging/blocking the Main Burner - see Figure 2 on page 7.

NOT ENOUGH OR NO HOT WATER

- No power to the water heater, check breaker and fuses.
- Enable/Disable switch in "Disabled" position. Set to Enable to allow unit to operate.
- Hot water supply valve(s) to fixtures closed.
- Operating Set Point is set too low, Differential setting is set too high. See Control System Operation on page 45.
- Tank Probe Offset is causing the heating cycles to terminate prematurely - see Temperatures Menu (cont) on page 49.
- Ensure there is not any external supervisory control (using the enable/disable circuit) disabling heating operation.
- The heating capacity of the water heater has been exceeded, the water heater is unable to meet demand.
- Colder incoming water temperature lengthening the time required to heat water to desired temperature.
- Hot water piping leaks, open faucets, water heater drain valve leaking or open.

- Sediment or lime scale accumulation may be affecting water heater operation. See Maintenance on page 63 for sediment and lime scale removal procedures.
- Water heater not firing at full input rating. Check actual firing rate of the water heater, see instructions on page 56. Note that the water heaters covered by this manual are capable of modulating their firing rate. The firing rate is dictated by the hot water draw and various other temperature limitations.

WATER IS TOO HOT

- Operating Set Point is set too high. See Operating Set Point And Differential Adjustment on page 48.
- If installed check Thermostatic Mixing Valve settings
- Tank Probe Offset setting improperly set - see Temperatures Menu (cont) on page 49.
- Lime build-up on temperature probes. Inspect and Clean.
- Improper water piping - see diagrams beginning on page 69.

NOISY OPERATION

- Sediment or lime scale accumulations can cause rumbling and pounding noises during heating cycles. See the Maintenance section of this manual beginning on page 63 for sediment and lime scale removal procedures.
- Normal operating noise of electrical components; Combustion Blower, transformer hum, relay contact closure.

WATER LEAKAGE IS SUSPECTED

- Ensure the water heater drain valve is tightly closed.
- Check cleanout opening for leaks - see Figure 4 on page 9.
- Check inlet/outlet water connections and system piping.
- Check the Temperature-Pressure Relief Valve.
  - Excessive water temperature.
  - Excessive water pressure.
  - Defective Temperature-Pressure Relief Valve.

NOTE: Excessive water pressure is the most common cause of Temperature-Pressure Relief Valve leakage. Excessive water system pressure is most often caused by "thermal expansion" in a "closed system." See Thermal Expansion and Closed Water Systems on page 14. The Temperature-Pressure Relief Valve is not intended for the constant relief of thermal expansion.

Temperature-Pressure Relief Valve leakage due to pressure build up in a closed system that does not have a thermal expansion tank installed is not covered under the limited warranty. Thermal expansion tanks must be installed on all closed water systems.

REPLACEMENT PARTS

Replacement parts may be ordered from the manufacturer, authorized service agencies or distributors. When ordering parts be sure to have the complete water heater Model Number, Serial Number and Series Number available. This information can be found on the rating label affixed to the water heater.

Refer to the parts list included with the water heater from the factory for more information or call the parts department or technical support phone number listed on the back cover of this manual for further assistance.

FAULT AND ALERT CONDITIONS

FAULT CONDITIONS

When the control system declares a Fault condition it will display a Fault message on the control system's LCD with an exclamation "!" mark. The control system will lock out and disable heating operation until the condition is corrected. The water heater must be serviced by a qualified service agent before operation can be restored.

ALERT CONDITIONS

When the control system declares an Alert condition it will display an Alert message on the control system's LCD with a question "?" mark. The water heater will continue to operate during an Alert condition but the water heater must be serviced by a qualified service agent as soon as possible.

RESETTING CONTROL SYSTEM LOCK OUTS

To reset the control system from a lock out condition; turn the power supply off at the breaker for approximately 20 seconds and then back on. Keep in mind; if the condition that caused the Fault has not been corrected, the control system will continue to lock out.

DIAGNOSTIC CHECKS

⚠ WARNING

Electrical Shock Hazard

- Turn off power at the branch circuit breaker serving the water heater before performing any service.
- Label all wires prior to disconnecting when performing service. Wiring errors can cause improper and dangerous operation.
- Verify proper operation after servicing.
- Failure to follow these instructions can result in personal injury or death.

The following section, Fault And Alert Messages on page 61, lists some of the messages the control system will display on the LCD when there are operational problems. This is not a complete list. Along with each of the Fault and Alert messages described there will be a list of possible causes and things to check and repair.

Only qualified service agents, as defined in Qualifications on page 6, using appropriate test equipment, should perform any service procedures on the water heater.

NOTE: If you are not qualified and licensed or certified as required by the authority having jurisdiction to perform a given task do not attempt to perform any of the diagnostic or service procedures described in the following section.

If you do not understand the instructions in the following section do not attempt to perform any procedures.

Call the technical support phone number listed on the back cover of this manual for further technical assistance or to locate a qualified service agent in your area.

⚠ WARNING

Jumping out control circuits or components can result in property damage, personal injury or death.

- Service should only be performed by a qualified service technician using proper test equipment.
- Altering the water heater controls and/or wiring in any way could result in permanent damage to the controls or water heater and is not covered under the limited warranty.

Any bypass or alteration of the water heater controls and/or wiring will result in voiding the appliance warranty.

FAULT AND ALERT MESSAGES

Call the technical support phone number listed on the back cover for further technical assistance or to locate a qualified service agent in your area.

POSSIBLE CAUSES - CHECK/REPAIR	DISPLAYED FAULT/ALERT MESSAGE
• Using a manometer, ensure that gas supply pressure is above minimum requirement listed on heater's data plate and does not drop more than 1.5" W.C. when unit fires. • Ensure wire connections to gas valve are clean and tight. • Ensure wire connections to flame sensor are clean and tight. • Ensure wire connections to spark igniter are clean and tight. • Inspect flame sensor, clean/replace as needed. • Inspect spark igniter, realign igniter gap as needed • Ensure adequate electrical ground to heater.	Ignition Failure 0 days 0 hrs 0 mins ago Error Code: B2-70 Flame not detected. Clean flame rod. Check gas supply. Press the Advanced button for more information BACK ADVANCED
• Confirm supply gas is turned on. • Using a manometer, ensure the supply gas pressure is above minimum pressure requirement listed on heater's data plate before and during operation. • Ensure wire connections to gas pressure switch are clean and tight. • If all above conditions are met, replace gas pressure switch.	Low Gas Pressure 0 days 0 hrs 0 mins ago Error Code: A6-501 Low Gas Pressure Press the Advanced button for more information BACK ADVANCED
• If Blocked Exhaust error occurs when blower is running, check for restrictions in exhaust pipe, including exhaust elbow, condensate drain, and outside termination. Also check exhaust pipe installation (size/length) per manual. • If Blocked Exhaust error occurs before blower runs, make sure pressure switch connections are clean and tight. Check pressure switch continuity/resistance. Switch should be closed (continuity/0 ohms). Replace switch if open (no continuity). • Other possible causes: high wind conditions and excessive negative air pressure in building.	Blocked Air Intake 0 days 0 hrs 0 mins ago Error Code: A7-1201 Restriction in air intake. Check intake pipe and termination for blockage. Press the Advanced button for BACK ADVANCED

FAULT AND ALERT MESSAGES (CONT)

Call the technical support phone number listed on the back cover for further technical assistance or to locate a qualified service agent in your area.

POSSIBLE CAUSES - CHECK/REPAIR	DISPLAYED FAULT/ALERT MESSAGE
• If Blocked Intake error occurs before blower runs, make sure pressure switch connections are clean and tight. Check pressure switch continuity/resistance. Switch should be closed (continuity/0 ohms). Replace switch if open (no continuity). • If Blocked Intake error occurs when blower is running, check for restrictions in intake pipe, including intake air connection, outside termination, and inlet condensate drains (if installed). • Other possible causes: High wind conditions, excessive negative air pressure in building.	Blocked Air Intake 0 days 0 hrs 0 mins ago Error Code: A7-1201 Restriction in air intake. Check intake pipe and termination for blockage. Press the Advanced button for BACK ADVANCED
• Ensure wire connections to upper temperature probe are clean and tight. • Using a thermometer, check the water temperature of the heater. • Use a multi-meter and check for continuity between the two red wires of the upper temperature probe. • If the two red wires are open (no continuity) and water temperature is below 160°F, replace upper temperature probe. • If the water temperature exceeds 195°F, turn off electric power and gas supply and call Tech Support for further instructions.	High Temp Limit Exceeded 0 days 0 hrs 0 mins ago Error Code: A5-401 Energy Cut Off has shut off water heater due to high tank temperature. Press the Advanced button for BACK ADVANCED
• Confirm the water heater is full of water. • Confirm the powered anode wire connections are tight and free of debris or moisture (i.e. rust, solder, metal pipe shavings). • Confirm proper electrical ground to the water heater. • Inspect powered anode(s), clean/replace as needed.	No Water 0 days 0 hrs 0 mins ago Error Code: D6-8 No water detected by Powered Anode. The control indicates a problem with the anode protection. By ACCEPT BACK ADVANCED

MAINTENANCE

GENERAL

Keep water heater area clear and free from combustible materials, gasoline, and other flammable vapors and liquids. See Locating The Water Heater on page 11.

Water heater maintenance includes periodic tank flushing and cleaning, and removal of lime scale. The water heater should be inspected and adjusted to maintain proper combustion. See Initial Start Up on page 53. A periodic inspection of the venting system should be made, see Table 17. Where used, water circulating pump(s) should be oiled according to the pump manufacturers recommendations.

PRECAUTIONS

⚠ CAUTION

Do not operate the water heater if it has been exposed to or exhibits the following:

- Exposed to flooding or water damage
- External damage.
- Firing without water.
- Sooting.

Do not operate the water heater until all corrective steps have been made by a qualified service technician.

Never operate the water heater without first being certain it is filled with water and a properly sized and rated Temperature-Pressure Relief Valve is installed in the relief valve opening on the water heater. See Temperature-Pressure Relief Valve on page 15.

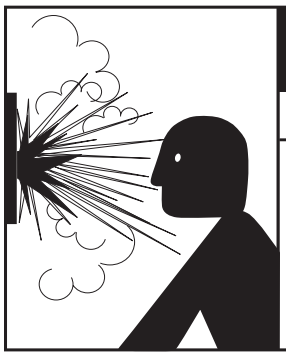

⚠ WARNING

Explosion Hazard

- Overheated water can cause water tank explosion.
- Properly sized temperature and pressure relief valve must be installed in the opening provided.

Should overheating occur or the gas supply fail to shut off, turn off the Main Gas Shutoff valve. See Figure 54 on page 40.

MAINTENANCE SCHEDULE

TABLE 17

COMPONENT	OPERATION	INTERVAL	REQUIRED
Tank	Sediment Removal	Semi Annually	Flushing
Tank	Lime Scale Removal	Semi Annually	UN-LIME®
Anode Rods	Inspection Cleaning	Annually	Clean Scale Deposits
T&P Valve	Test Operation	Semi Annually	Test
Vent System	Inspection	Annually	Termination Screens Clean Reseal/Repair

DRAINING AND FLUSHING

It is recommended that the water heater storage tank be drained and flushed every 6 months to reduce sediment buildup. The water heater should be drained if being shut down during freezing temperatures. See Features And Components on page 7 for the location of the water heater components described below.

⚠ DANGER

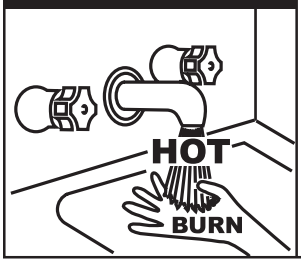

- Burn hazard.
- Hot water discharge.
- Keep hands clear of drain valve discharge.

To drain the water heater storage tank:

1. Turn off the electrical supply to the water heater.
2. Turn off the gas supply at the Main Gas Shutoff Valve if the water heater is going to be shut down for an extended period.
3. Ensure the cold water inlet valve is open.
4. Open a nearby hot water faucet and let the water run until the water is no longer hot.
5. Connect a hose to the water heater drain valve and terminate it to an adequate drain.
6. Close the cold water inlet valve.
7. Open the water heater drain valve and allow all the water to drain from the storage tank.
8. Close the water heater drain valve when all water in the storage tank has drained.
9. Close the hot water faucet opened in Step 4.
10. If the water heater is going to be shut down for an extended period, the drain valve should be left open.

To Flush the tank perform the following steps:

1. Turn off the electrical supply to the water heater.
2. Ensure the cold water inlet valve is open.
3. Open a nearby hot water faucet and let the water run until the water is no longer hot. Then close the hot water faucet.
4. Connect a hose to the drain valve and terminate it to an adequate drain.

5. Ensure the drain hose is secured before and during the entire flushing procedure. Flushing is performed with system water pressure applied to the water heater.
6. Open the water heater drain valve to flush the storage tank.
7. Flush the water heater storage tank to remove sediment and allow the water to flow until it runs clean.
8. Close the water heater drain valve when flushing is completed.
9. Remove the drain hose.
10. Fill the water heater - see Filling The Water Heater on page 53.
11. Turn on the electrical supply to place the water heater back in operation.
12. Allow the water heater to complete several heating cycles to ensure it is operating properly.

FILLING THE WATER HEATER

See Filling The Water Heater on page 53.

SEDIMENT REMOVAL

Waterborne impurities consist of the particles of soil and sand which settle out and form a layer of sediment on the bottom of the tank.

For convenience, sediment removal and lime scale removal should be performed at the same time.

LIME SCALE REMOVAL

When water is heated dissolved minerals in the water such as calcium and magnesium carbonate (lime scale) become less soluble. As the water temperature rises these minerals will precipitate or “fall out” of solution.

The amount of lime scale released from water is in direct proportion to water temperature and usage. The higher the water temperature or water usage, the more lime deposits are dropped out of the water.

Water hardness also affects lime scale accumulation. With the temperature and usage being the same, hard water will release more lime scale than softer water.

Lime scale reduces heating efficiency as it accumulates inside a water heater. Heating transfer surfaces become coated with lime scale deposits which increases fuel costs to operate the water heater. Lime scale deposits can also cause rumbling and pounding noises as air molecules trapped in the lime scale escape when heated. Lime scale accumulation also reduces the life span of water heaters. For these reasons a regular schedule for deliming should be set up.

The depth of lime accumulation in the bottom of the water heater should be measured periodically. Inspect by removing the cleanout cover once every 6 months at first. Deliming maintenance should then be performed based on the time it takes for 1 inch (2.5 cm) of lime to accumulate in the bottom of the water heater.

Sediment and lime scale removal may be accomplished manually through the cleanout opening furnished on the water heater, see Figure 64.

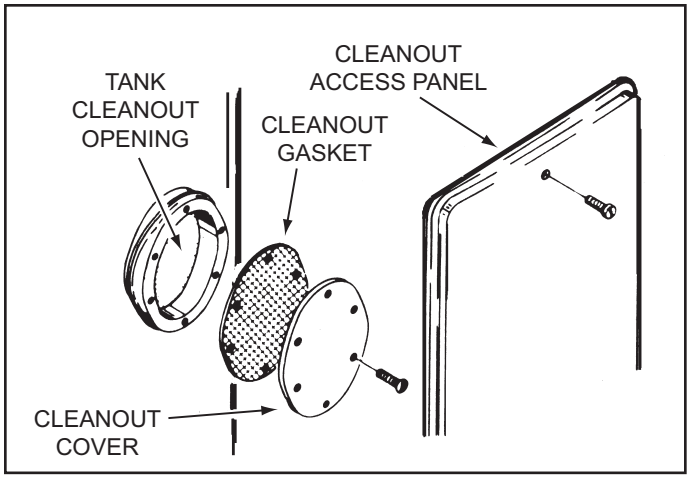

Figure 64

MANUAL LIME SCALE REMOVAL

NOTE: Contact your local distributor or call the parts department phone number on the back cover of this manual to order a new cleanout gasket. Have the new gasket available before removing the cleanout cover.

The cleanout opening is shown in Figure 64. To remove lime scale manually through the cleanout opening proceed as follows:

1. Turn off the electrical supply to the water heater.
2. The water heater must be drained, see Draining And Flushing on page 63, follow the instructions on how to drain the water heater.
3. Remove outer cleanout access panel from lower side of the water heater jacket.
4. Remove the cleanout cover from cleanout opening.
5. Remove lime, scale and/or sediment using care not to damage the glass-lining.
6. Install a new cleanout gasket if required.
7. Reinstall the cleanout cover. Be sure to draw plate up tight by tightening screws securely.
8. Close the water heater drain valve.
9. Fill the water heater - see Filling The Water Heater on page 53.
10. Turn on the electrical supply to place the water heater back in operation. See Initial Start Up on page 53.
11. Allow the water heater to complete several heating cycles to ensure it is operating properly.
12. Check for water leakage.
13. Reinstall the cleanout access panel.

CHEMICAL LIME SCALE REMOVAL

To dissolve and remove more stubborn lime scale deposits, UN-LIME® Professional Delimer should be used.

UN-LIME® Professional Delimer is an easy to handle patented food grade acid formulated specifically for lime scale removal from all types of water using equipment. Hydrochloric base acids must not be used to delime the water heaters covered in this manual.

Follow the instructions on the UN-LIME® to delime the water heater.

NOTE: Call the parts department phone number on the back cover of this manual to order UN-LIME® Professional Delimer. See Table 18 on page 65 for part numbers.

TABLE 18

UN-LIME® PROFESSIONAL DELIMER	
Part Number	**Description**
9005416105	4 - 1 gallon (case)
9005417105	1 - 5 gallon

POWERED ANODE RODS

To insure a long, trouble-free operating life, the water heaters covered in this manual are factory equipped with a powered anode system. The anode rod(s) are of a permanent design and do not need replacing unless damaged. Inspection and cleaning should be performed once a year.

NOTE: Follow the instructions to drain the water heater storage tank on page 63 first. Remove the powered anodes from the water heater by loosening the 3/4" NPT bushing that forms the top of the anodes. Do not disassemble the retaining nut and wire terminal from the top while installed in the water heater, the anode's electrode may fall inside the tank. Remove the entire anode rod from the water heater prior to inspection. Clean the anode rods with a soft cloth and reinstall. Follow the instructions for filling the water heater on page 53 when finished.

DRAIN VALVE AND ACCESS PANELS

The water heaters covered in this manual are equipped with a drain valve, see Features And Components on page 7 for location. The water heaters covered in this manual are also equipped with a cleanout opening for sediment and lime scale removal. See Figure 64 on page 64.

TEMPERATURE-PRESSURE RELIEF VALVE TEST

⚠ DANGER

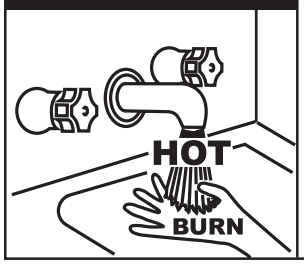

- Burn hazard.
- Hot water discharge.
- Keep clear of Temperature-Pressure Relief Valve discharge outlet.

It is recommended that the Temperature-Pressure Relief Valve should be checked to ensure that it is in operating condition every 6 months.

When checking the Temperature-Pressure Relief Valve operation, make sure that (1) no one is in front of or around the outlet of the Temperature-Pressure Relief Valve discharge line, and (2) that the water discharge will not cause any property damage, as the water may be extremely hot. Use care when operating valve as the valve may be hot.

To check the relief valve, lift the lever at the end of the valve several times, see Figure 65. The valve should seat properly and operate freely.

If after manually operating the valve, it fails to completely reset and continues to release water, immediately close the cold water inlet to the water heater and drain the water heater, see Draining And Flushing on page 63. Replace the Temperature-Pressure Relief Valve with a properly rated/sized new one, see Temperature-Pressure Relief Valve on page 15 for instructions on replacement.

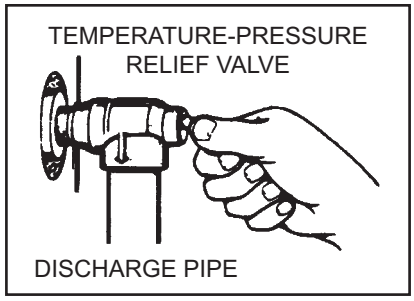

Figure 65

If the Temperature-Pressure Relief Valve on the water heater weeps or discharges periodically, this may be due to thermal expansion.

NOTE: Excessive water pressure is the most common cause of Temperature-Pressure Relief Valve leakage. Excessive water system pressure is most often caused by "thermal expansion" in a "closed system." See Thermal Expansion and Closed Water Systems on page 14. The Temperature-Pressure Relief Valve is not intended for the constant relief of thermal expansion.

Temperature-Pressure Relief Valve leakage due to pressure build up in a closed system that does not have a thermal expansion tank installed is not covered under the limited warranty. Thermal expansion tanks must be installed on all closed water systems.

DO NOT PLUG THE TEMPERATURE-PRESSURE RELIEF VALVE OPENING. THIS CAN CAUSE PROPERTY DAMAGE, SERIOUS INJURY OR DEATH.

⚠ WARNING

Explosion Hazard

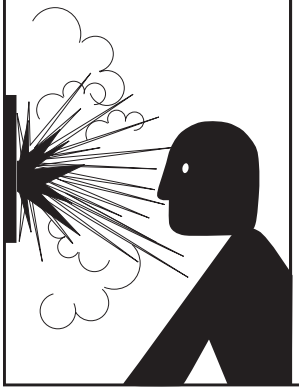

- Temperature-Pressure Relief Valve must comply with ANSI Z21.22-CSA 4.4 and ASME code.
- Properly sized temperature-pressure relief valve must be installed in opening provided.
- Can result in overheating and excessive tank pressure.
- Can cause serious injury or death.

VENT SYSTEM

Examine the vent system every 6 months. Points of inspection are as follows:

1. Check for obstructions and/or deterioration of the intake air and/or vent piping and the intake air and vent terminations. Replace immediately where needed.
2. The debris screens in the intake air and vent terminations should be should be cleaned of foreign material and soot. See Figure 25 on page 27.

   NOTE: Do not reach inside the vent termination when the heater is in operation.
3. Check all vent system connections for leakage and repair or reseal as necessary.
4. Inspect and clean the built-in condensate trap of any debris. See Figure 8 on page 16 and Figure 53 on page 39.

CCB - CENTRAL CONTROL BOARD LAYOUT

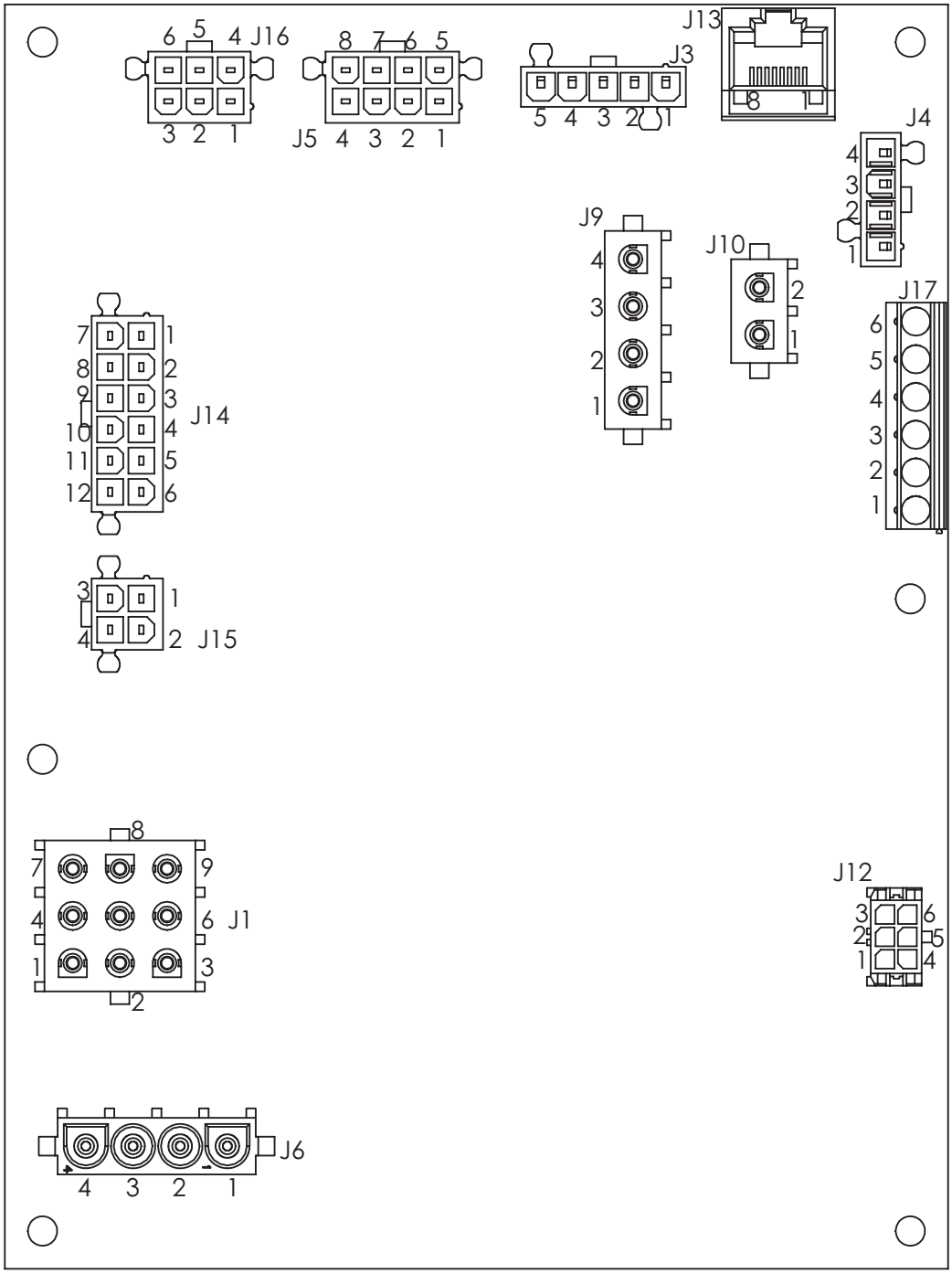

Figure 66

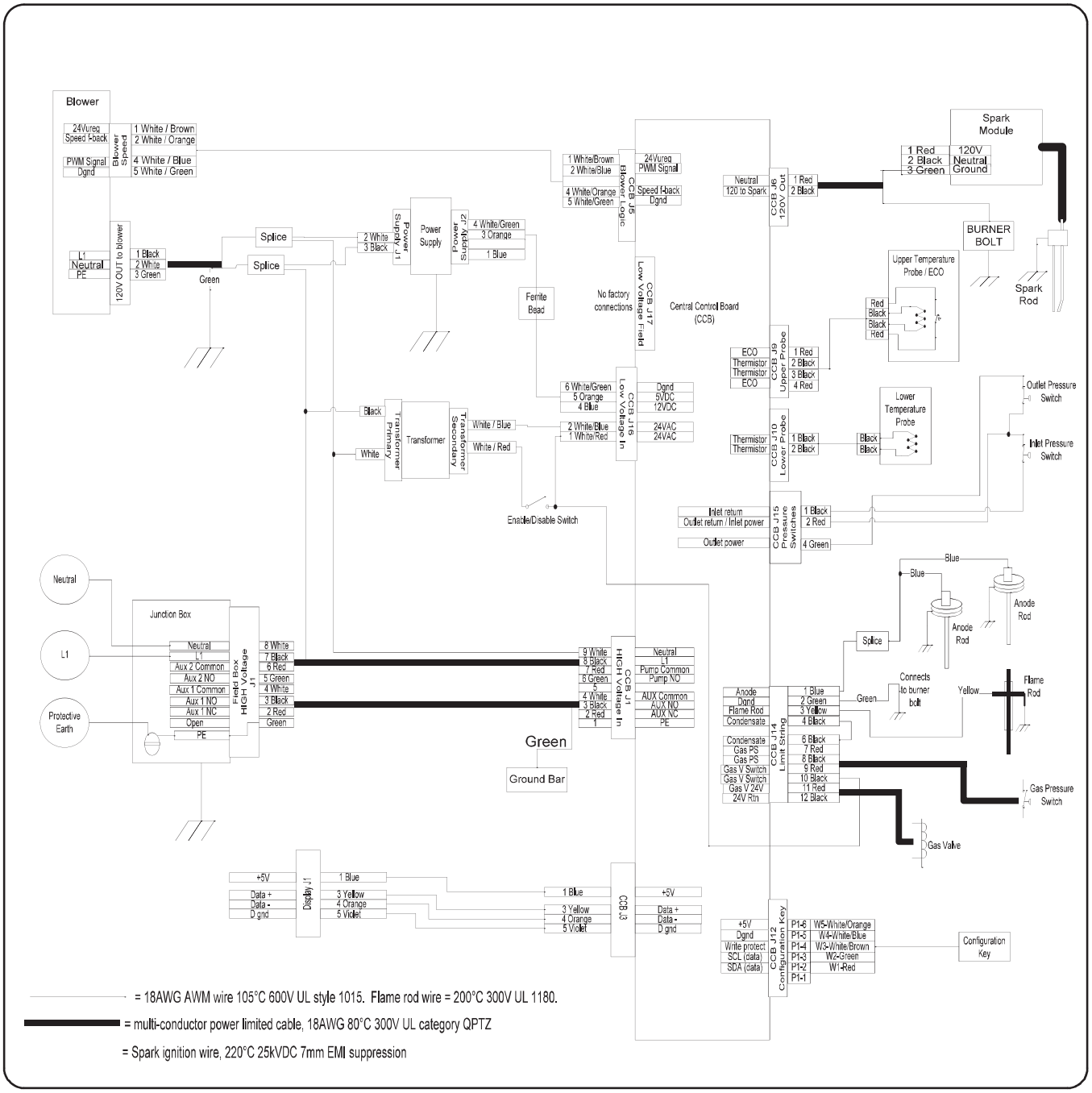
Blower
24Vreg
Speed f-back
PWM Signal
Dgnd
Blower Speed
1 White / Brown
2 White / Orange
4 White / Blue
5 White / Green
L1
Neutral
PE
120V OUT to blower
1 Black
2 White
3 Green
Green
Splice
Splice
2 White
3 Black
Power Supply J1
Power Supply
Power Supply J2
4 White/Green
3 Orange
1 Blue
Ferrite Bead
1 White/Brown
2 White/Blue
4 White/Orange
5 White/Green
Blower Logic
CCB J5
24Vreg
PWM Signal
Speed f-back
Dgnd
No factory connections
Low Voltage Field
CCB J17
Central Control Board (CCB)
Neutral
120 to Spark
CCB J6
120V Out
1 Red
2 Black
Spark Module
1 Red
2 Black
3 Green
120V
Neutral
Ground
BURNER BOLT
Spark Rod
Upper Temperature Probe / ECO
Red
Black
Black
Red
ECO
Thermistor
Thermistor
ECO
CCB J9
Upper Probe
1 Red
2 Black
3 Black
4 Red
6 White/Green
5 Orange
4 Blue
Low Voltage In
CCB J16
Dgnd
5VDC
12VDC
2 White/Blue
1 White/Red
24VAC
24VAC
Black
White
Transformer Primary
Transformer
Transformer Secondary
White / Blue
White / Red
Enable/Disable Switch
Thermistor
Thermistor
CCB J10
Lower Probe
1 Black
2 Black
Lower Temperature Probe
Black
Black
Outlet Pressure Switch
Inlet Pressure Switch
Inlet return
Outlet return / Inlet power
Outlet power
CCB J15
Pressure Switches
1 Black
2 Red
4 Green
Neutral
L1
Protective Earth
Junction Box
Neutral
L1
Aux 2 Common
Aux 2 NO
Aux 1 Common
Aux 1 NO
Aux 1 NC
Open
PE
Field Box
HIGH Voltage
J1
8 White
7 Black
6 Red
5 Green
4 White
3 Black
2 Red
Green
9 White
8 Black
7 Red
6 Green
5
4 White
3 Black
2 Red
1
HIGH Voltage In
CCB J1
Neutral
L1
Pump Common
Pump NO
AUX Common
AUX NO
AUX NC
PE
Green
Ground Bar
Blue
Blue
Anode Rod
Anode Rod
Splice
Connects to burner bolt
Green
Yellow
Flame Rod
Anode
Dgnd
Flame Rod
Condensate
CCB J14
Limit String
1 Blue
2 Green
3 Yellow
4 Black
Condensate
Gas PS
Gas PS
Gas V Switch
Gas V Switch
Gas V 24V
24V Rtn
6 Black
7 Red
8 Black
9 Red
10 Black
11 Red
12 Black
Gas Pressure Switch
Gas Valve
+5V
Data +
Data -
D gnd
Display J1
1 Blue
3 Yellow
4 Orange
5 Violet
1 Blue
3 Yellow
4 Orange
5 Violet
CCB J3
+5V
Data +
Data -
D gnd
+5V
Dgnd
Write protect
SCL (data)
SDA (data)
CCB J12
Configuration Key
P1-6
P1-5
P1-4
P1-3
P1-2
P1-1
W5-White/Orange
W4-White/Blue
W3-White/Brown
W2-Green
W1-Red
Configuration Key
= 18AWG AWM wire 105°C 600V UL style 1015. Flame rod wire = 200°C 300V UL 1180.
= multi-conductor power limited cable, 18AWG 80°C 300V UL category QPTZ
= Spark ignition wire, 220°C 25kVDC 7mm EMI suppression

Figure 67

CIRCULATING PUMP WIRING DIAGRAM
STORAGE TANK OR BUILDING RECIRCULATION

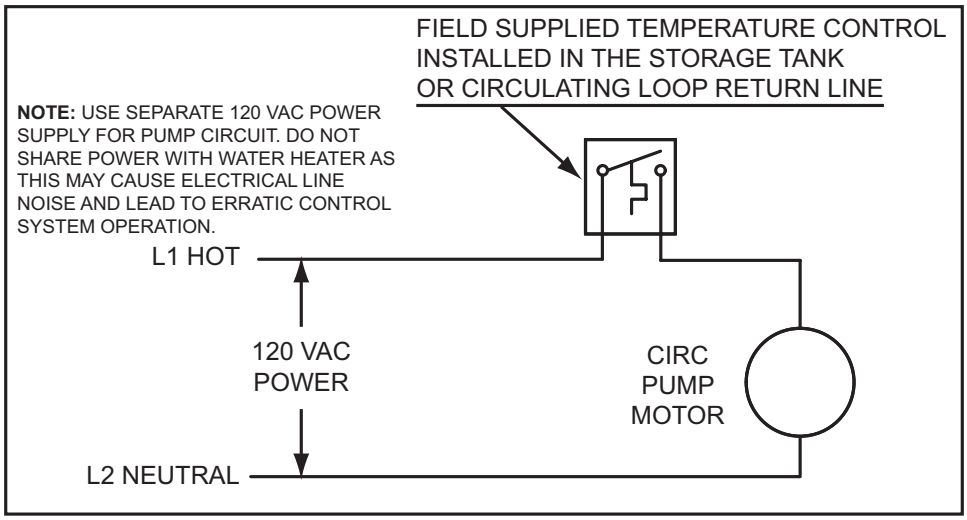

Figure 68

CIRCULATING PUMP WIRING DIAGRAM
DISHWASHER LOOP WITH TOGGLE SWITCH

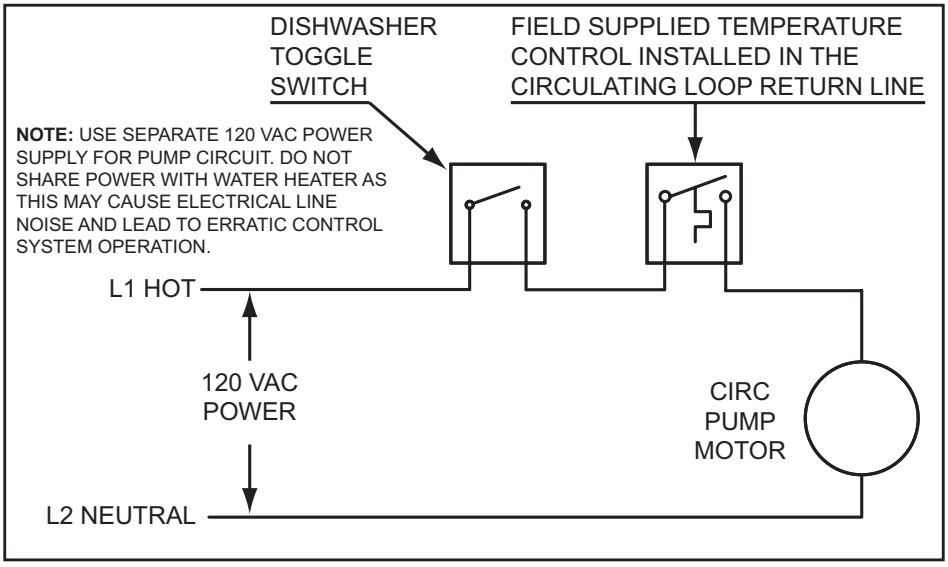

Figure 69

WATER PIPING DIAGRAMS

Before installation of water piping review the following:

1. See Mixing Valves on page 14.
2. See Dishwashing Machines on page 14.
3. See Temperature-Pressure Relief Valve on page 15.
4. See Closed Systems and Thermal Expansion on page 14.
5. See Water Line Connections on page 43.
6. If a pump is being installed between a water heater and storage tank or on a building recirculation loop wire according to Figure 68 on page 68.
7. If a pump is being installed in a recirculation loop between the water heater and a commercial dishwasher wire according to Figure 68 or Figure 69 on page 68.

ONE WATER HEATER, SINGLE TEMPERATURE WITH BUILDING RECIRCULATION

WARNING: THIS DRAWING SHOWS SUGGESTED PIPING CONFIGURATION AND OTHER DEVICES; CHECK WITH LOCAL CODES AND ORDINANCES FOR ADDITIONAL REQUIREMENTS.

ANY MATERIAL, COMPONENT OR VENDOR CHANGE MUST HAVE PRIOR APPROVAL BY THE APPLICABLE PRODUCT ENGINEERING DEPARTMENT.

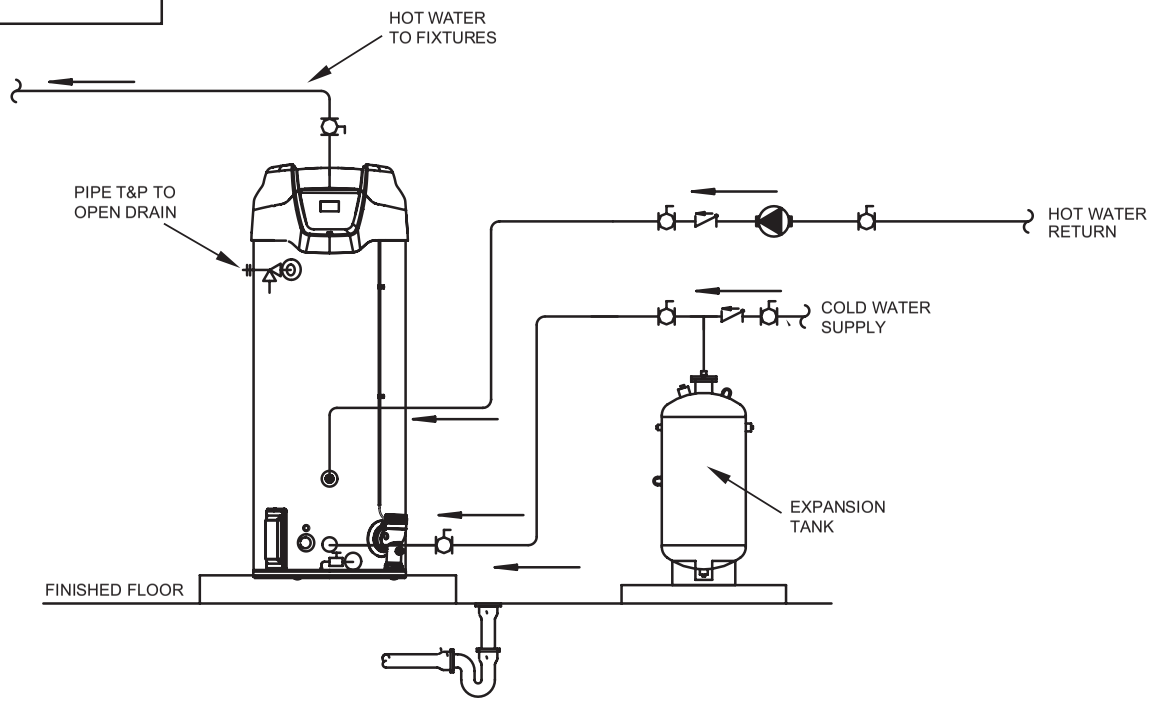

LEGEND

- TEMPERATURE & PRESSURE RELIEF VALVE
- TEMPERATURE CONTROL PROBE
- CHECK VALVE
- PRESSURE RELIEF VALVE
- DRAIN
- TEMPERATURE GAGE
- CIRCULATING PUMP
- FULL PORT BALL VALVE
- WATER FLOW SWITCH

NOTES:

1. Preferred piping method.
2. The temperature and pressure relief valve setting shall not exceed pressure rating of any component in the system.
3. Service valves are shown for servicing unit. However, local codes shall govern their usage.

WATER PIPING DIAGRAMS

Before installation of water piping review the following:

1. See Mixing Valves on page 14.
2. See Dishwashing Machines on page 14.
3. See Temperature-Pressure Relief Valve on page 15.
4. See Closed Systems and Thermal Expansion on page 14.
5. See Water Line Connections on page 43.
6. If a pump is being installed between a water heater and storage tank or on a building recirculation loop wire according to Figure 68 on page 68.
7. If a pump is being installed in a recirculation loop between the water heater and a commercial dishwasher wire according to Figure 68 or Figure 69 on page 68.

ONE WATER HEATER, TWO TEMPERATURE WITH HIGH TEMPERAURE LOOP RECIRCULATION WITH BUILDING RECIRCULATION

WARNING: THIS DRAWING SHOWS SUGGESTED PIPING CONFIGURATION AND OTHER DEVICES; CHECK WITH LOCAL CODES AND ORDINANCES FOR ADDITIONAL REQUIREMENTS.

ANY MATERIAL, COMPONENT OR VENDOR CHANGE MUST HAVE PRIOR APPROVAL BY THE APPLICABLE PRODUCT ENGINEERING DEPARTMENT.

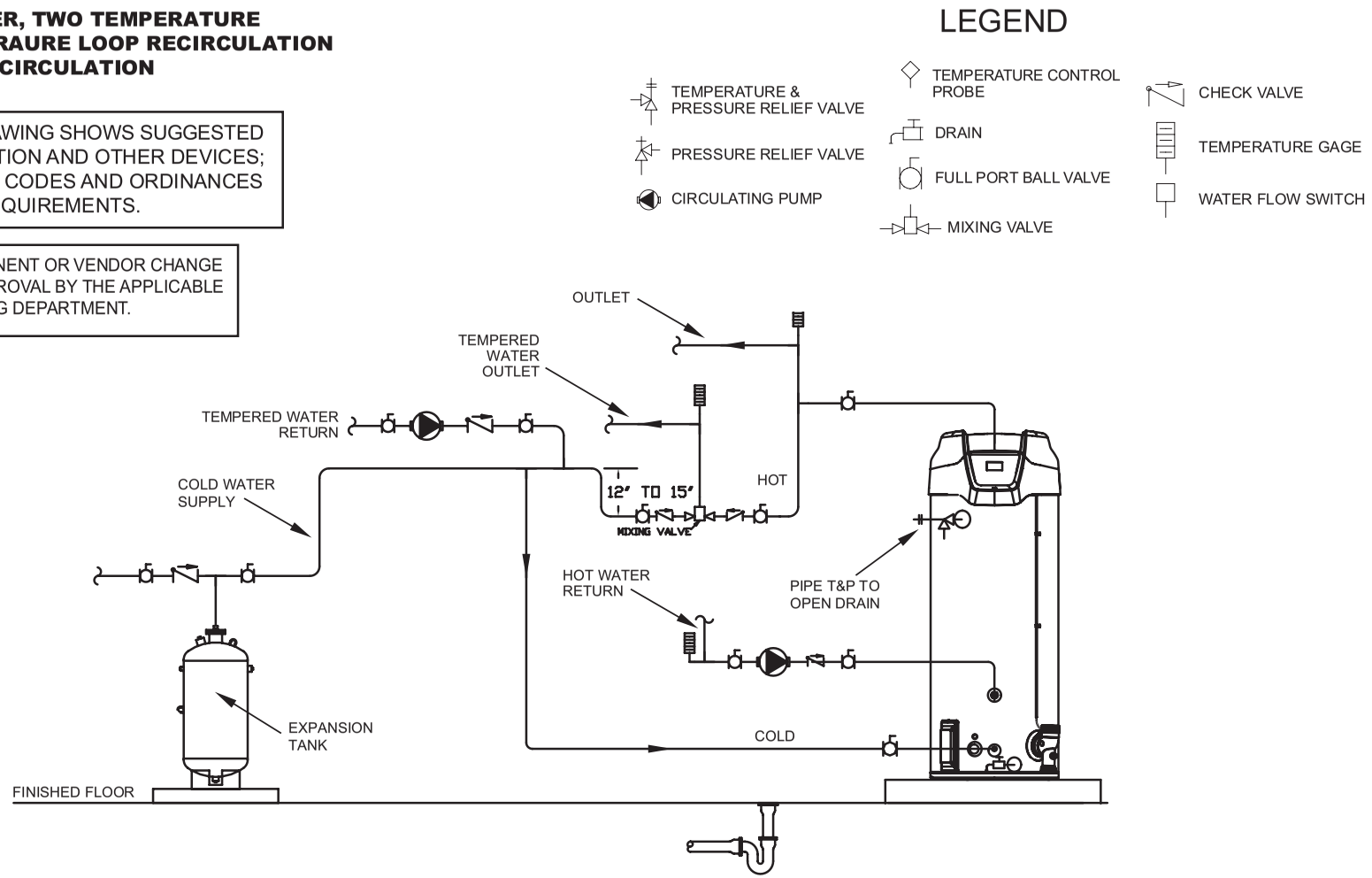

NOTES:

1. Preferred piping method.
2. The temperature and pressure relief valve setting shall not exceed pressure rating of any component in the system.
3. Service valves are shown for servicing unit. However, local codes shall govern their usage.

WATER PIPING DIAGRAMS

Before installation of water piping review the following:

1. See Mixing Valves on page 14.
2. See Dishwashing Machines on page 14.
3. See Temperature-Pressure Relief Valve on page 15.
4. See Closed Systems and Thermal Expansion on page 14.
5. See Water Line Connections on page 43.
6. If a pump is being installed between a water heater and storage tank or on a building recirculation loop wire according to Figure 68 on page 68.
7. If a pump is being installed in a recirculation loop between the water heater and a commercial dishwasher wire according to Figure 68 or Figure 69 on page 68.

ONE WATER HEATER, SINGLE TEMPERATURE WITH VERTICAL STORAGE TANK FORCED RECIRCULATION WITH BUILDING RECIRCULATION

WARNING: THIS DRAWING SHOWS SUGGESTED PIPING CONFIGURATION AND OTHER DEVICES; CHECK WITH LOCAL CODES AND ORDINANCES FOR ADDITIONAL REQUIREMENTS.

ANY MATERIAL, COMPONENT OR VENDOR CHANGE MUST HAVE PRIOR APPROVAL BY THE APPLICABLE PRODUCT ENGINEERING DEPARTMENT.

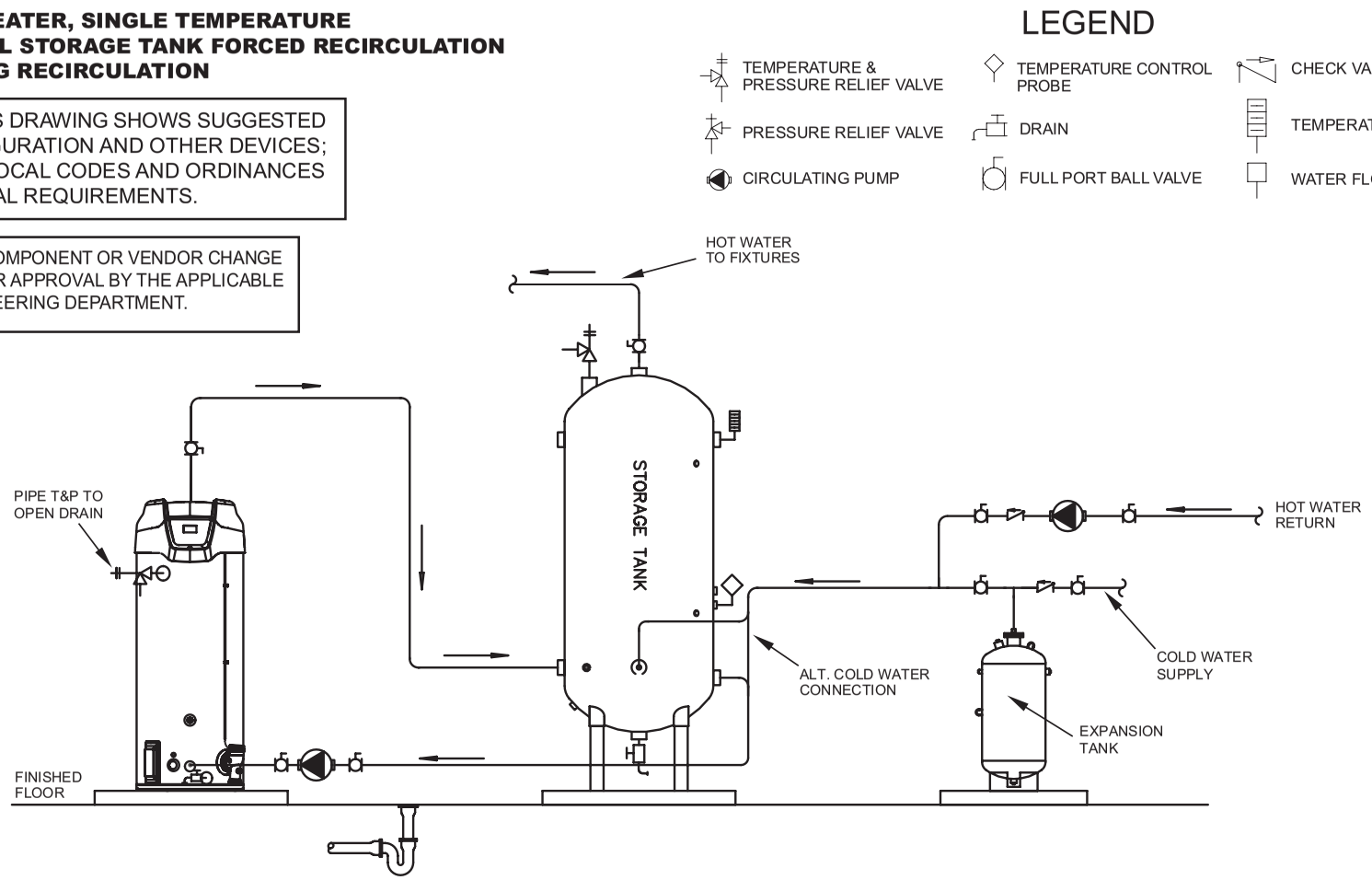

NOTES:

1. Preferred piping method.
2. The temperature and pressure relief valve setting shall not exceed pressure rating of any component in the system.
3. Service valves are shown for servicing unit. However, local codes shall govern their usage.
4. The tank temperature control should be wired to and control the pump between the water heater(s) and the storage tank(s).
5. The water heater's operating thermostat should be set 5 degrees F higher than the tank temperature control.

WATER PIPING DIAGRAMS

Before installation of water piping review the following:

1. See Mixing Valves on page 14.
2. See Dishwashing Machines on page 14.
3. See Temperature-Pressure Relief Valve on page 15.
4. See Closed Systems and Thermal Expansion on page 14.
5. See Water Line Connections on page 43.
6. If a pump is being installed between a water heater and storage tank or on a building recirculation loop wire according to Figure 68 on page 68.
7. If a pump is being installed in a recirculation loop between the water heater and a commercial dishwasher wire according to Figure 68 or Figure 69 on page 68.

ONE WATER HEATER, SINGLE TEMPERATURE WITH HORIZONTAL STORAGE TANK FORCED RECIRCULATION WITH BUILDING RECIRCULATION

WARNING: THIS DRAWING SHOWS SUGGESTED PIPING CONFIGURATION AND OTHER DEVICES; CHECK WITH LOCAL CODES AND ORDINANCES FOR ADDITIONAL REQUIREMENTS.

ANY MATERIAL, COMPONENT OR VENDOR CHANGE MUST HAVE PRIOR APPROVAL BY THE APPLICABLE PRODUCT ENGINEERING DEPARTMENT.

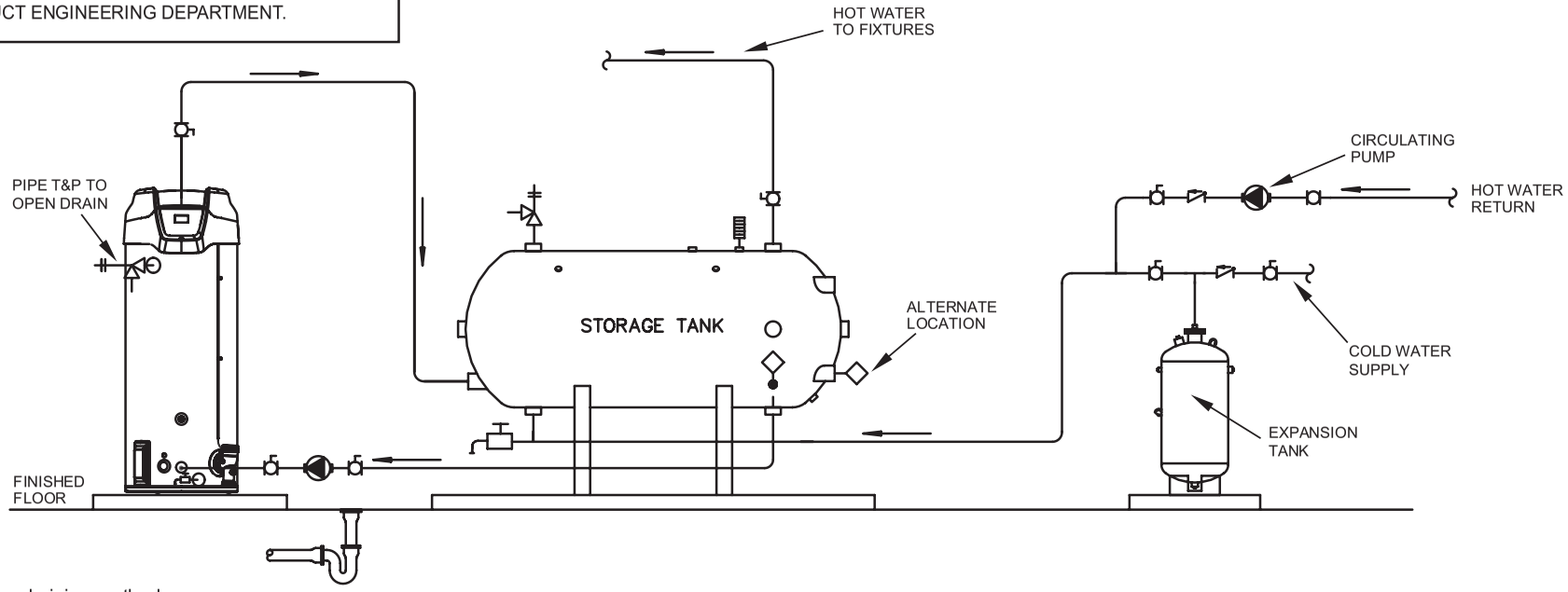

NOTES:

1. Preferred piping method.
2. The temperature and pressure relief valve setting shall not exceed pressure rating of any component in the system.
3. Service valves are shown for servicing unit. However, local codes shall govern their usage.
4. The tank temperature control should be wired to and control the pump between the water heater(s) and the storage tank(s).
5. The water heater's operating thermostat should be set 5 degrees F higher than the tank temperature control.

WATER PIPING DIAGRAMS

Before installation of water piping review the following:

1. See Mixing Valves on page 14.
2. See Dishwashing Machines on page 14.
3. See Temperature-Pressure Relief Valve on page 15.
4. See Closed Systems and Thermal Expansion on page 14.
5. See Water Line Connections on page 43.
6. If a pump is being installed between a water heater and storage tank or on a building recirculation loop wire according to Figure 68 on page 68.
7. If a pump is being installed in a recirculation loop between the water heater and a commercial dishwasher wire according to Figure 68 or Figure 69 on page 68.

TWO WATER HEATERS, SINGLE TEMPERATURE WITH BUILDING RECIRCULATION

WARNING: THIS DRAWING SHOWS SUGGESTED PIPING CONFIGURATION AND OTHER DEVICES; CHECK WITH LOCAL CODES AND ORDINANCES FOR ADDITIONAL REQUIREMENTS.

ANY MATERIAL, COMPONENT OR VENDOR CHANGE MUST HAVE PRIOR APPROVAL BY THE APPLICABLE PRODUCT ENGINEERING DEPARTMENT.

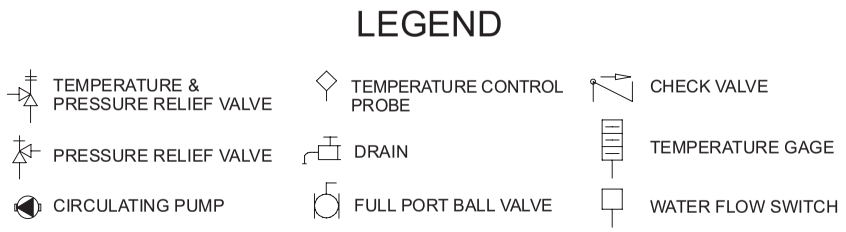

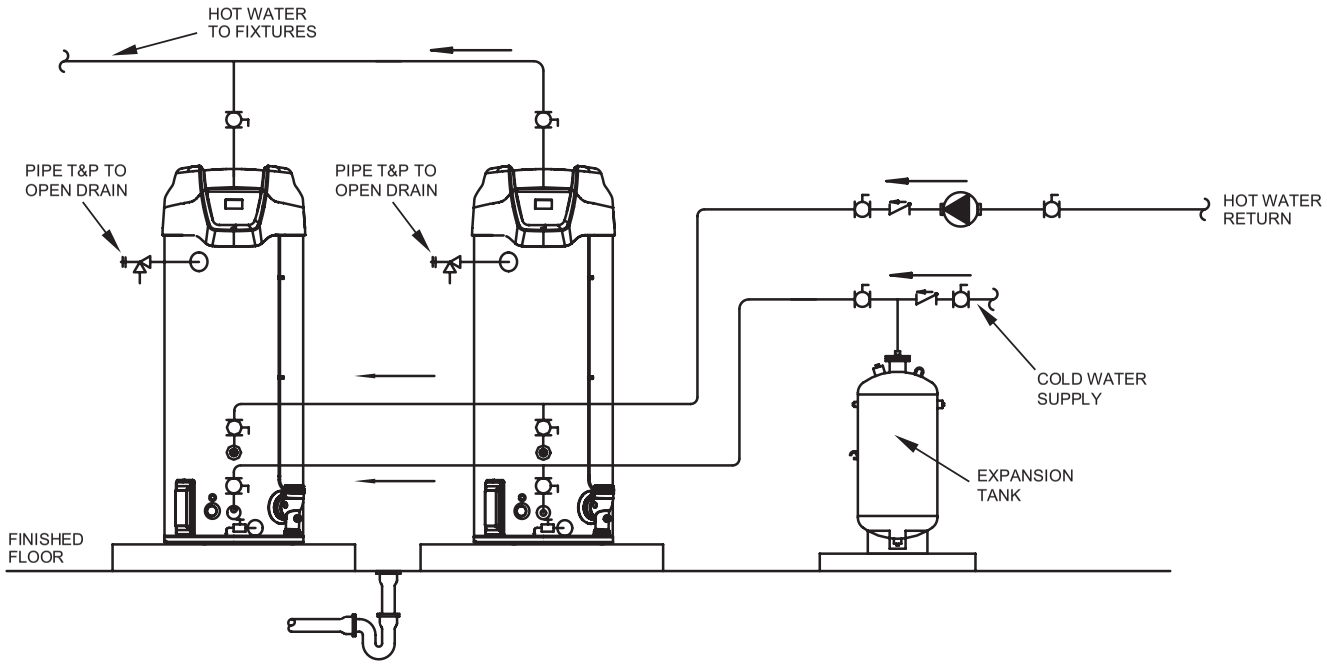

NOTES:

1. Preferred piping method.
2. The temperature and pressure relief valve setting shall not exceed pressure rating of any component in the system.
3. Service valves are shown for servicing unit. However, local codes shall govern their usage.

WATER PIPING DIAGRAMS

Before installation of water piping review the following:

1. See Mixing Valves on page 14.
2. See Dishwashing Machines on page 14.
3. See Temperature-Pressure Relief Valve on page 15.
4. See Closed Systems and Thermal Expansion on page 14.
5. See Water Line Connections on page 43.
6. If a pump is being installed between a water heater and storage tank or on a building recirculation loop wire according to Figure 68 on page 68.
7. If a pump is being installed in a recirculation loop between the water heater and a commercial dishwasher wire according to Figure 68 or Figure 69 on page 68.

THREE WATER HEATERS, SINGLE TEMPERATURE WITH BUILDING RECIRCULATION

WARNING: THIS DRAWING SHOWS SUGGESTED PIPING CONFIGURATION AND OTHER DEVICES; CHECK WITH LOCAL CODES AND ORDINANCES FOR ADDITIONAL REQUIREMENTS.

ANY MATERIAL, COMPONENT OR VENDOR CHANGE MUST HAVE PRIOR APPROVAL BY THE APPLICABLE PRODUCT ENGINEERING DEPARTMENT.

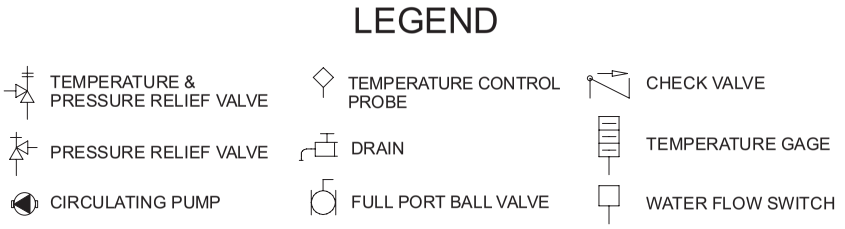

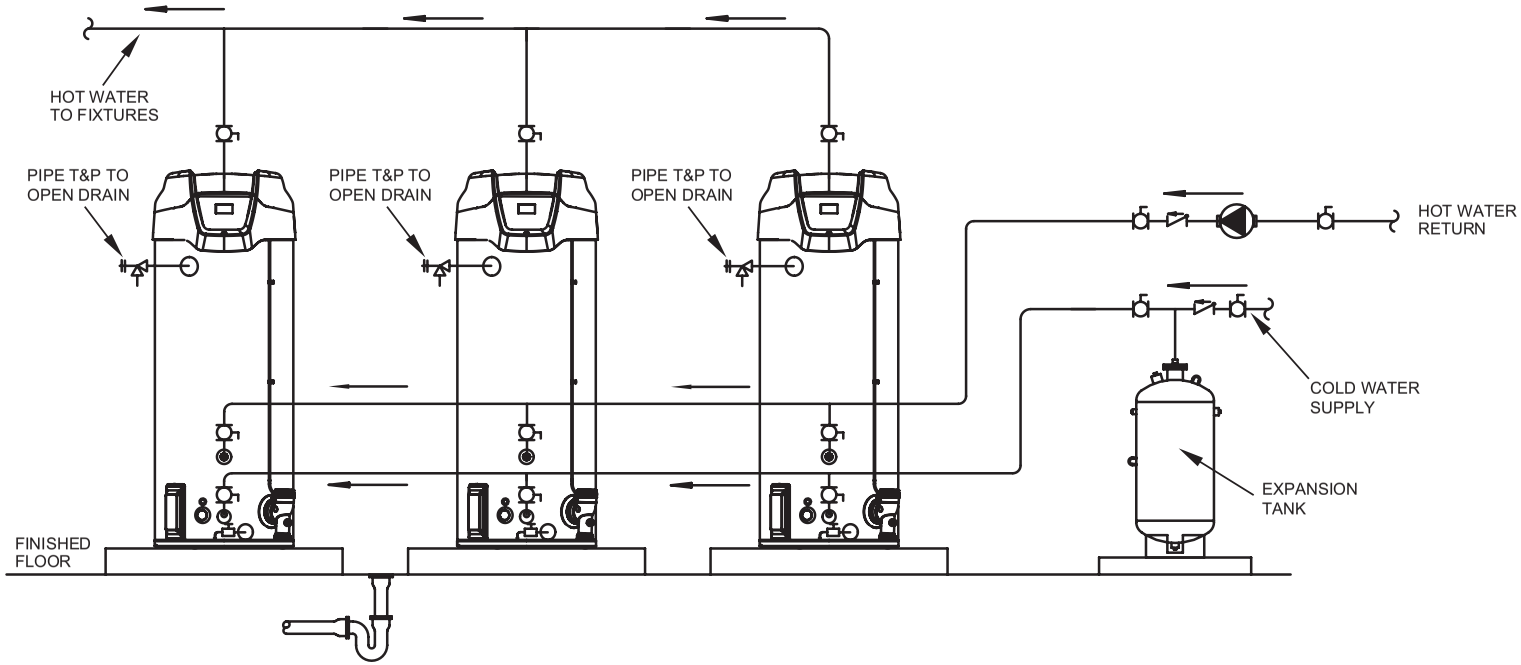

NOTES:

1. Preferred piping method.
2. The temperature and pressure relief valve setting shall not exceed pressure rating of any component in the system.
3. Service valves are shown for servicing unit. However, local codes shall govern their usage.

WATER PIPING DIAGRAMS

Before installation of water piping review the following:

1. See Mixing Valves on page 14.
2. See Dishwashing Machines on page 14.
3. See Temperature-Pressure Relief Valve on page 15.
4. See Closed Systems and Thermal Expansion on page 14.
5. See Water Line Connections on page 43.
6. If a pump is being installed between a water heater and storage tank or on a building recirculation loop wire according to Figure 68 on page 68.
7. If a pump is being installed in a recirculation loop between the water heater and a commercial dishwasher wire according to Figure 68 or Figure 69 on page 68.

FOUR WATER HEATERS, SINGLE TEMPERATURE WITH BUILDING RECIRCULATION

WARNING: THIS DRAWING SHOWS SUGGESTED PIPING CONFIGURATION AND OTHER DEVICES; CHECK WITH LOCAL CODES AND ORDINANCES FOR ADDITIONAL REQUIREMENTS.

ANY MATERIAL, COMPONENT OR VENDOR CHANGE MUST HAVE PRIOR APPROVAL BY THE APPLICABLE PRODUCT ENGINEERING DEPARTMENT.

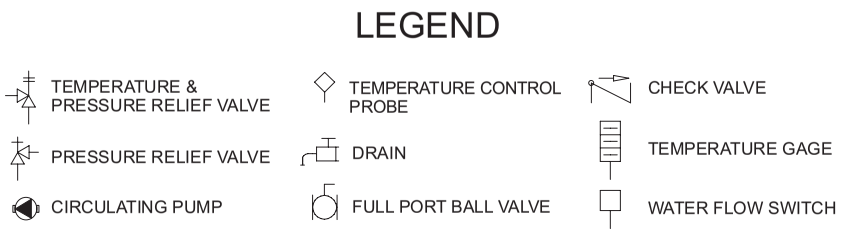

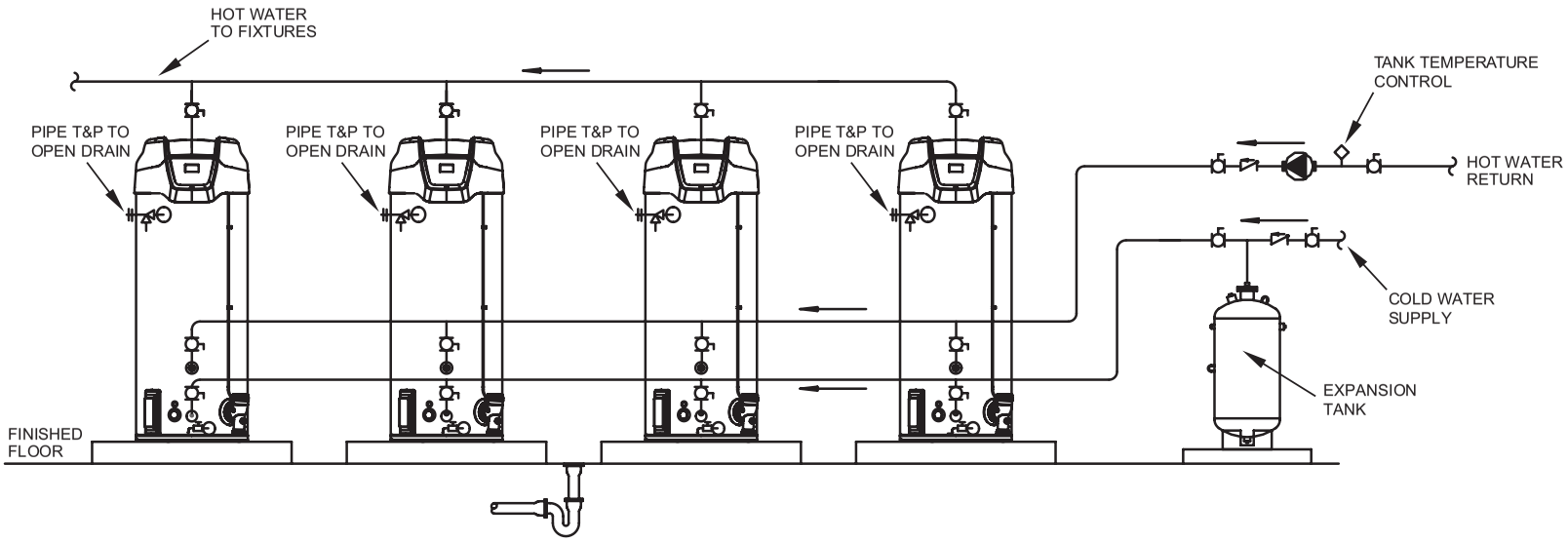

NOTES:

1. Preferred piping method.
2. The temperature and pressure relief valve setting shall not exceed pressure rating of any component in the system.
3. Service valves are shown for servicing unit. However, local codes shall govern their usage.

NOTES

NOTES

NOTES

COMMERCIAL WATER HEATER LIMITED WARRANTY

EFFECTIVE

For 3 Years, in the event of a tank leak, we will repair or, at our discretion, replace the defective water heater.

For 1 Year, in the event of part failure, we will repair or, at our discretion, replace the defective part.

We warrant this product against defects in materials or workmanship as described in this document if installed within the United States or Canada and provided the product remains at its original place of installation.

Warranty coverage begins the date of installation OR the date of manufacture if installation cannot be verified.

WHAT'S COVERED

Subject to these terms, in the event of defect in materials and/or workmanship resulting in a **tank leak** during the **first three years**, we will:

- Replace the water heater should the tank leak.

Subject to these terms, in the event of a defect in materials and/or workmanship appearing during the **first year**, we will:

- Repair or, at our discretion, replace any part of the water heater covered under this limited warranty excluding parts subject to normal maintenance (Example: non-electronic anode rod, filter, etc)

Service/labor, shipping, delivery, installation, handling or any other costs are not covered at any time under this warranty.

Any replacement part or product will be warranted only for the unexpired portion of the original water heater's limited warranty period.

If an identical model is no longer available due to a change in law, regulation, or standard, we will replace the product with one having comparable capacity and input. In these instances, the owner will have the option of paying the difference between what was paid for the original model and the new model with the additional features, or receiving a refund of the portion of the purchase price, on a pro-rata basis allocable to the unexpired portion of the warranty.

WHAT'S NOT COVERED

- Problems caused by improper: gas supply line sizing, gas type, venting, connections, combustion air, voltage, wiring, or fusing
- Failure to follow applicable codes
- Failure to follow printed instructions
- Abuse, misuse, accident, fire, flood, Acts of God
- Improper installation, sizing, delivery, or maintenance
- Claims related to rust, noise, smell, or taste of water
- Failure to conduct authorized factory start up if required
- Alterations to the water heater
- Non-outdoor heaters installed outdoors
- Damages due to a failure to allow for thermal expansion
- Heat exchanger failure due to lack of adequate / proper supply of water
- Heaters moved from their original location
- Service trips to explain proper installation, use, or maintenance of the product/unit or to describe compliance requirements under applicable codes and regulations
- Charges related to accessing your heater including but not limited to door/wall removal, equipment rental, etc.
- Replacement parts after expiration of this warranty

LIMITATIONS

NOTWITHSTANDING ANYTHING ELSE TO THE CONTRARY, THIS IS YOUR SOLE AND EXCLUSIVE WARRANTY. ALL OTHER WARRANTIES INCLUDING A WARRANTY OF MERCHANTABILITY OR FITNESS FOR PARTICULAR PURPOSE ARE EXPRESSLY DISCLAIMED. SELLER SHALL NOT BE LIABLE FOR ANY CONSEQUENTIAL, INCIDENTAL, SPECIAL, PUNITIVE OR OTHER INDIRECT DAMAGES. TOTAL LIABILITY ARISING AT ANY TIME SHALL NOT EXCEED THE PURCHASE PRICE PAID WHETHER BASED ON CONTRACT, TORT, STRICT LIABILITY OR ANY OTHER LEGAL THEORY.

SERVICE INQUIRIES:

For service inquiries call the telephone number listed below. Be prepared to provide the following information: name, address, and telephone number; the model and serial number of the water heater; proof of installation; and a clear description of the problem.

For your records, fill in the product:

Serial: _____
Model: _____

U.S. Customers:

State Water Heaters
500 Tennessee Waltz Parkway
Ashland City, Tennessee 37015
800-365-0024
www.statewaterheaters.com

500 Tennessee Waltz Parkway, Ashland City, TN 37015
Tech Support: 800-365-0024
Parts: 800-821-2017
www.statewaterheaters.com

Copyright © 2017 State Water Heaters, All rights reserved.