Commercial Gas
Water Heaters

MODULATING ULTRA FORCE™ HIGH EFFICIENCY POWER VENT

The full line of State Modulating Ultra Force High Efficiency Power Vent condensing water heaters has been designed to provide years of dependable service and feature industry leading technology. Models are available from 120,000 to 500,000 Btu/h and all deliver thermal efficiencies of 95% and higher. The unique helical coil heat exchanger limits weld joints for optimal service life while maximizing heat transfer.

Modulating Ultra Force High Efficiency Power Vent is an industry leader in high efficiency commercial water heating. The current modulating models adjust firing rate to the specific demand further increasing efficiency and money savings.

INTELLIGENT CONTROL SYSTEM WITH TOUCH SCREEN DISPLAY AND ICOMM CONNECTIVETY ONBOARD*

- Exclusive State designed touch display control system
- Provides detailed water heater status information
- Precise temperature control adjustable from 90 to 180 degrees
- Built-in diagnostics
- Run history information
- *Ultra Force models manufactured March 1, 2018 to present come standard with iCOMM Wi-Fi connectivety onboard. Remotely monitor and adjust the water heater via the State app. No charge connectivity using Wi-Fi or Ethernet connection.

SUBMERGED COMBUSTION CHAMBER, WITH HELICAL HEAT EXCHANGER COIL

- Positioned in center of tank, surrounded by water to virtually eliminate radiant heat loss from chamber
- Direct spark ignition
- Spiral heat exchanger keeps hot burner gases swirling, uses centrifugal force to maximize efficiency of heat transfer to water in tank
- Spiral heat exchanger reduces lime scale from forming on water-side surfaces, which maintains energy efficiency over time

POWERED ANODES STANDARD ON ALL MODELS

- Provides long-lasting tank protection in varying water conditions
- Powered anodes are non-sacrificial
- Automatically adjusts output needed to properly protect the tank

PERMAGLAS® ULTRA COAT™ GLASS LINING

- Glass coating is applied using a liquid slush coating technique to ensure uniform coating
- Heat exchanger coil is glassed both externally and internally for optimum protection

MECHANICAL VENTING VERSATILITY

- Conventional power venting or direct venting
- Vents vertically or through a sidewall
- Front located exhaust and condensate connections allow for easy install and access
- Vents with low cost PVC Schedule 40 intake and exhaust pipe. Approved for optional CPVC Schedule 40, Polypropylene and AL29-4C stainless steel vent materials
- Direct-vent intake and exhaust pipe can terminate separately outside building or through single opening, using concentric vent assembly
- Canadian installations require ULC S636 PVC/CPVC, ULC S636 Polypropylene and AL29-4C stainless steel pipe for intake and exhaust

HIGH EFFICIENCY MODULATING PRE-MIX POWERED BURNER

- Down-fired pre-mix burner provides optimum efficiency and quiet operation
- Top-mounted burner position prevents condensation from affecting burner operation

3-YEAR LIMITED TANK / 1-YEAR LIMITED PARTS WARRANTY

- For complete warranty information, consult written warranty or statewaterheaters.com.

SUF60-120NE(A) THROUGH SUF119-500NE(A)
MODEL SHOWN:
SUF100-199NE(A) SERIES 300/301

ASME HLW · ENERGY STAR · GAS-FIRED UL LISTED · CSA Low Lead Content · CLASSIFIED UL WATER QUALITY NSF/ANSI-5 · AHRI CERTIFIED www.ahridirectory.org · iCOMM · ASME (Optional)

SOLID. STATE.

© June 2018 State Water Heaters. All Rights Reserved

OTHER FEATURES:

SPACE-SAVING DESIGN FOR INSTALLATION FLEXIBILITY

- Easy-to-remove top cover for convenient access to serviceable parts
- 0″ installation clearances on sides and rear, 1-1/2″ installation clearance on top
- Handhole cleanout allows easy access to tank interior for cleaning
- 0″ clearance to combustibles, approved for installation on combustible floors

CODES AND STANDARDS

- CSA certified and ASME rated T&P relief valve
- Maximum hydrostatic working pressure: 160 psi
- All models are design certified by Underwriters Laboratories (UL), Inc., to ANSI Z21.10.3 - CSA 4.3 Standards
- Meets the thermal efficiency and standby loss requirements of the U.S. Department of Energy and current edition ASHRAE/IES 90.1
- Design Certified by Underwriters Laboratories to NSF standard 5 for 180°F (62°C) water
- Complies with SCAQMD Rule 1146.2 and other Air Quality Management Districts with similar requirements for ultra-low NOx emissions
- ASME tank construction optional on 120-500 model sizes

VENT REQUIREMENTS FOR SUF 120(A) - 250(A)

Number of 90° Elbows Installed	3 Inch Pipe	4 Inch Pipe
	Maximum Feet (Meters)	Maximum Feet (Meters)
One (1)	45 feet (13.7 meters)	115 feet (35 meters)
Two (2)	40 feet (12.2 meters)	110 feet (33.5 meters)
Three (3)	35 feet (10.7 meters)	105 feet (32 meters)
Four (4)	30 feet (9.1 meters)	100 feet (30.5 meters)
Five (5)	N/A	95 feet (29 meters)
Six (6)	N/A	90 feet (27.4 meters)

VENT REQUIREMENTS FOR SUF 300(A) - 500(A)

Number of 90° Elbows Installed	4 Inch Pipe	6 Inch Pipe
	Maximum Feet (Meters)	Maximum Feet (Meters)
One (1)	65 feet (19.8 meters)	115 feet (35 meters)
Two (2)	60 feet (18.2 meters)	110 feet (33.5 meters)
Three (3)	55 feet (16.8 meters)	105 feet (32 meters)
Four (4)	50 feet (15.2 meters)	100 feet (30.5 meters)
Five (5)	45 feet (13.7 meters)	95 feet (29 meters)
Six (6)	40 feet (12.2 meters)	90 feet (27.4 meters)

GAS PRESSURE REQUIREMENTS

Model Number	Manifold Pressure		Minimum Supply Pressure		Maximum Supply Pressure	
	Natural Gas	Propane Gas	Natural Gas	Propane Gas	Natural Gas	Propane Gas
SUF60 120NE(A)	0"W.C. (0 kPa)	0"W.C. (0 kPa)	3.5"W.C. (1.10 kPa)	8.5"W.C. (2.12 kPa)	14"W.C. (3.49 kPa)	14"W.C. (3.49 kPa)
SUF100 150NE(A)	0"W.C. (0 kPa)	0"W.C. (0 kPa)	3.5"W.C. (1.10 kPa)	8.5"W.C. (2.12 kPa)	14"W.C. (3.49 kPa)	14"W.C. (3.49 kPa)
SUF100 199NE(A)	0"W.C. (0 kPa)	0"W.C. (0 kPa)	3.5"W.C. (1.10 kPa)	8.5"W.C. (2.12 kPa)	14"W.C. (3.49 kPa)	14"W.C. (3.49 kPa)
SUF100 250NE(A)	0"W.C. (0 kPa)	0"W.C. (0 kPa)	3.5"W.C. (1.10 kPa)	8.5"W.C. (2.12 kPa)	14"W.C. (3.49 kPa)	14"W.C. (3.49 kPa)
SUF119 300NE(A)	0"W.C. (0 kPa)	0"W.C. (0 kPa)	4.8"W.C. (1.19 kPa)	8.5"W.C. (2.12 kPa)	14"W.C. (3.49 kPa)	14"W.C. (3.49 kPa)
SUF119 400NE(A)	0"W.C. (0 kPa)	0"W.C. (0 kPa)	4.8"W.C. (1.19 kPa)	8.5"W.C. (2.12 kPa)	14"W.C. (3.49 kPa)	14"W.C. (3.49 kPa)
SUF119 500NE(A)	0"W.C. (0 kPa)	0"W.C. (0 kPa)	4.8"W.C. (1.19 kPa)	8.5"W.C. (2.12 kPa)	14"W.C. (3.49 kPa)	14"W.C. (3.49 kPa)

Depending on the installed equivalent length, and/or the number of appliances connected, the supply gas line size may need to be increased beyond the minimum required size.

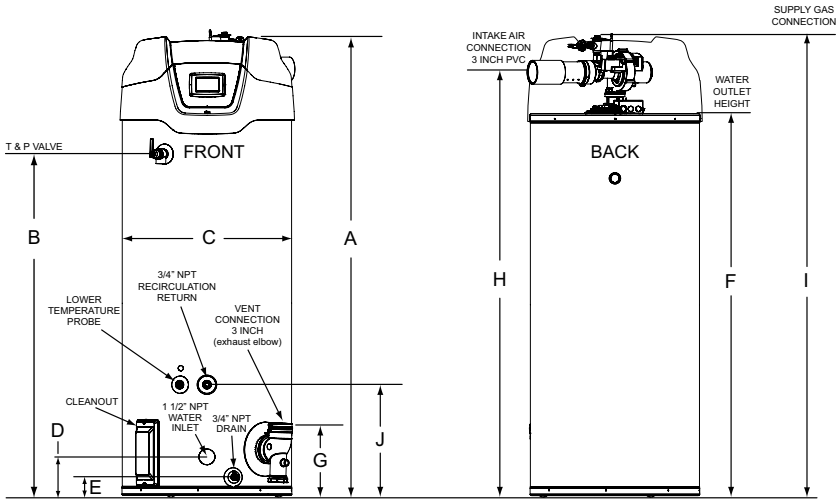

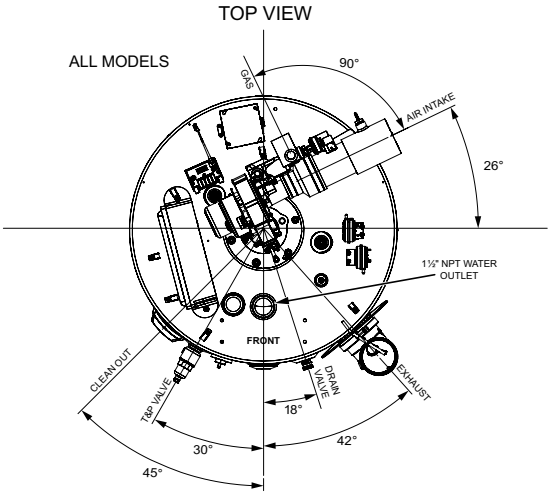

* Center line of water outlet on top of the water heaters is approximately 7 inches from the front edge of the water heater

MODELS 120 THROUGH 250

Model Number	Approx. Capacity		Dimensions										lb/kg	Approx. Shipping Weight Std	Approx. Shipping Weight ASME
			A	B	C	D	E	F	G	H	I	J			
SUF60 120NE(A)	Gallons	60	55 1/2	35	27 3/4	6 5/16	3	42 1/4	11 1/4	48 1/2	53 1/2	18 1/4	lb	460	490
	Liters	227	141	88.9	70.5	16	7.62	107.32	28.6	123.2	135.9	46.36	kg	208	220
SUF100 150 NE(A)	Gallons	100	76 1/2	56 3/8	27 3/4	6 5/16	3	64	11 1/4	70	75 1/2	18 1/4	lb	523	553
	Liters	379	194.9	143.2	70.5	16	7.62	162.6	28.6	177.8	191.8	46.36	kg	237	251
SUF100 199NE(A)	Gallons	100	76 1/2	56 3/8	27 3/4	6 5/16	3	64	11 1/4	70	75 1/2	18 1/4	lb	523	553
	Liters	379	194.9	143.2	70.5	16	7.62	162.6	28.6	177.8	191.8	46.36	kg	237	251
SUF100 250NE(A)	Gallons	100	76 1/2	56 3/8	27 3/4	6 5/16	3	64	11 1/4	70	75 1/2	18 1/4	lb	523	553
	Liters	379	194.9	143.2	70.5	16	7.62	162.6	28.6	177.8	191.8	46.36	kg	237	251

Electrical characteristics-120V-60Hz A.C., 5.0 A
"A" in model represents ASME construction
Propane gas models available
Dimensions and specifications subject to change without notice in accordance with our policy of continuous product improvement.

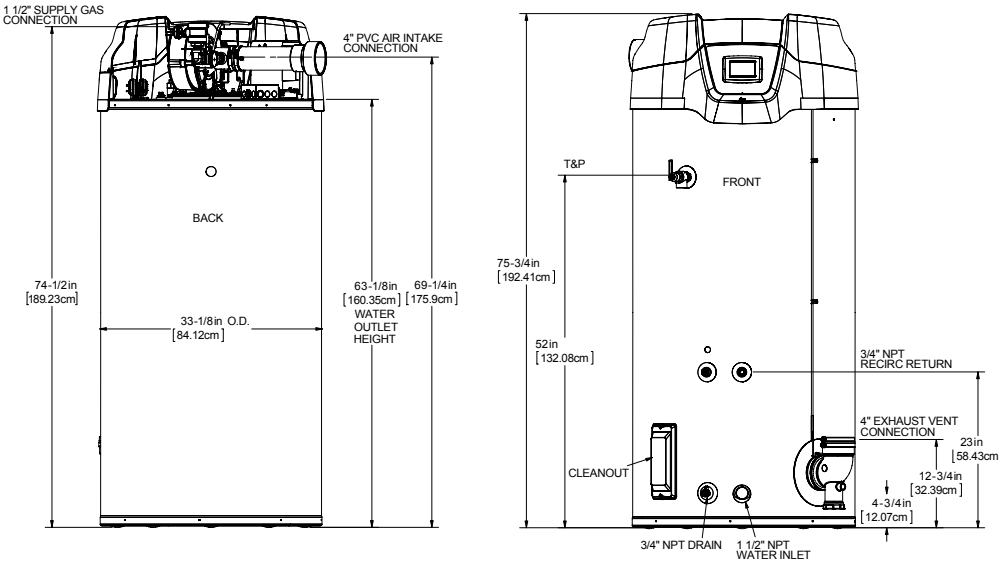

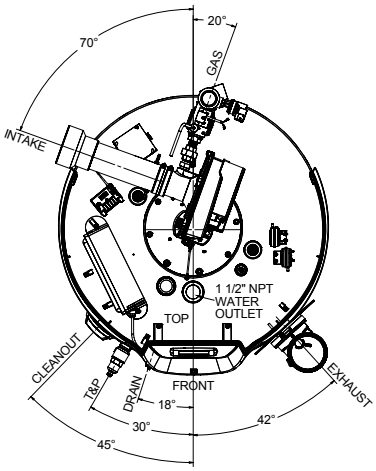

MODELS 300 THROUGH 500

Model Number	Approx. Capacity		Dimensions										lb/kg	Approx. Shipping Weight Std	Approx. Shipping Weight ASME
			A	B	C	D	E	F	G	H	I	J			
SUF119 300NE(A)	Gallons	119	75 3/4	52	33 1/8	4 3/4	4 3/4	63 1/8	12 3/4	69 1/4	74 1/2	23	lb	855	855
	Liters	450.96	192.41	132.08	84.12	12.07	12.07	160.35	32.39	175.9	189.23	58.43	kg	387	387
SUF119 400NE(A)	Gallons	119	75 3/4	52	33 1/8	4 3/4	4 3/4	63 1/8	12 3/4	69 1/4	74 1/2	23	lb	855	855
	Liters	450.96	192.41	132.08	84.12	12.07	12.07	160.35	32.39	175.9	189.23	58.43	kg	387	387
SUF119 500NE(A)	Gallons	119	75 3/4	52	33 1/8	4 3/4	4 3/4	63 1/8	12 3/4	69 1/4	74 1/2	23	lb	855	855
	Liters	450.96	192.41	132.08	84.12	12.07	12.07	160.35	32.39	175.9	189.23	58.43	kg	387	387

Electrical characteristics-120V-60Hz A.C., 5.0 A
"A" in model represents ASME construction
Propane gas models available
Dimensions and specifications subject to change without notice in accordance with our policy of continuous product improvement.

RECOVERY CAPACITY

Model Number	Type of Gas	Input		Thermal Efficiency
		BTU/HR	kW	
SUF60 120NE(A)	Natural/Propane	120,000	35	95%
SUF100 150NE(A)	Natural/Propane	150,000	44	98%
SUF100 199NE(A)	Natural/Propane	199,900	58	97%
SUF100 250NE(A)	Natural/Propane	250,000	73	96%
SUF119 300NE(A)	Natural/Propane	300,000	88	96%
SUF119 400NE(A)	Natural/Propane	399,900	117	95%
SUF119 500NE(A)	Natural/Propane	499,900	146	95%

Model Number	U.S. GALLONS/HR AND LITRES/HR AT TEMPERATURE RISE INDICATED													
	Approx. Capacity	°F	30°F	40°F	50°F	60°F	70°F	80°F	90°F	100°F	110°F	120°F	130°F	140°F
		°C	17°C	22°C	28°C	33°C	39°C	44°C	50°C	56°C	61°C	67°C	72°C	78°C
SUF60 120NE(A)	60 U.S. Gals.	GPH	461	345	276	230	197	173	154	138	126	115	106	99
	227 Litres	LPH	1744	1308	1046	872	747	654	581	523	476	436	402	374
SUF100 150NE(A)	100 U.S. Gals.	GPH	594	445	356	297	255	223	198	178	162	148	137	127
	379 Litres	LPH	2248	1686	1349	1124	964	843	749	674	613	562	519	482
SUF100 199NE(A)	100 U.S. Gals.	GPH	783	588	470	392	336	294	261	235	214	196	181	168
	379 Litres	LPH	2965	2224	1779	1483	1271	1112	988	890	809	741	684	635
SUF100 250NE(A)	100 U.S. Gals.	GPH	970	727	582	485	416	364	323	291	264	242	224	208
	379 Litres	LPH	3671	2753	2202	1835	1573	1377	1224	1101	1001	918	847	787
SUF119 300NE(A)	119 U.S. Gals.	GPH	1164	873	698	582	499	436	388	349	317	291	269	249
	450.96 Litres	LPH	4405	3304	2643	2202	1888	1652	1468	1321	1201	1101	1017	944
SUF119 400NE(A)	119 U.S. Gals.	GPH	1535	1151	921	767	658	576	512	460	419	384	354	329
	450.96 Litres	LPH	5810	4358	3486	2905	2490	2179	1937	1743	1585	1453	1341	1245
SUF119 500NE(A)	119 U.S. Gals.	GPH	1919	1439	1151	959	822	720	640	576	523	480	443	411
	450.96 Litres	LPH	7263	5448	4358	3632	3113	2724	2421	2179	1981	1816	1676	1556

Recovery capacities are based on AHRI rated thermal efficiencies.
For ASME Construction add an "A" to the end of the model number ex: SUF60-120NE(A)

STORAGE CAPACITY

Model Number	U.S. Gallons	Liters
SUF60-120NE(A)	60	227
SUF100-150NE(A)	100	379
SUF100-199NE(A)	100	379
SUF100-250NE(A)	100	379
SUF119-300NE(A)	119	450.96
SUF119-400NE(A)	119	450.96
SUF119-500NE(A)	119	450.96

GAS LINE CONECTION SIZE

Model Number	Natural Gas	Series	Propane Gas
SUF60-120NE(A)	3/4" NPT	300/301	3/4" NPT
SUF100-150NE(A)	3/4" NPT	300/301	3/4" NPT
SUF100-199NE(A)	3/4" NPT	300/301	3/4" NPT
SUF100-250NE(A)	3/4" NPT	300/301	3/4" NPT
SUF119-300NE(A)	1 1/2" NPT	300/301	1 1/2" NPT
SUF119-400NE(A)	1 1/2" NPT	300/301	1 1/2" NPT
SUF119-500NE(A)	1 1/2" NPT	300/301	1 1/2" NPT

OPTIONIAL KITS

OPTIONAL CONCENTRIC VENT KITS

- SUF-120 - 250 vent kit p/n 100111100
- SUF-300 - 500 vent kit p/n 100113124

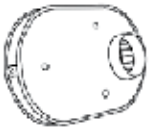

OPTIONAL LOW PROFILE TERMINATION VENT KITS

- 3˝ Flush Mount Vent Kit p/n 100187887
- 4˝ Flush Mount Vent Kit p/n 100187888
- 6˝ Flush Mount Vent Kit p/n 100187889

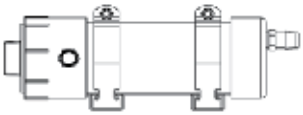

OPTIONAL CONDENSATE NEUTRALIZATION KITS

- SUF-120-199 kit p/n 100112380
- SUF-250-500 kit p/n 100112381

COMMON VENTING KITS FOR UP TO 3 WATER HEATERS (ONE KIT PER WATER HEATER REQUIRED)

Kit	Description
100227396	PVC Common Vent Kit, 120 – 250 Models
100223775	PVC Common Vent Kit, 300 – 500 Models
100227395	Polypropylene Common Vent Kit, 120 -250 Models
100223774	Polypropylene Common Vent Kit, 300 - 500 Models

Installations must comply with all national, state and local codes.
See kit instructions and corresponding water heater manual for detailed installation instructions and additional information.
50 Feet maximum equivalent length of straight pipe common vent and elbows
NOTE: Order 1 kit for each water heater
See the Common Vent Kit manual or spec sheet for detailed information.

SUGGESTED SPECIFICATION

(Natural or Propane) gas water heater(s) shall be State SUF Ultra Force model # _____ or equal, minimum 95% thermal efficiency, a storage capacity of _____ gallons, an rating of _____ BTUs per hour, a recovery rating of ___ gallons per hour (gph) at 100°F rise and a maximum hydrostatic working pressure of 160 PSI. Water heater(s) shall:

1. Modulating gas burner that automatically adjusts the input based on demand; 2. No charge connectivety shall be provided allowing for remote viewing and fault notificaion via app. 3. Powered anodes that are non sacrificial and maintenance free; 4. Have seamless glass-lined steel tank construction, with glass lining applied to all water-side surfaces after the tank has been assembled and welded; 5. Meets the thermal efficiency and/or standby loss requirements of the U. S. Department of Energy and current edition of ASHRAE/IES 90.1; 5. Have foam insulation and a CSA Certified and ASME rated T&P relief valve; 7. Have a down-fired power burner designed for precise mixing of air and gas for optimum efficiency, requiring no special calibration on start-up; 8. Be approved for 0˝ clearance to combustibles on sides and rear and 1 1/2” on top.

The control shall be an integrated solid-state temperature and ignition control device with integral diagnostics, graphical user interface, fault history display, and shall have digital temperature readout.

1. All models are design certified by Underwriters Laboratories (UL), Inc., according to ANSI Z21.10.3 - CSA 4.3 standards governing storage type water heaters; 2. Meet the thermal efficiency and standby loss requirements of the U. S. Department of Energy and current edition ASHRAE/IES 90.1. Complies with SCAQMD Rule 1146.2 and other air quality management districts with similar requirements for low NOx emissions.

120K-250K BTU INPUT:

For Standard Power Venting: Water heater(s) shall be suitable for standard power venting using a (3˝ or 4˝) ____ diameter PVC pipe for a total distance of (50 ft. or 120 ft.) ____ equivalent feet of vent piping. For Power Direct Venting: Water heater(s) shall be suitable for power direct venting using a (3˝ or 4˝) ____ diameter PVC pipe for a total distance of (50 ft. or 120 ft.) ____ equivalent feet of vent piping and (50 ft. or 120 ft.) ____ equivalent feet of intake air piping.

300K - 500K BTU INPUT:

For Standard Power Venting: Water heater(s) shall be suitable for standard power venting using a (4˝ or 6˝) ____ diameter PVC pipe for a total distance of (70 ft. or 120 ft.) ____ equivalent feet of vent piping. For Power Direct Venting: Water heater(s) shall be suitable for power direct venting using a (4˝ or 6˝) ____ diameter PVC pipe for a total distance of (70 ft. or 120 ft.) ____ equivalent feet of vent piping and (70 ft. or 120 ft.) ____ equivalent feet of intake air piping.

Operation of the water heater(s) in a closed system where thermal expansion has not been compensated for (with a properly sized thermal expansion tank) will void the warranty.

© June 2018 State Water Heaters. All Rights Reserved