CADET® PRO™ ELONGATED TOILET
10" ROUGH-IN
VITREOUS CHINA

CADET® PRO™ ELONGATED TOILET
10" ROUGH-IN

❑ **215CB.004**
- Features the **Cadet® Flushing System**
- Vitreous china
- Low consumption (6.0 Lpf/1.6 gpf) toilet
- Trade exclusive tank
- PowerWash® rim scrubs bowl with each flush
- Robust metal trip lever & metal shank fill valve
- Includes EZ-Install Tools w/color match bowl caps
- EverClean® surface included
- 3" flush valve
- Fully-glazed 2-1/8" trapway
- 10" (254mm) rough-in
- Generous 9" x 8" water surface area
- Chrome finish trip lever is supplied
- 1,000g MaP Score** at 1.6 gpf
- 5 year warranty

❑ **3517C.101** Elongated Bowl
❑ **4188B.004** Tank

Nominal Dimensions:
717 x 460 x 733mm (28-1/4" x 18-1/8" x 28-7/8")

Fixture only, seat and supply sold separately

Alternative Tank Configuration Available:
❑ **4188B.005** Tank complete with trip lever located on right side

Compliance Certifications -
Meets or Exceeds the Following Specifications:
- ASME A112.19.2-2008/CSA B45.1-08 for Vitreous China Fixtures

** Maximum Performance (MaP) testing performed by IAPMO R&T Lab. MaP Report conducted by Gauley Associates Ltd. and Koeller and Company.

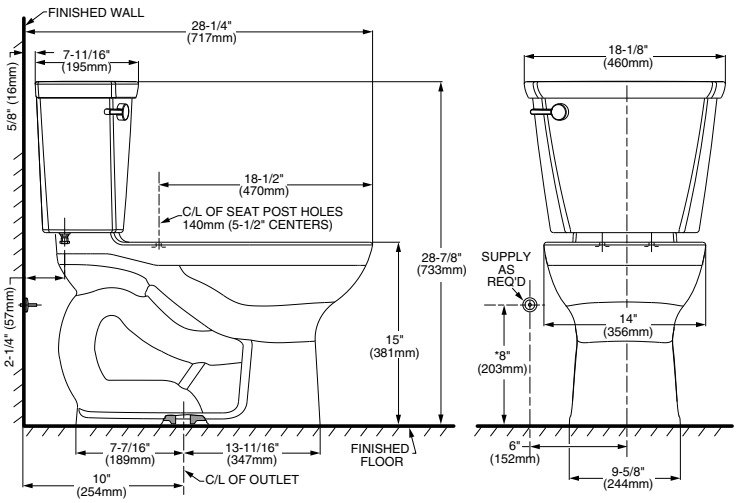

NOTES:
THIS TOILET IS DESIGNED TO ROUGH-IN AT A MINIMUM DIMENSION OF 254MM (10") FROM FINISHED WALL TO C/L OF OUTLET.
SUPPLY NOT INCLUDED WITH FIXTURE AND MUST BE ORDERED SEPARATELY.
* DIMENSION SHOWN FOR LOCATION OF SUPPLY IS SUGGESTED.

IMPORTANT: Dimensions of fixtures are nominal and may vary within the range of tolerances established by ANSI Standard A112.19.2.
These measurements are subject to change or cancellation. No responsibility is assumed for use of superseded or voided pages.

To Be Specified:
❑ Color: ❑ White ❑ Bone ❑ Linen
❑ Seat: #5321.110 EverClean® Elongated Seat with Slow Close Snap-Off Hinges
❑ Supply with stop:

Cadet® PRO™

© 2018 AS America Inc.

PART OF LIXIL