INSTALLATION INSTRUCTIONS

FLOOR MOUNTED BOTTOM OUTLET FLUSH VALVE TOILETS

American Standard

ALL 16-1/2" RIGHT HEIGHT® TOILETS MEET ADA GUIDELINES:

Meets the American Disabilities Act Guidelines and ANSI A117.1 Requirements for the Physically Challenged

Thank you for selecting American Standard – the benchmark of fine quality for over 100 years. To ensure this product is installed properly, please read these instructions carefully before you begin. (Certain installations may require professional help.) Also be sure your installation conforms to local codes.

CAUTION: PRODUCT IS FRAGILE. TWO PEOPLE ARE RECOMMENDED FOR HANDLING TO AVOID BREAKAGE AND POSSIBLE INJURY!
NOTE: *For proper operation product requires a minimum of 30 psi working line pressure*

RECOMMENDED TOOLS AND MATERIALS

Putty Knife	Regular Screwdriver	Sealant	Carpenters Level
Adjustable Wrench	Phillips Screwdriver	Tape Measure	Flush Valve

BACK-TO-BACK INSTALLATION

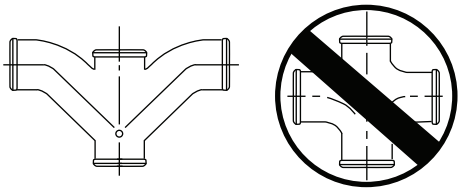

Recommended fitting type for back-to-back installations.

Depending upon your plumbing and venting conditions, the flow from this toilet in a back-to-back installation may create a vacuum on the system and draw water from the opposing bowl. The National Standards Plumbing Code prohibits the use of a cross fitting for drainage as throw over is possible. The code does approve a directional "Y" style fitting with proper venting to direct the water downward and away from the other toilet.

1 **Pictures may not exactly define contour of china.**

TOP SPUD		BOWL TYPE	BACK SPUD	
A	B		C	D
381mm (15")	673mm (26-1/2")	NORMAL HEIGHT 15"	381mm (15")	400mm (15-3/4")
419mm (16-1/2")	711mm (28")	RIGHT HEIGHT® 16-1/2"	419mm (16-1/2")	438mm (17-1/4")
356mm (14")	673mm (26-1/2")	YOUTH HEIGHT 14"	———	———

TOP SPUD

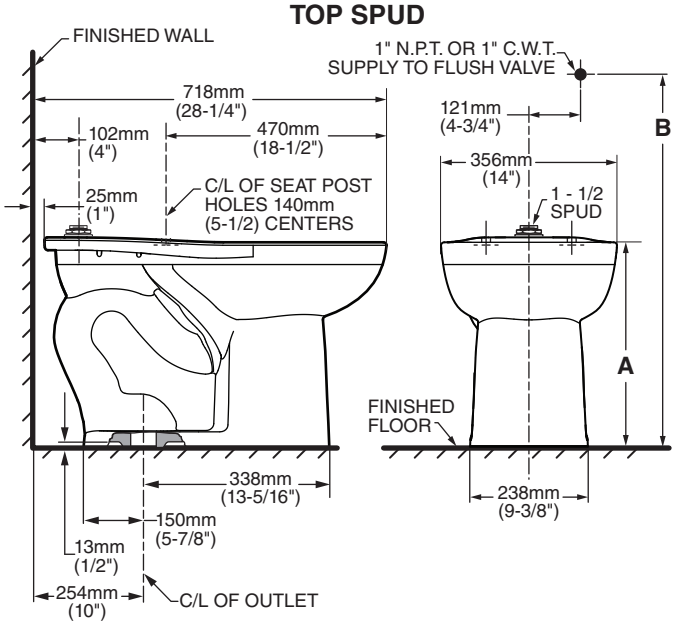

BACK SPUD

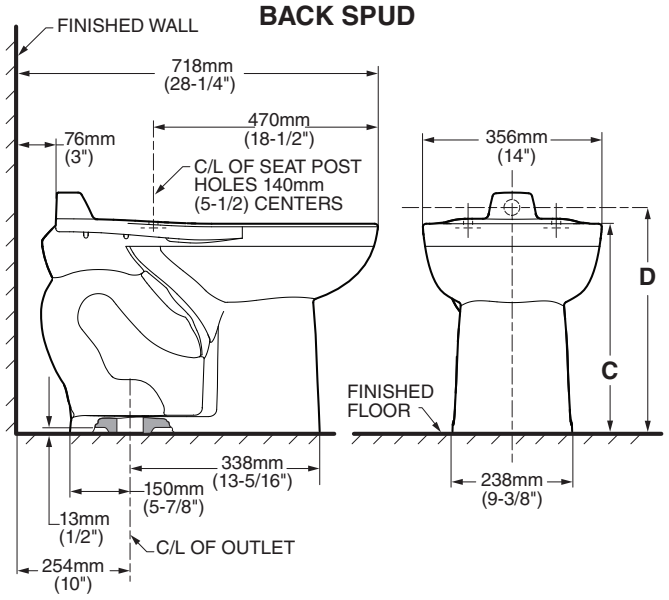

SAVE FOR FUTURE USE

Product names listed herein are trademarks of AS America, Inc.
© AS Americas Inc. 2019

7301166-100 Rev. 4 9/19

7601166-100R4

2

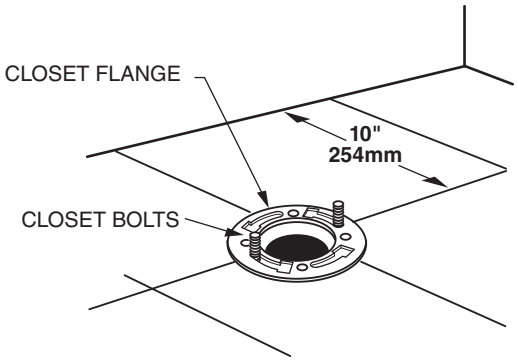

INSTALL CLOSET BOLTS
Install closet bolts in flange channel, turn 90°, and slide into place 6" (152 mm) apart and parallel to wall.

3

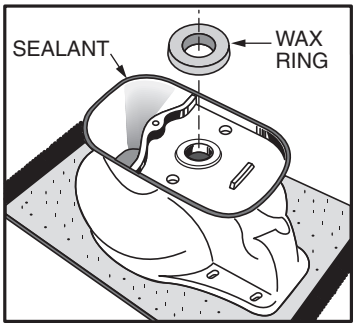

INSTALL WAX SEAL
Invert toilet on floor (cushion to prevent damage), and install wax ring evenly around waste flange (horn), with tapered end of ring facing toilet. Apply a thin bead of sealant around toilet base.

4

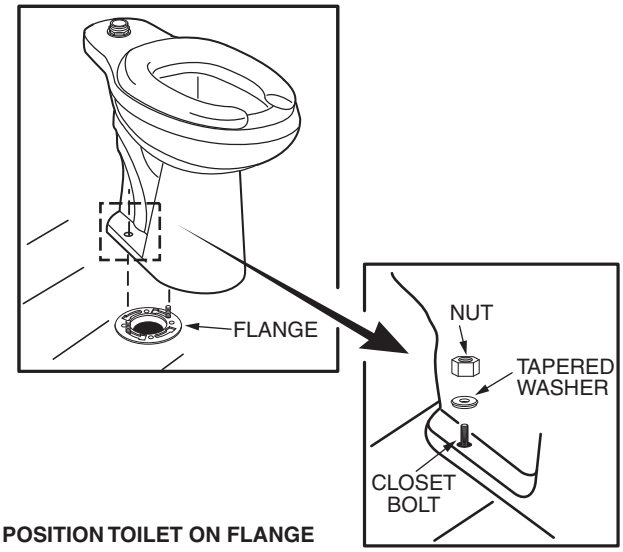

POSITION TOILET ON FLANGE

a. Unplug floor waste opening and install toilet on closet flange so bolts project through mounting holes.
b. Loosely install retainer washers and nuts. Side of washers marked "THIS SIDE UP" *must* face up!

5

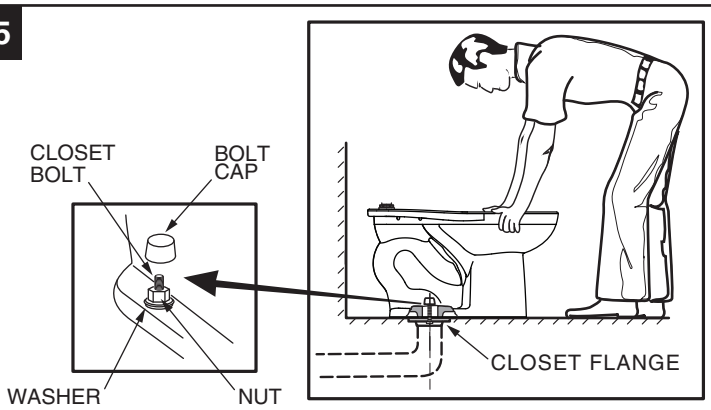

INSTALL TOILET

a. Position toilet squarely to wall and, with a rocking motion, press bowl down fully on wax ring and flange.
Alternately tighten nuts until toilet is firmly seated on floor.

⚠ CAUTION:
DO NOT OVERTIGHTEN NUTS
OR BASE MAY BE DAMAGED!

b. Install caps on washers. (If necessary, cut bolt height to size before installing caps.)
c. Smooth off the bead of sealant around base. Remove excess sealant.

AS AMERICA, INC. ONE YEAR LIMITED WARRANTY

If inspection of this AS America, Inc. ("American Standard") plumbing product, within one year after its initial purchase, confirms that it is defective in materials or workmanship, American Standard will repair or, at its option, exchange the product for a similar model.

This limited warranty applies only to the original purchaser and installation of these products. In the event of a limited warranty claim, proof of purchase will be required—save sales receipt.

This limited warranty does not apply to local building code compliance. Since local building codes vary considerably, the purchaser of this product should check with a local building or plumbing contractor to insure local code compliance before installation.

This limited warranty is void if the product has been moved from its initial place of installation; if it has been subjected to faulty maintenance, abuse, misuse, accident or other damages; if it was not installed in accordance with American Standard's instructions; or if it has been modified in a manner inconsistent with the product as shipped by American Standard.

American Standard's option to repair or exchange the product under this limited warranty does not cover any labor or other costs of removal or installation. IN NO EVENT WILL AMERICAN STANDARD BE LIABLE FOR THE COST OF REPAIR OR REPLACEMENT OF ANY INSTALLATION MATERIALS, INCLUDING BUT NOT LIMITED TO, TILES, MARBLE, ETC. American Standard will not be responsible for any other incidental or consequential damages attributable to a product defect or to the repair or exchange of a defective product, all of which are expressly excluded from this limited warranty. This limited warranty does not cover any liability for consequential or incidental damages, all of which are hereby expressly disclaimed, or the extension beyond the duration of this limited warranty of any implied limited warranties, including those of merchantability or fitness for an intended purpose. (Some states or provinces do not allow the exclusion or limitation of implied limited warranties, so this exclusion may not apply to you.)

This limited warranty gives you specific legal rights. You may have other statutory rights that vary from state to state or from province to province, in which case this limited warranty does not affect such statutory rights.

In the United States:
American Standard Brands
1 Centennial Ave
Piscataway, New Jersey 08854
Attention: Director of Customer Care
For residents of the United States, warranty information may also be obtained by calling the following toll free number: (800) 442-1902
www.americanstandard.com

In Canada:
LIXIL Canada, ULC
5900 Avebury Rd.
Mississauga, Ontario
Canada L5R 3M3
Toll Free: (800) 387-0369
www.americanstandard.ca

In Mexico:
American Standard B&K Mexico
S. de R.L. de C.V.
Via Morelos #330
Col. Santa Clara
Ecatepec 55540 Edo. Mexico
Toll Free: 01-800-839-1200
www.americanstandard.com.mx

THIS WARRANTY IS NOT TRANSFERABLE FROM ORIGINAL CONSUMER PURCHASER.