INSTALLATION INSTRUCTIONS
CARE AND MAINTENANCE

American Standard

WALL HUNG SINK

NOTE: For installation of models using concealed or exposed arms, follow instruction provided by arms manufacturer.

Thank you for selecting American Standard - the benchmark of fine quality for over 100 years. To ensure this product is installed properly, please read these instructions carefully before you begin. (Certain installations may require professional help.) Also be sure your installation conforms to local codes.

CAUTION: PRODUCT IS FRAGILE. TO AVOID BREAKAGE AND POSSIBLE INJURY HANDLE WITH CARE!
NOTE: *Pictures may not exactly define contour of china and components.*

OBSERVE LOCAL PLUMBING AND BUILDING CODES

Recommended Tools & Materials

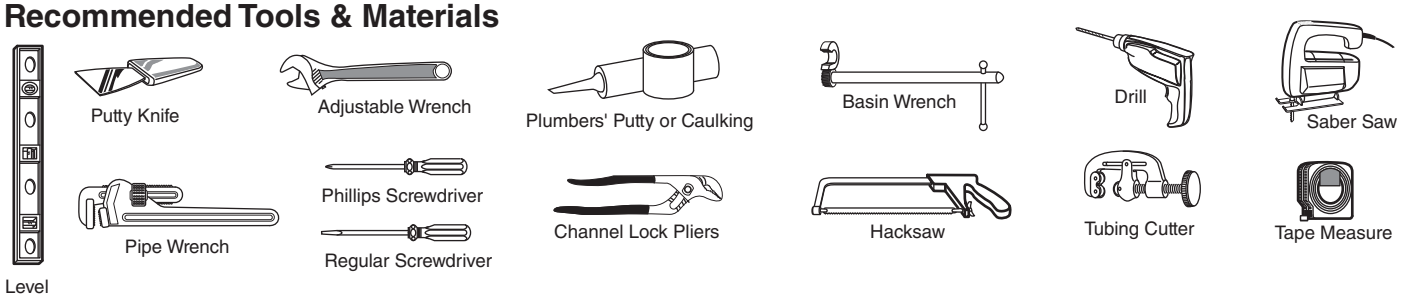

1 Provide suitable reinforcement behind finished wall for lavatory hanger mounting screws. *Determine horizontal center line location of support from the table listed in Step 2. (Make sure support bottom extends to lavatory back wall bottom.)

NOTE: If replacing an existing sink be certain to shut off water supply before removing old sink.

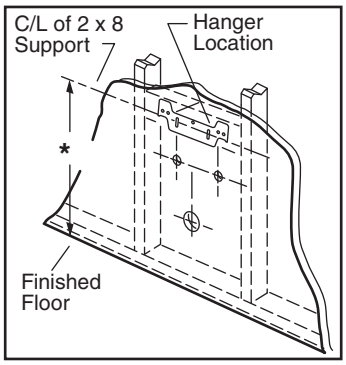

2 Determine the desired rim height (for example 32") then select from the Table at right the height of the hanger mounting bolts centerline

EXAMPLE:

For Comrade:
32" - 2-1/2" = 29-1/2"

TABLE

Part #	Model	Distance "A"
0124	Comrade	- 2-1/2" (64mm)
0321	Declyn	- 2-3/4" (70mm)
0355/0356	Lucerne	- 1" (25mm)
0372/0373	Penlyn	- 1/8" (3mm)
4867/4869	Regalyn	+ 2-3/4" (70mm)
9024	Decorum 18-1/4" x 20-1/16"	- 3-11/16" (93mm)
9134	Decorum 20-1/2" x 21-1/4"	- 3-11/16" (93mm)

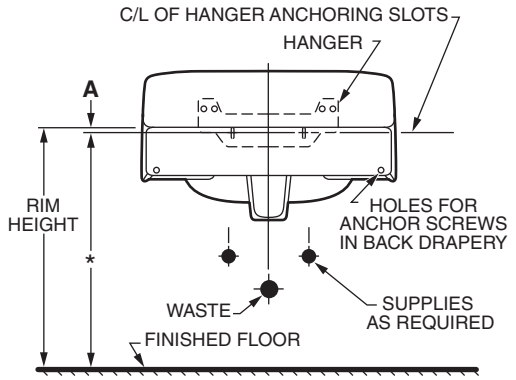

3 Position hanger according to Step 2, making sure its center is aligned with the waste hole centerline. Mark the hanger screw locations through its mounting holes.

4 Drill pilot holes in positioning screw slots of hanger. **Note:** Some models are supplied with anchor screws, or steel hangers for lavatory installations. Other models are not provided with mounting hardware which can be purchased at local hardware outlets. Lavatories with bottom anchor screw holes should be secured with anchor screws in addition to hangers.

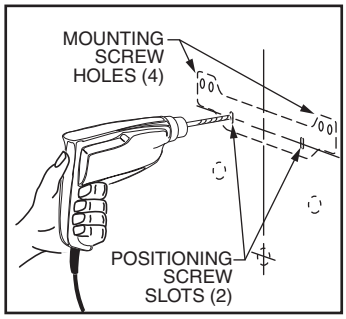

SAVE FOR FUTURE USE

Product names listed herein are trademarks of AS America, Inc.
© AS America, Inc. 2020

730427-100R8
730427-100 Rev. 8 8/20

5 Affix hanger to wall (hand tighten only). Mount lavatory for positioning, level the deck, and mark bottom anchor screw holes (if applicable). Remove lavatory, tighten the hanger positioning screws and drill pilot holes for anchor screws and 4 mounting screws. Install and tighten the mounting screws.

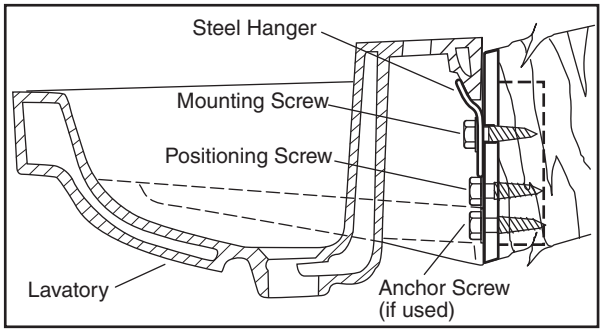

6 Following manufacturers instructions, install faucet and drain assembly. (Not included). Be certain to apply a bead of sealing putty on the underside of the drain (Part "A") in order to ensure a watertight seal between the lavatory and drain. Remove excess putty after installing drain on lavatory.

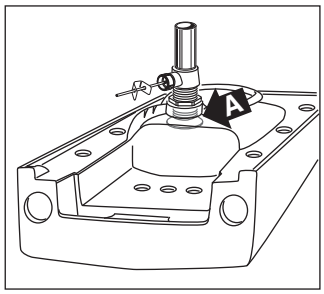

7 Return the fitted lavatory to the installed position. Connect trap to drain assembly hand tight to check alignment. It may be necessary to cut off part of the tailpiece (area "B") or part of the horizontal leg of the trap (area "C").

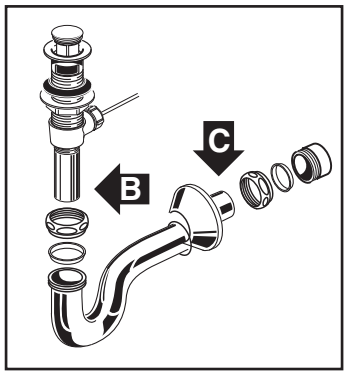

8 Secure lavatory on hanger as shown in **5**. Insert and tighten anchor screws if applicable. Connect hot and cold supply lines to the shut-off valves. Tighten trap joints for watertight assembly. Apply a bead of caulk around the edge which contacts the wall as shown.

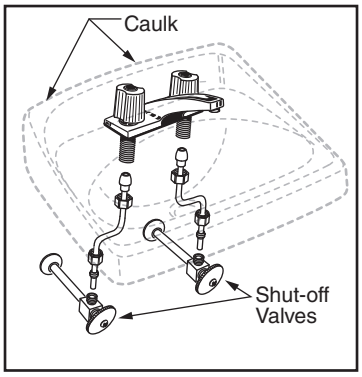

9 **Installing Optional Shroud**

Position semi-pedestal/shroud under basin and secure to wall using 2" (51mm) screws.

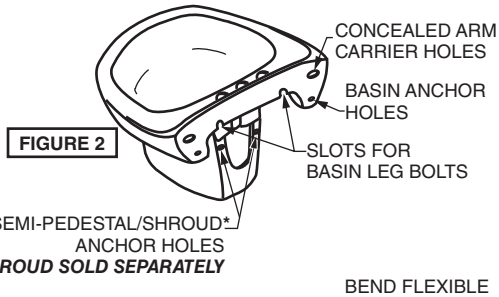

FIGURE 2

***SHROUD SOLD SEPARATELY**

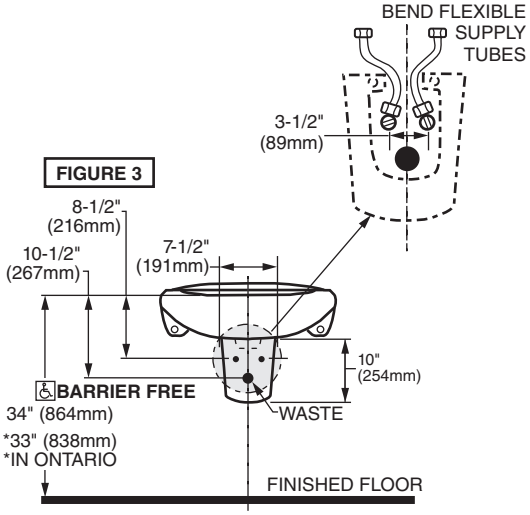

FIGURE 3

AS AMERICA, INC. ONE YEAR LIMITED WARRANTY

If inspection of this AS America, Inc. ("American Standard") plumbing product, within one year after its initial purchase, confirms that it is defective in materials or workmanship, American Standard will repair or, at its option, exchange the product for a same or similar model.

This limited warranty applies only to the original purchaser and installation of these products. In the event of a limited warranty claim, proof of purchase will be required—save sales receipts.

This limited warranty does not apply to local building code compliance. Since local building codes vary considerably, the purchaser of this product should check with a local building or plumbing contractor to ensure local code compliance before installation.

This limited warranty will be void if the product has been moved from its initial place of installation; if it has been subjected to faulty maintenance, abuse, misuse, accident or other damage; if it was not installed in accordance with American Standard's instructions; or if it has been modified in a manner inconsistent with the product as shipped by American Standard.

American Standard's option to repair or exchange the product under this limited warranty does not cover any labor or other costs of removal or installation including any costs of any surrounding material such as tile or marble. American Standard is not responsible for any other incidental or consequential damages attributed to a product defect or to the repair or exchange of a defective product, all of which are expressly excluded from the warranty. This limited warranty does not cover the extension beyond the duration of this limited warranty of any implied limited warranties, including those of merchantability or fitness for an intended purpose. (Some states or provinces do not allow the exclusion or limitation of implied warranties, so this exclusion may not apply to you.)

This limited warranty gives you specific legal rights. You may have other statutory rights that vary from state to state or from province to province, in which case this limited warranty does not affect such statutory rights.

For service under this warranty, it is suggested that a claim be made through the contractor or dealer from or through whom the product was purchased, or that a service request (including a description of the product model and of the defect) be sent to the following address:

In the United States:
American Standard Brands,
1 Centennial Ave
Piscataway, New Jersey 08854
Attention: Director of Consumer Affairs
For residents of the United States, warranty information may also be obtained by calling the following toll free number: (800) 442-1902
www.americanstandard.com

In Canada:
LIXIL Canada ULC
5900 Avebury Road
Mississauga, Ontario
Canada L5R 3M3
Toll Free: (800) 387-0369
www.americanstandard.ca

In Mexico:
Customer Service Manager
AS Maquila, S.A. de C.V.
Via Morelos #330
Col. Santa Clara
Ecatepec 55540 Edo. Mexico
www.americanstandard.com.mx

THIS WARRANTY IS NOT TRANSFERABLE FROM ORIGINAL CONSUMER PURCHASER.