American Standard

INSTALLATION INSTRUCTIONS

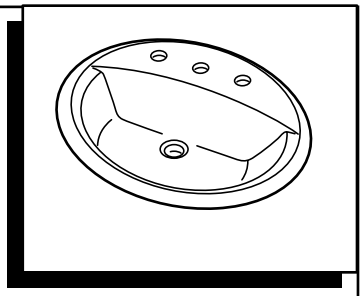

Countertop Sink

Introduction: Thank you for selecting our products...products which have been the benchmarks of fine quality for years. To help insure that the installation process will proceed smoothly, please read these instructions carefully before you begin. Also, review the recommended tools and materials list; carefully unpack and examine your new plumbing fixture.

⚠ **CAUTION: PRODUCT IS FRAGILE. TO AVOID BREAKAGE AND POSSIBLE INJURY HANDLE WITH CARE!**

NOTE: *Pictures may not exactly define contour of china and components.*

Recommended Tools & Materials

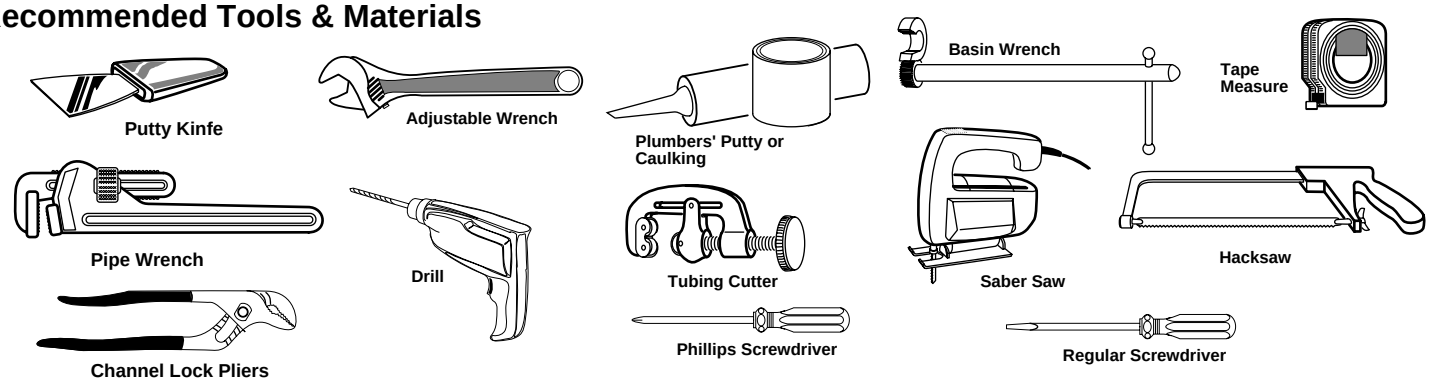

1

Using the template provided,locate the position of thesink. Provide proper clearance under the countertop for the faucet supply lines, drain assembly and the structural parts of the cabinet.

NOTE: If replacing an existing sink be certain to shut off water supply before removing old sink.

2

Drill a clearance hole inside the perimeter line of the template.

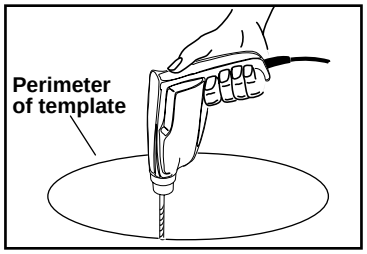

Cut opening around the perimeter of the template.

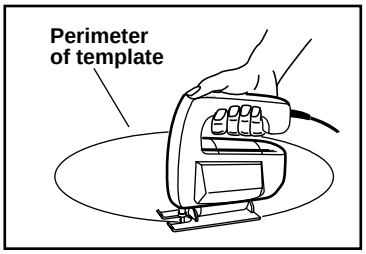

3

Mount the faucet and drain assembly (not included) on the sink following faucet manufacturer's instructions. Be certain to apply a bead of sealing putty on the underside of the drain (Part "A") in order to ensure a watertight seal between the sink and drain. Remove excess putty after installing drain on sink.

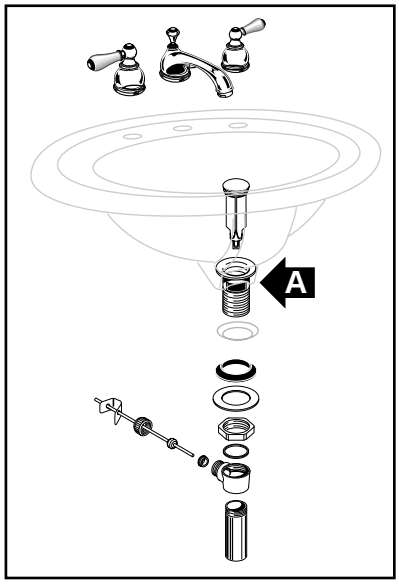

© American Standard Inc. 2003

4

Before applying the sealant, place the sink temporarily into the cut-out. Check for alignment and clearance. Then mark the sink *and* countertop in several places as a guide for the installation location.

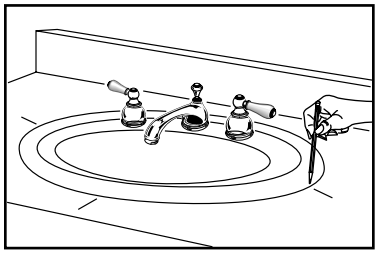

5

After checking fit and alignment, turn sink upside down and apply a generous portion of sealant around the underside of the rim near the edge. Carefully lower sink in place, align with marks made earlier, and press downfirmly. Allow sealant to set before connecting supplies and drain.

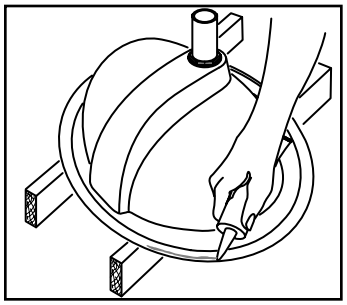

6

Connect supply line to faucet (finger tight) and carefully bend tubes to engage with the supply shut-off valves. Tighten connections at faucet and shut-off valves for secure seal.

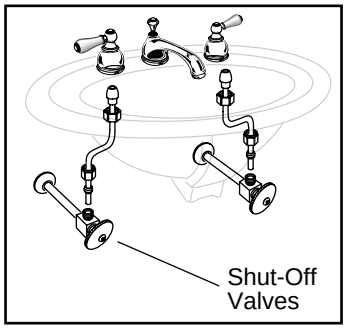

7

Connect trap to drain assembly hand tight to check alignment. It may be necessary to cut off part of the tailpiece (area "B") or part of the horizontal leg of the trap (area "C"). Secure joints for watertight assembly.

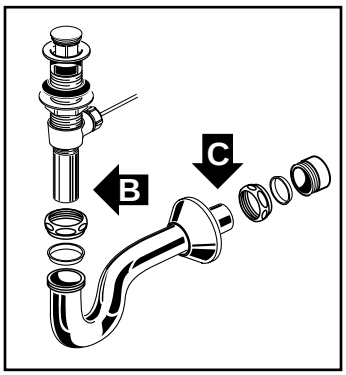

American Standard Ideal Standard Incesa Standard Sadosa Standard Cedelca Saniwares

AMERICAN STANDARD ONE-YEAR LIMITED WARRANTY

If inspection of this American Standard plumbing product, within one year after its initial installation, confirms that it is defective in materials or workmanship, American Standard will repair or, at its option, exchange the product for a similar model.

This limited warranty **does not apply** to local building code compliance; since local building codes vary considerably, the purchaser of this product should check with a local building or plumbing contractor to insure local code compliance before installation.

This warranty **shall be void** if the product has been moved from its initial place of installation; if it has been subjected to faulty maintenance, abuse, misuse, accident or other damage; if it was not installed in accordance with American Standard's instructions; or if it has been modified in a manner inconsistent with the product as shipped by American Standard.

American Standard's option to repair or exchange the product under this warranty does not cover any labor or other costs of removal or installation, **nor shall American Standard be responsible for any other incidental or consequential damages attributable to a product defect or to the repair or exchange of a defective product, all of which are expressly excluded from this warranty.** (Some states or provinces do not allow the exclusion or limitation of implied warranties, so this exclusion may not apply to you.)

This warranty gives you specific legal rights. You may have other statutory rights that vary from state to state or from province to province, in which case this warranty does not affect such statutory rights.

For service under this warranty, it is suggested that a claim be made through the contractor or dealer from or through whom the product was purchased, or that a service request (including a description of the product model and of the defect) be sent to the following address:

In the United States:
American Standard, Inc.
One Centennial Ave.
Piscataway, New Jersey 08855
Attention: Director of Consumer Affairs

Toll Free: (800) 442-1902

In Canada:
American Standard, Inc.
2480 Stanfield Rd.,
Mississauga, Ontario
Canada L4Y 1S2
Toll Free: (800) 387-0369

In Mexico:
Customer Service Manager
American Standard, Inc.
Via Morelos #330
Col. Santa Clara
Ecatepec 55540 Edo. Mexico