BOULEVARD®
UNDER COUNTER SINK
VITREOUS CHINA

BARRIER FREE

BOULEVARD® UNDER COUNTER SINK

❑ **0610.000 Unglazed Rim**
- Rectangular under mount sink with unique tapered interior bowl
- Made from vitreous china
- Unglazed rim
- Front overflow
- Supplied with mounting kit (047194-0070A) and template

Nominal Dimensions:
20-1/4" x 16"
(514 x 406 mm)

Bowl Size:
17" (432 mm) wide
13" (330 mm) front to back
6" (152 mm) deep

Compliance Certifications - Meets or Exceeds the Following Specifications:
- ASME A112.19.2/CSA B45.1

To Be Specified:
❑ Color: ❑ White ❑ Linen
❑ Faucet*:
❑ Faucet Finish:
❑ Supplies:
❑ 1-1/4" Trap:

* See faucet section for additional models available

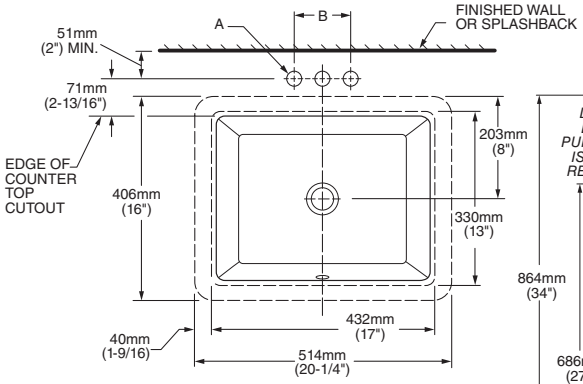

FITTING	A	B
CENTERSET	27mm(1-1/16")	102mm(4")
SPREAD	32mm(1-1/4")	203mm(8")

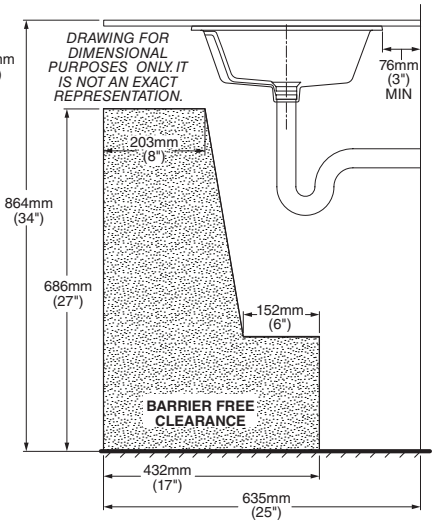

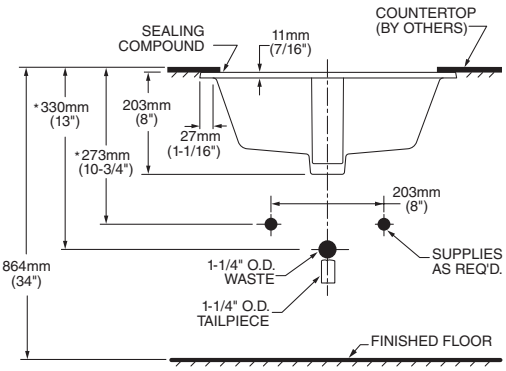

▼ **DETAIL OF MOUNTING CLIP (KIT No.47194.0070A)**

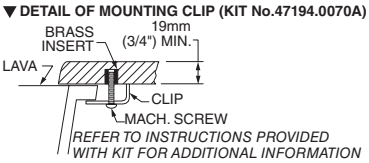

MEETS THE AMERICANS WITH DISABILITIES ACT GUIDELINES AND ICC ANSI A117.1 ACCESSIBLE AND USABLE BUILDINGS AND FACILITIES - CHECK LOCAL CODES.
Install lavatory 864mm (34") from finished floor.
Lavatory installed 51mm (2") minimum from front edge of countertop provides 686mm (27") knee clearance area.

NOTES:
WE RECOMMEND USING BASIN AS A TEMPLATE TO DETERMINE PROPER CONTOUR. CUT COUNTERTOP 38MM (1-1/2") INSIDE BASIN CONTOUR.
* DIMENSIONS SHOWN FOR LOCATION OF SUPPLIED AND "P" TRAP ARE SUGGESTED.
▼ UNDERCOUNTER MOUNTING KIT SUPPLIED WITH SINK.
FITTINGS NOT INCLUDED WITH FIXTURE AND MUST BE ORDERED SEPARATELY.
SEALING COMPOUND SUPPLIED BY OTHERS.

IMPORTANT: Dimensions of fixtures are nominal and may vary within the range of tolerances established by ANSI Standard A112.19.2.
These measurements are subject to change or cancellation. No responsibility is assumed for use of superseded or voided pages.

© 2022 AS America Inc.

PART OF LIXIL

Rev. 12/14