RELIANT® 3
SINGLE CONTROL LAVATORY FAUCET
0.5 GPM

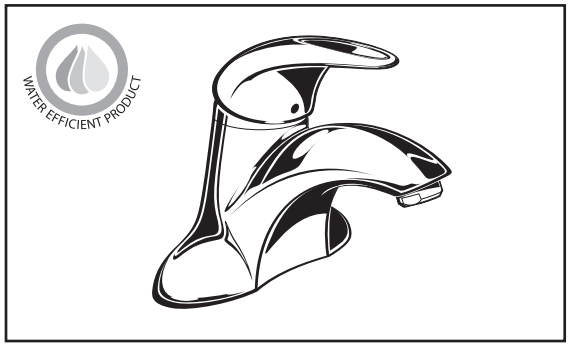

MODEL NUMBER:

- ❑ **7385.058 Reliant 3 Single Control Centerset**
  Indexed metal lever handle. Metal Speed Connect® drain.
  0.5 gpm pressure compensating vandal resistant spray.
- ❑ **7385.053 Reliant 3 Single Control Centerset**
  Metal lever handle. Grid drain LESS pop-up hole.
  0.5 gpm pressure compensating vandal resistant spray.
- ❑ **7385.050 Reliant 3 Single Control Centerset**
  Indexed metal lever handle. LESS drain. LESS pop-up hole.
  0.5 gpm pressure compensating vandal resistant spray.

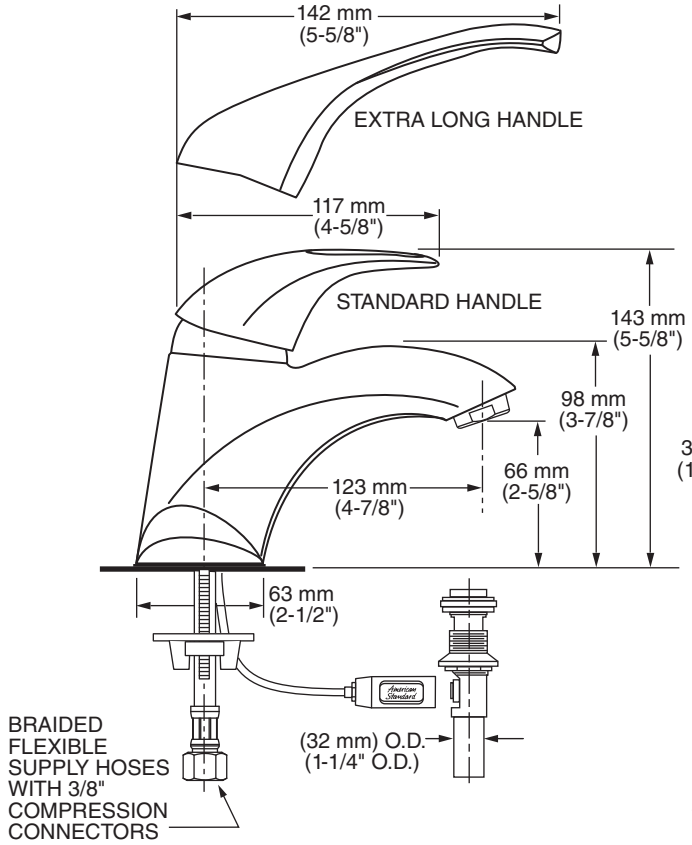

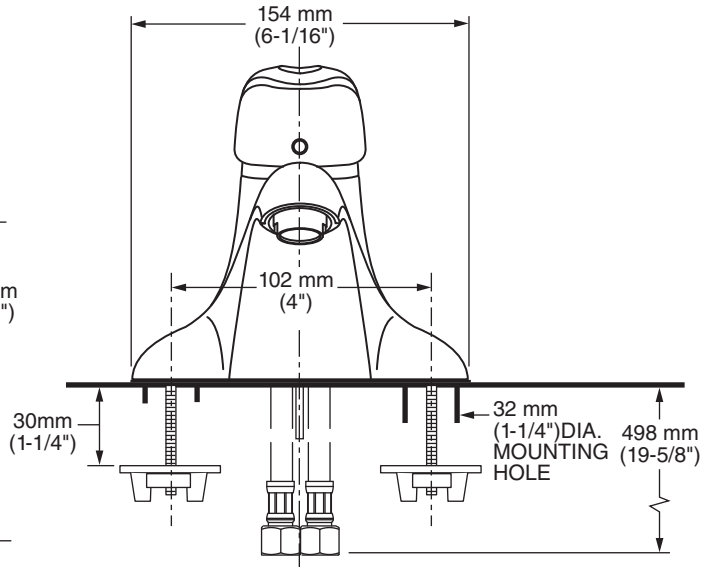

GENERAL DESCRIPTION:

All metal body with indexed metal lever handle or optional extra long lever handle. Washerless 47 mm ceramic disc valve cartridge with integral hot limit safety stop. Durable cast brass waterway. 20" (500 mm) long flexible stainless steel drain cable is pre-assembled to faucet body (on 7385.058). Metal Speed Connect® drain body (on 7385.058) with 1-1/4" (32 mm) tail piece. Braided flexible supply hoses with 3/8" compression connections. Pressure compensating vandal resistant spray with 0.5 gpm/1.9 L/min. maximum flow rate.

PRODUCT FEATURES:

Pressure Compensating Spray: Provides a constant water flow of 0.5 gpm throughout the pressure range.

Cast Brass Waterway with Flexible Supply Hoses: Strong and durable. Less potential for leaks.

Ceramic Disc Valve Cartridge: Assures smooth, precise valve control and a lifetime of drip-free, maintenance-free performance.

Adjustable Hot Limit Safety Stop: Limits the amount of hot water allowed to mix with cold. Reduces the risk of accidental scalding.

Lead Free: Faucet contains ≤ 0.25% total lead content by weighted average.

Simple One-Person Installation: Faucet drops in from top. Quick spin nuts secure faucet in place.

SUGGESTED SPECIFICATION

Single control lavatory fitting shall feature an all metal body with metal lever handle. Shall feature a cast brass waterway with flexible hose connections. Shall also feature a washerless ceramic disc valve cartridge with integral hot limit safety stop. Shall feature water conserving vandal resistant 0.5 gpm/1.9 L/min. pressure compensating spray. Shall also feature a metal drain body with stainless steel cable actuation. Fitting shall be American Standard Model # 7385.05__.___.

© 2015 AS America, Inc.

RELIANT® 3
SINGLE CONTROL LAVATORY FAUCET
0.5 GPM

CODES AND STANDARDS

These products meet or exceed the following codes and standards:

ANSI A117.1
ASME A112.18.1
NSF 61/Section 9 and Annex G
CSA B125.1

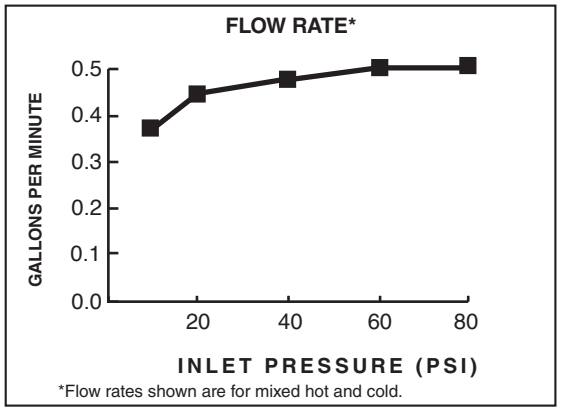

Product Number	Description	Finish Option
		Polished Chrome
		002
7385.058	Reliant 3 Single Control Centerset. Indexed (Red/Blue) metal lever handle. Metal Speed Connect® drain. Pressure compensating vandal resistant 0.5 gpm spray.	
7385.053	Reliant 3 Single Control Centerset. Indexed (Red/Blue) metal lever handle. with grid drain, LESS pop-up hole. Pressure compensating vandal resistant 0.5 gpm spray.	
7385.050	Reliant 3 Single Control Centerset. Indexed (Red/Blue) metal lever handle. Less drain, LESS pop-up hole. Pressure compensating vandal resistant 0.5 gpm spray.	

Meets the American Disabilities Act Guidelines and **ANSI A117.1** Requirements for the physically challenged.

AVAILABLE MODIFICATIONS***	Parts Suffix**
Extra Long Handle	___LH

To modify a product, add suffix after the 4th digit (ex. 2064F05**101.002)
***Modified product models are **NOT** WaterSense certified.

© 2015 AS America, Inc.