CADET® PRO™ Chair Height Elongated Toilet

VITREOUS CHINA

BARRIER FREE

CADET® PRO™ RChair Height
Elongated Toilet

❑ **215AA.004**
- Features the **Cadet® Flushing System**
- Vitreous china
- Low consumption (6.0 Lpf/1.6 gpf) toilet
- Trade exclusive tank
- PowerWash® rim scrubs bowl with each flush
- Robust metal trip lever & metal shank fill valve
- Includes EZ-Install Tools w/color match bowl caps
- EverClean® surface included
- 3" flush valve
- Fully-glazed 2-1/8" trapway
- 16-1/2" rim height for accessible applications
- 12" (305mm) rough-in
- Generous 9" x 8" water surface area
- Chrome finish trip lever is supplied
- 1,000g MaP Score** at 1.6 gpf
- 5 year warranty

❑ **3517A.101** Chair Height Elongated Bowl
❑ **4188A.004** Tank

Nominal Dimensions:
767 x 441 x 771mm (30-1/8" x 17-3/8" x 30-3/8")

Fixture only, seat and supply sold separately

Alternative Tank Configuration Available:
❑ **4188A.054** Tank complete with Aquaguard Liner
❑ **4188A.064** Tank complete with tank cover locking device
❑ **4188A.074** Tank complete with Aquaguard Liner and tank cover locking device
❑ **4188A.005** Tank complete with trip lever located on right side
❑ **4188A.065** Tank complete with tank cover locking device and trip lever located on right side

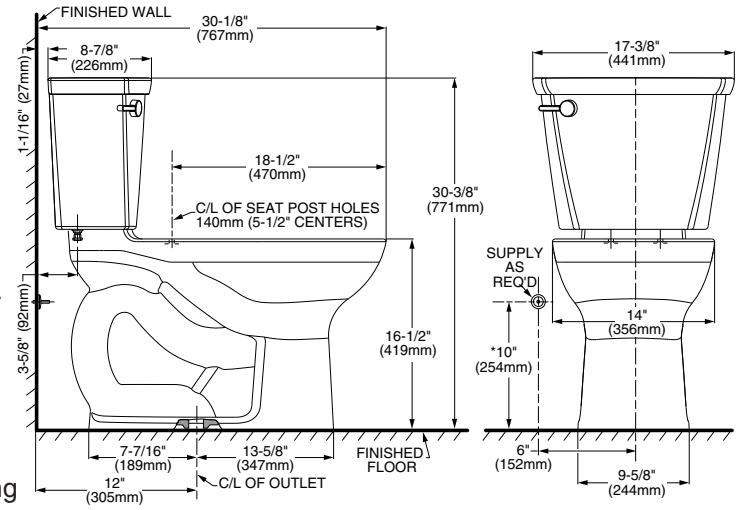

Compliance Certifications -
Meets or Exceeds the Following Specifications:
- ASME A112.19.2-2008/CSA B45.1-08 for Vitreous China Fixtures

NOTES:
THIS TOILET IS DESIGNED TO ROUGH-IN AT A MINIMUM DIMENSION OF 305MM (12") FROM FINISHED WALL TO C/L OF OUTLET.
SUPPLY NOT INCLUDED WITH FIXTURE AND MUST BE ORDERED SEPARATELY.
* DIMENSION SHOWN FOR LOCATION OF SUPPLY IS SUGGESTED.

IMPORTANT: Dimensions of fixtures are nominal and may vary within the range of tolerances established by ANSI Standard A112.19.2.
These measurements are subject to change or cancellation. No responsibility is assumed for use of superseded or voided pages.

** Maximum Performance (MaP) testing performed by IAPMO R&T Lab. MaP Report conducted by Gauley Associates Ltd. and Koeller and Company.

ADA **MEETS THE AMERICANS WITH DISABILITIES ACT GUIDELINES AND ICC ANSI A117.1 REQUIREMENTS FOR ACCESSIBLE AND USABLE BUILDING FACILITIES-CHECK LOCAL CODES.**

To Be Specified:
❑ Color: ❑ White ❑ Bone ❑ Linen ❑ Black
❑ Seat: #5321.110 EverClean® Elongated Seat with Slow Close Snap-Off Hinges
❑ Supply with stop:

Cadet® PRO™

© 2023 AS America Inc.

PART OF LIXIL