INSTALLATION INSTRUCTIONS
CARE AND MAINTENANCE

VorMax® Right Height® Elongated 2-piece Toilet Series 205AA / 238AA

IF INSTALLING VORMAX PLUS TOILET, PLEASE REFER TO INSTRUCTIONS INCLUDED WITH BOWL.

Thank you for selecting American Standard - the benchmark of fine quality for over 100 years. To ensure this product is installed properly, please read these instructions carefully before you begin. (Certain installations may require professional help.) Also be sure your installation conforms to local codes.

CAUTION: PRODUCT IS FRAGILE. TO AVOID BREAKAGE AND POSSIBLE INJURY HANDLE WITH CARE!
NOTE: *Pictures may not exactly define contour of china and components.*

BEFORE INSTALLING YOUR TOILET: please see your product spec page to verify the dimensions and water supply connections. Visit our website where you can search by Model number for the product spec page at: **http://www.americanstandard-us.com/**

TANK 4270A

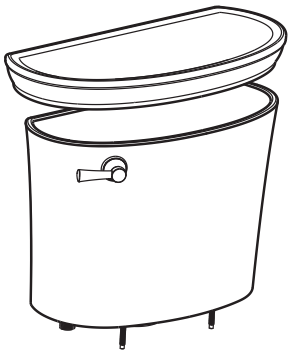

TANK 4385A

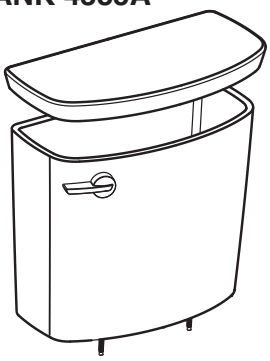

BOWL 3870A RIGHT HEIGHT® ELONGATED

BOWL 3385A RIGHT HEIGHT® ELONGATED

EZ-INSTALL KIT INCLUDED WITH TANK

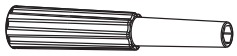

Attachment Handle

Nuts (3)

EZ-INSTALL INLET VALVE COUPLING KIT

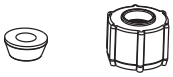

EZ-INSTALL KIT INCLUDED WITH BOWL

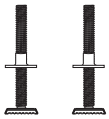

T-Bolts with Retainer (2)

Bolt Caps (2)

Bowl-To-Floor Knobs (2)

SOLD SEPARATELY

Water Supply Line

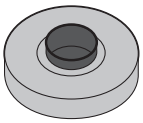

Wax Ring

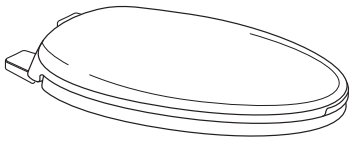

Toilet Seat

SAVE FOR FUTURE USE

Product names listed herein are trademarks of AS America, Inc.
© AS America, Inc. 2017

7302187-100C

7302187-100 Rev. C 8/17

Installation video can be found at: **http://www.americanstandard-us.com/vormaxtoilet**

Before You Start:

If Removing An Existing Toilet

Turn Off Water Supply

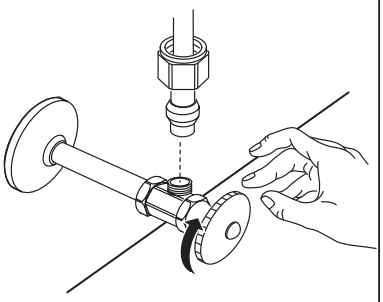

Flush to remove water from tank; sponge remaining water from bowl before removing toilet.

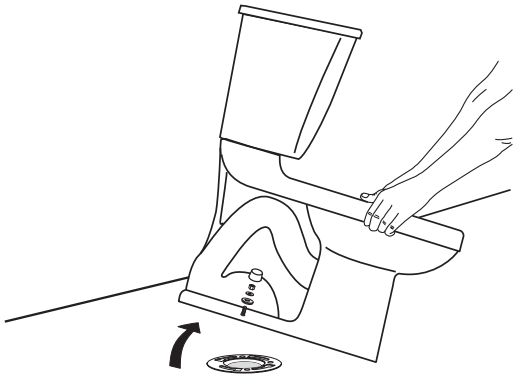

Clean Flange

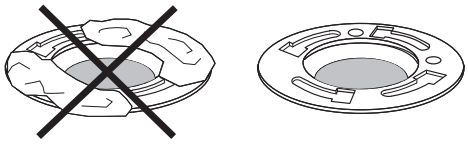

Caution: If leaving floor flange open for more than 1-2 hours, cover flange to prevent escaping sewer gases.

BACK-TO-BACK INSTALLATION

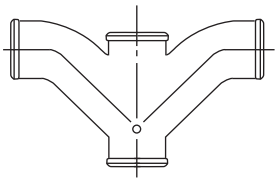

Recommended fitting type for back-to-back installations.

Depending upon your plumbing and venting conditions, the flow from the toilet in a back-to-back installation may create a vacuum on the system and draw water from the opposing bowl. The National Standards Plumbing Code prohibits the use of a cross fitting for drainage as throw over is possible. The code does approve a directional "Y" style fitting with proper venting to direct the water downward and away from the other toilet.

1

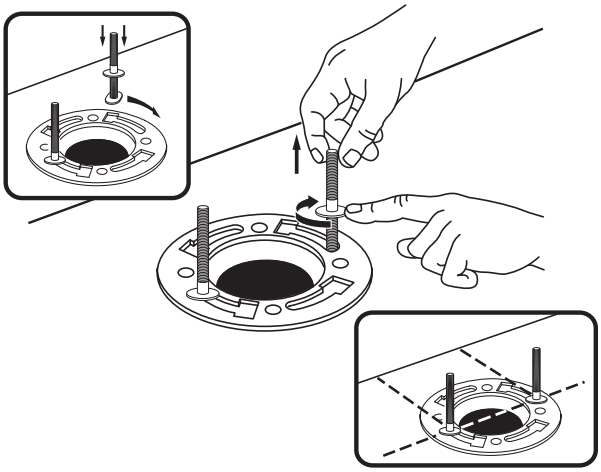

2 Press firmly.

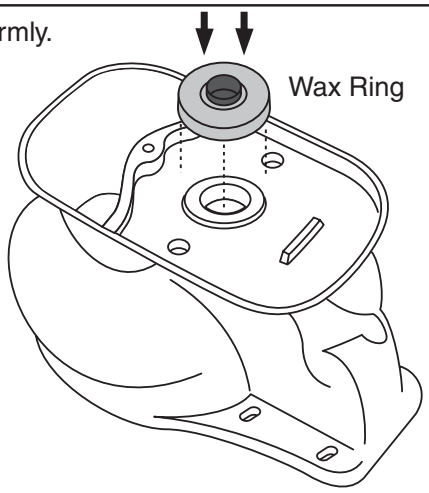

3

Apply weight evenly. Do not move after placement. Water tight seal may break.

4

Hand tighten only. Do not overtighten.

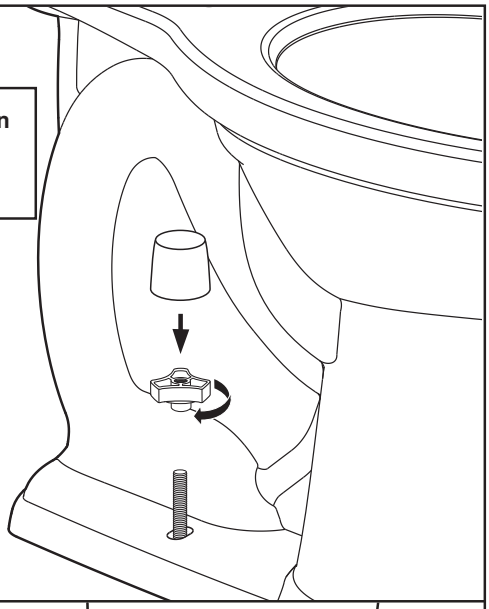

5

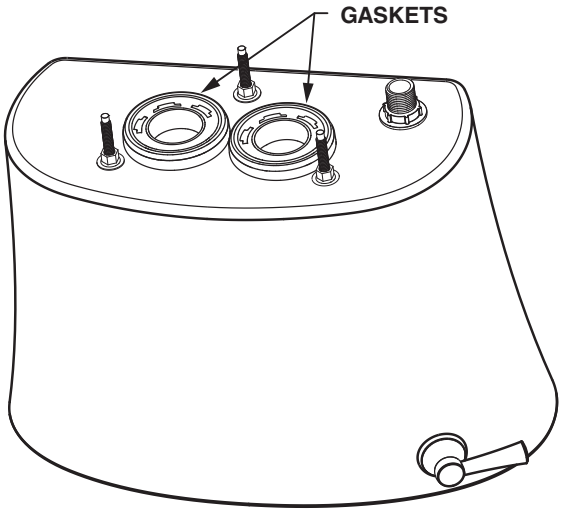

Confirm gaskets are fully seated on tank.

6

Tighten handles alternately until the tank contacts the front and back of the bowl achieving china-to-china contact.

NOTES:

a) To ease installation, push down on the top of the tank while tightening handles.

b) Tighten all three bolts adequately.

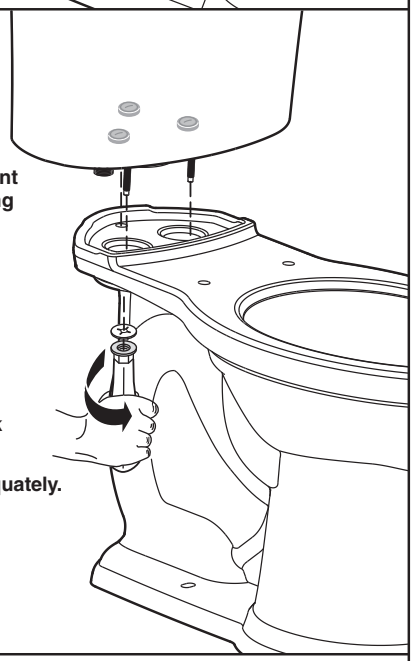

7

Ⓐ Connect water supply line. (Sold separately) Hand tighten nut.

Ⓑ Turn on water supply.

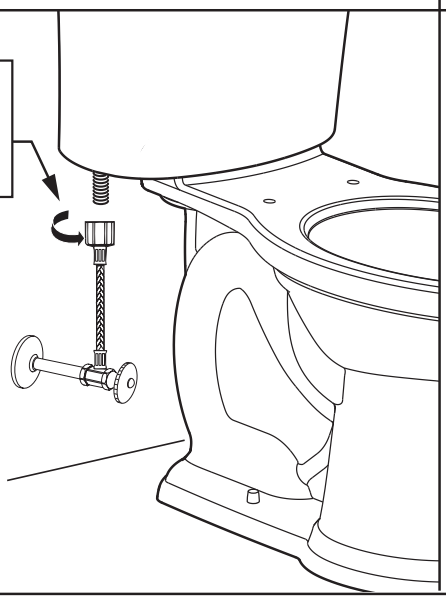

WARNING: Overtightening of water supply line nuts could result in breakage and potential flooding. If the connection leaks after hand tightening, replace the supply line. Do not use any type of sealant on the water supply connection. Use of plumber's putty, pipe dope, or any other type of sealant will void the warranty.

WARNING: Do not use plumber's putty, pipe dope, or any other sealant on the water supply connection to this tank. If the connection leaks after hand tightening, replace the supply line. If the connection continues to leak with the new supply line, replace the fill valve. ***Warranty is void if any type of sealant is used on the water supply connection.***

8

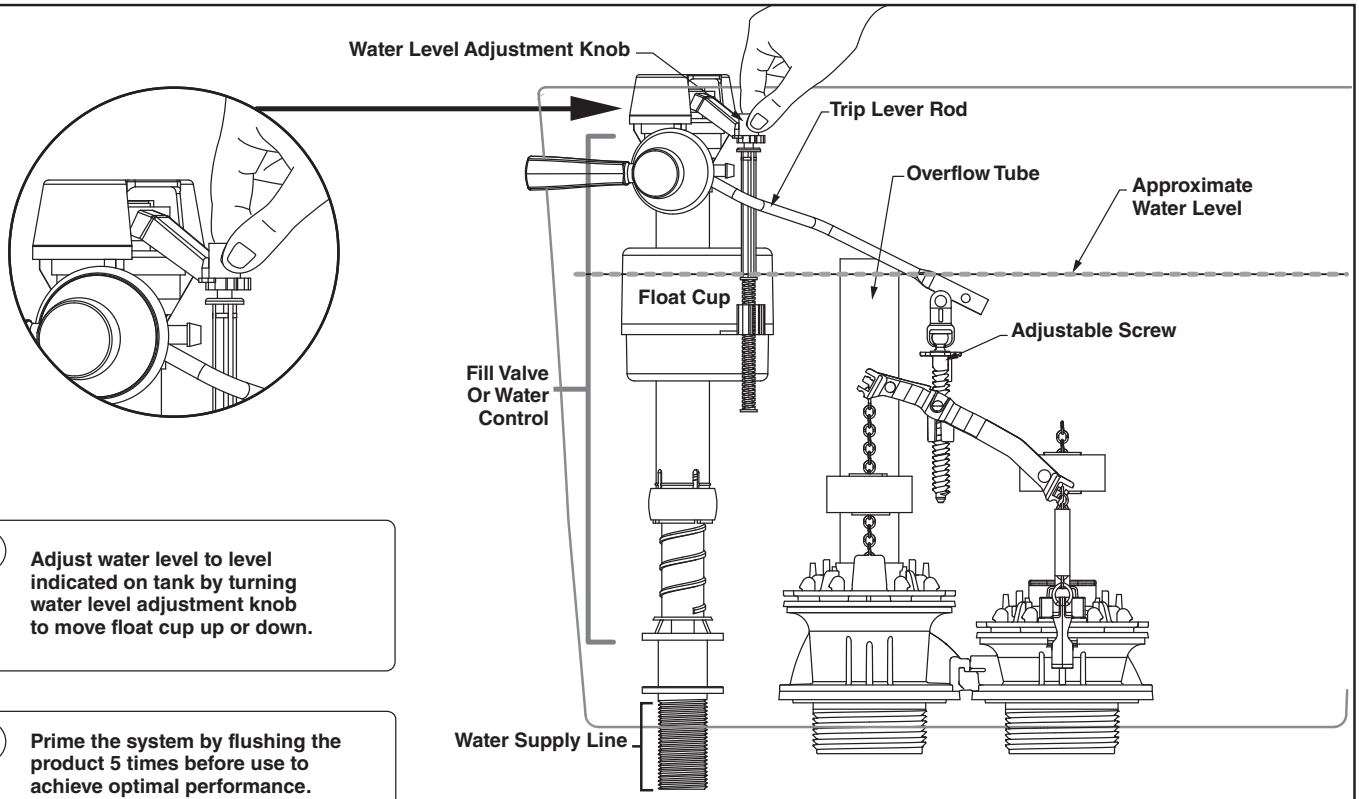

A **Adjust water level to level indicated on tank by turning water level adjustment knob to move float cup up or down.**

B **Prime the system by flushing the product 5 times before use to achieve optimal performance.**

C **PROPER FLUSHING METHOD:**
Be sure to fully depress the trip lever on each flush. Do not hold the trip lever down for extended periods of time as this could allow air to enter the system which will slightly degrade performance for a few flushes.

9 VERIFY ADJUSTABLE SCREW SETUP

1. Depress trip lever handle all the way **(A)**.
2. Adjust screw on the teeter bar **(B)** so rear frame **(C)** touches the frame stop **(D)**.
3. Return trip lever handle **(A)** to rest position.
4. Make sure hook **(E)** is fully engaged under tab on valve body **(F)**, if not, slightly adjust screw to make sure hook is engaged.

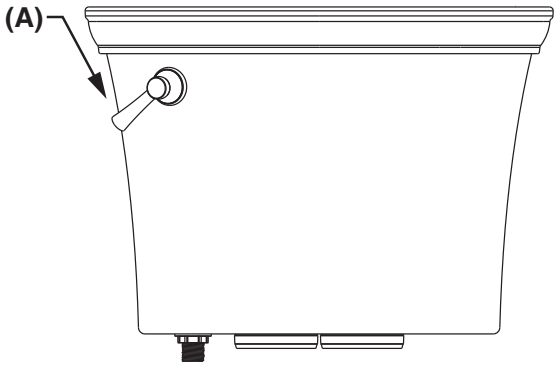

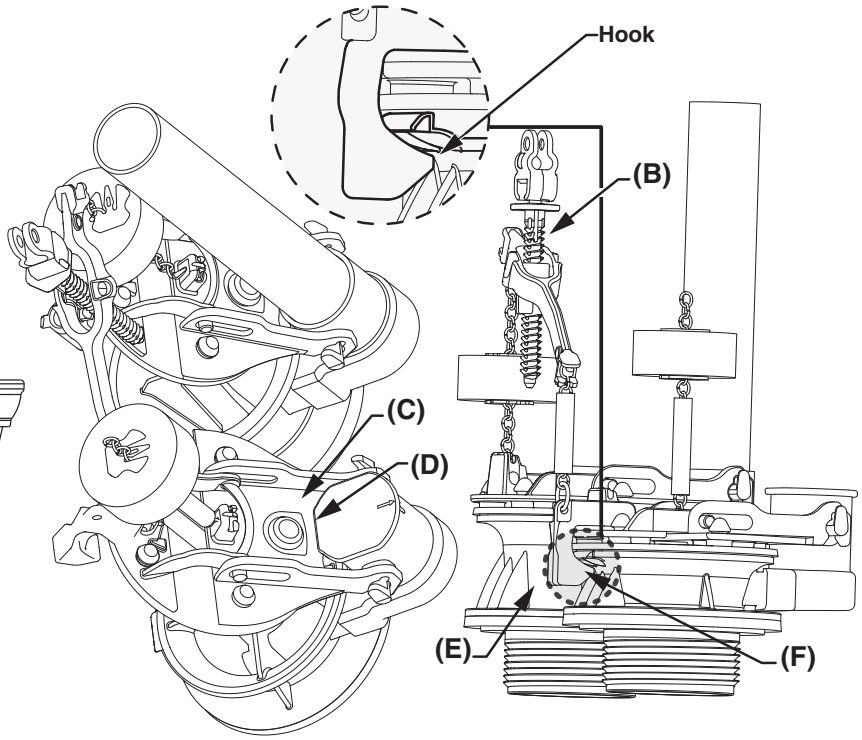

- **IMPORTANT:** American Standard does not recommend that the tank components be switched out with anything other than the furnished specified components as the performance could be affected. Any alterations made using anything other than the specified components could negatively impact the flush performance and will void the warranty.

TROUBLESHOOTING GUIDE - See Step 8-9 For Diagram

Problem	Possible Cause	Corrective Action
Does not flush	a. Water supply valve closed. b. Supply line blocked. c. Flush valve chain too loose or disconnected. d. Sand or debris lodged in water control.	a. Open valve and allow water to fill tank. b. Shut off water supply, disconnect supply line and inspect all gaskets and washers. Reassemble. c. Readjust chain length as required. d. Shut off water supply. Remove cap and clean as per Fluidmaster maintenance instructions at: www.americanstandard-us.com/enews/fluidmasterguide.pdf
Poor or sluggish flush	a. Bowl water level too low. b. Supply valve partly closed. c. Partially clogged trapway and/or drain pipe and/or vent. d. Supply pressure too low. e. Tank not installed tightly on bowl. f. Product has air stuck in waterways. g. Incorrect tank water level h. Trip lever not opening jet flapper to stop i. Air leak j. Trip lever not returning to original position k. Loss of prime due to depressing on the trip lever too long	a. Check that refill tube is connected to water control and inserted into overflow tube without being kinked or damaged. b. Open supply valve fully. Be sure that proper supply tube size is used. c. Remove obstruction. Consult a plumber if necessary. d. Normal supply pressure must be at least 20 psi. e. Tighten bolts as shown in Step 6 to make sure the tank is touching the piers of the bowl in the front and back of the product. f. Re-prime bowl by flushing 5 times in a row allowing the tank to refill each time to achieve optimal performance. g. Check water level in tank to make sure it is at the correct height listed inside the tank. Re-prime bowl by flushing 5 times in a row allowing the tank to refill each time to achieve optimal performance. h. Adjust settings according to adjustable screw setup in Step 9 i. Reseat tank by shutting off water supply, disconnect supply line, remove tank mounting nuts, inspect all gaskets and reassemble j. Adjust trip lever nut by loosening the nut a quarter turn at a time clockwise (reverse thread) k. Do not depress trip lever longer than 2 seconds for optimal performance. Depressing trip lever longer will negatively affect the toilet performance by causing a loss of prime. Re-prime bowl by flushing 5 times in a row allowing the tank to refill each time to achieve optimal performance.
Toilet leaks	a. Poor supply line connection. b. Poor bowl to tank/floor connection. c. Cracked Bowl d. Loose tank nuts e. Loose flush valve mounting nuts f. Tank to Bowl gaskets defective g. Black rim flapper leaking. Inlet valve will periodically run and you will see water coming from port in to the bowl h. Red jet flapper leaking. Inlet valve will periodically run	a. Review Step 8 of installation procedure. b. Review Step 1 through 6 of installation procedure. c. Send new bowl / return d. Tighten nuts, reinstall e. Tighten nuts, reinstall f. Replace gaskets g. Clean debris from seal surface. Replace flapper seal as needed and adjust settings according to adjustable screw setup in Step 9. h. Clean debris from seal surface. Replace flapper seal as needed and adjust settings according to adjustable screw setup in Step 9.
Toilet does not shut off	a. Flapper seal leaking or deformed. b. Sand or debris lodged in water control. c. Flush valve chain too tight, holding flapper open.	a. Clean debris from seal surface. Replace flapper seal as needed. See web for more info. b. Shut off water supply. Remove cap and clean as per Fluidmaster maintenance instructions at: www.americanstandard-us.com/enews/fluidmasterguide.pdf c. Adjust settings according to adjustable screw setup in Step 9.
Toilet bowl rocks after installation	a. Wax ring not fully compressed. b. Floor not level.	a. Retighten bowl-to-floor knobs. b. Use toilet shims and /or place a bead of caulk around the base of the toilet.

PARTS LIST CAN ALSO BE FOUND UNDER THE TANK LID.

CARE AND CLEANING

When cleaning your toilet, wash it with mild, soapy water, rinse thoroughly with clear water and dry with a soft cloth.

WARNING: Do not use in-tank cleaners. These products can seriously corrode fittings in the tank. This damage can cause leakage and property damage. American Standard shall not be responsible or liable for any damage caused by the use of in-tank cleaners.

In the United States:
American Standard Brands
1 Centennial Ave.
Piscataway, New Jersey 08854
Attention: Director of Customer Care
For residents of the United States, warranty information may also be obtained by calling the following toll free number: (800) 442-1902
www.americanstandard.com

In Canada:
AS Canada, ULC
5900 Avebury Rd.
Mississauga, Ontario
Canada L5R 3M3
Toll Free: (800) 387-0369
www.americanstandard.ca

In Mexico:
American Standard B&K Mexico
S. de R.L. de C.V.
Via Morelos #330
Col. Santa Clara
Ecatepec 55540 Edo. Mexico
Toll Free: 01-800-839-1200
www.americanstandard.com.mx

PART OF LIXIL