INSTALLATION INSTRUCTIONS

HET *High Efficiency (1.28gpf/4.8Lpf)*

American Standard

PRIOLO FLOOR MOUNT BACK OUTLET ADA FLUSHOMETER ONE PIECE TOILET

Model 3695, 3696, 3697

Thank you for selecting American Standard – the benchmark of fine quality for over 100 years. To ensure this product is installed properly, please read these instructions carefully before you begin. (Certain installations may require professional help.) Also be sure your installation conforms to local codes.

⚠ CAUTION: PRODUCT IS FRAGILE. TWO PEOPLE ARE RECOMMENDED FOR HANDLING TO AVOID BREAKAGE AND POSSIBLE INJURY!

NOTE: ***Pictures may not exactly define contour of china and components.***

NOTE: ***For proper operation these products require a minimum of 30 psi line pressure.***

RECOMMENDED TOOLS AND MATERIALS

Putty Knife	Regular Screwdriver	Adjustable Wrench	Sealant	Tape Measure
Hacksaw	Carpenters Level	Flexible Supply Tube	Closet Bolts	

SAVE FOR FUTURE USE

1 REMOVE OLD TOILET

a. Close flush valve completely.
b. NOTE: *If replacing valve, first shut off main water supply!*
c. Remove old mounting hardware, remove toilet and plug wall waste opening to prevent escaping sewer gases.
d. Remove closet bolts from flange and clean away old wax, putty, etc. base area.
NOTE: *Mounting surface must be clean and perpendicular to the floor* ***before*** *new toilet is installed!*

2

PRIOLO 3695/3696 16-1/2" TOP SPUD

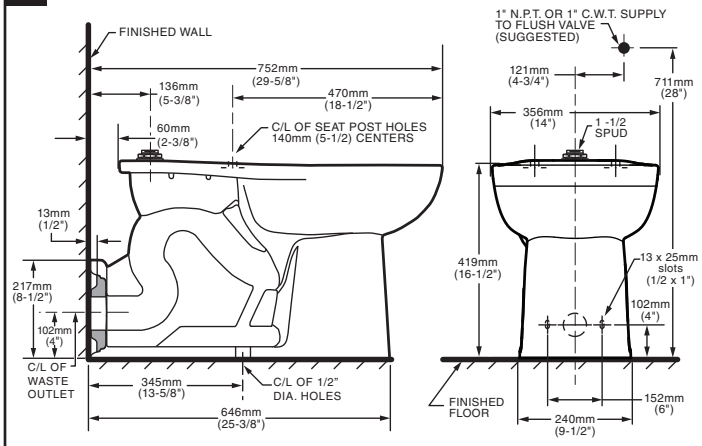

PRIOLO 3697 16-1/2" BACK SPUD

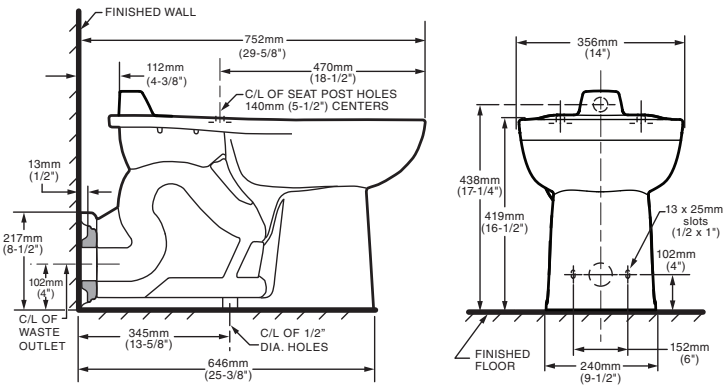

DIMENSIONS (Nominal) NOTE: *Distance from floor to closet flange centerline (rough-in) must be 4" (102 mm) with flange surface flush to 1/16" (1.6mm) max. beyond finished wall.*

3 INSTALL CLOSET BOLTS

Install closet bolts in flange channel, turn 90°, and slide into place 6" (152 mm) apart and parallel to floor. (Use putty to hold bolts in place if necessary.) Brace under flooring as needed and drill two mounting pilot holes as shown.

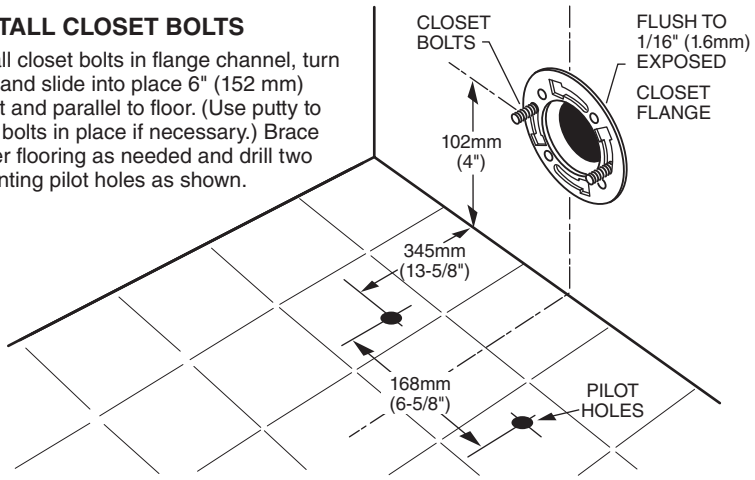

4

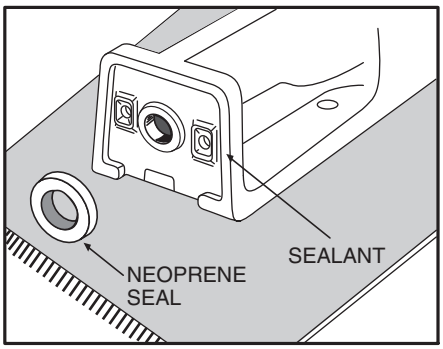

INSTALL NEOPRENE OR GRAPHITE FELT SEAL*
Install seal evenly around waste flange (horn).
Apply a thin bead of sealant around base flange.
***NOTE:** Wax seal not recommended for this application.

Product names listed herein are trademarks of AS America, Inc.
© AS America, Inc. 2015

5

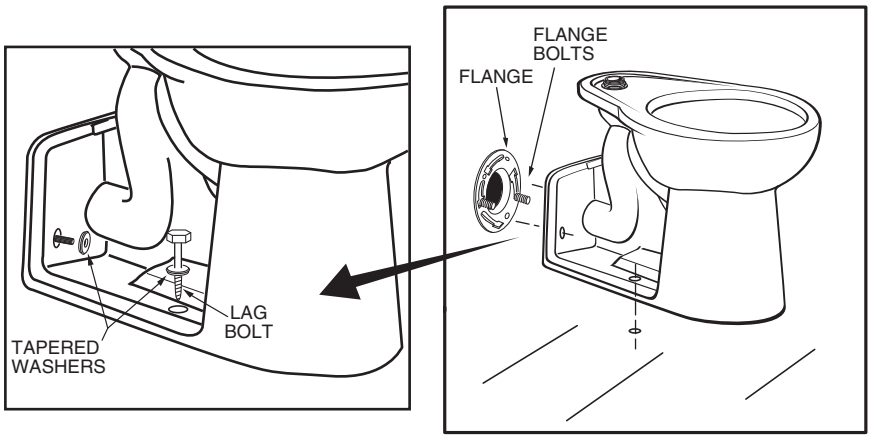

INSTALL TOILET ON FLANGE

a. Unplug wall waste opening and slide toilet towards closet flange so bolts project through mounting holes.

b. Loosely install retainer tapered washers and nuts. Side of washers marked "THIS SIDE UP" *must* face you!

6

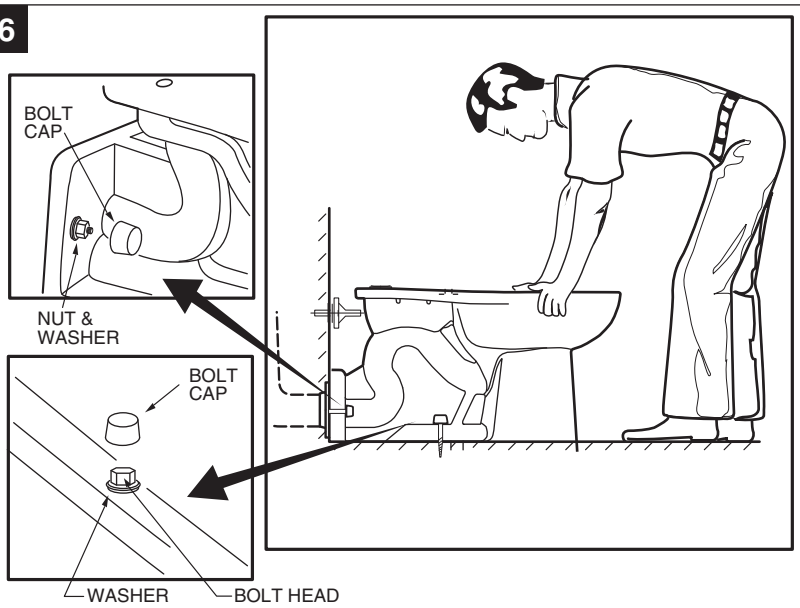

INSTALL TOILET

a. Position toilet squarely to wall and, with a rocking motion, push bowl against ring and flange. Alternately tighten nuts until toilet is firmly anchored.

⚠ **CAUTION:** DO NOT OVERTIGHTEN NUTS OR BASE MAY BE DAMAGED!

b. Insert the tapered washers (supplied in the kit) into the lag bolts (not supplied). Insert bolts through mounting holes and tighten into pre-drilled floor openings.

c. Install the bolt caps on tapered washers. (If necessary, cut wall bolt length to size before installing caps.)

d. Smooth off the bead of sealant around base. Remove excess sealant.

7 **INSTALL TOILET SEAT** Install toilet seat in accordance with manufacturer's directions.

8 **CARE AND CLEANING**

When cleaning your toilet, wash it with mild, soapy water, rinse thoroughly with clear water and dry with a soft cloth. Avoid detergents, disinfectants, or cleaning products in aerosol cans. NEVER use abrasive scouring powders or abrasive pads on your toilet seat. Some bathroom chemicals and cosmetics may damage the seat's finish.

AS AMERICA, INC. ONE-YEAR LIMITED WARRANTY

If inspection of this AS America, Inc. (“American Standard”) plumbing product, within one year after its initial purchase, confirms that it is defective in materials or workmanship, American Standard will repair or, at its option, exchange the product for a similar model.

This warranty **does not apply** to local building code compliance. Since local building codes vary considerably, the purchaser of this product should check with a local building or plumbing contractor to insure local code compliance before installation.

This warranty **shall be void** if the product has been moved from its initial place of installation; if it has been subjected to faulty maintenance, abuse, misuse, accident or other damage; if it was not installed in accordance with American Standard's instructions; or if it has been modified in a manner inconsistent with the product as shipped by American Standard.

American Standard's option to repair or exchange the product under this warranty does not cover any labor or other costs of removal or installation, **nor shall American Standard be responsible for any other incidental or consequential damages attributable to a product defect or to the repair or exchange of a defective product, all of which are expressly excluded from this warranty.** (Some states or provinces do not allow the exclusion or limitation of implied warranties, so this exclusion may not apply to you.)

This warranty gives you specific legal rights. You may have other statutory rights that vary from state to state or from province to province, in which case this warranty does not affect such statutory rights.

For service under this warranty, it is suggested that a claim be made through the contractor or dealer from or through whom the product was purchased, or that a service request (including a description of the product model and of the defect) be sent to the following address:

In the United States:
American Standard Inc.
P.O. Box 6820
Piscataway, New Jersey 08855
Attention: Director of Consumer Affairs
For residents of the United States, warranty information may also be obtained by calling the following toll free number: (800) 442-1902
www.americanstandard-us.com

In Canada:
American Standard
5900 Avebury Road
Mississauga, Ontario
Canada L5R 3M3
Toll Free: (800) 387-0369
www.americanstandard.ca

In Mexico:
Customer Service Manager
Ideal Standard, S.A. de C.V.
Via Morelos #330
Col. Santa Clara
Ecatepec 55540 Edo. Mexico
www.americanstandard.com.mx