HERITAGE® VORMAX® RIGHT HEIGHT® ELONGATED TOILET

BARRIER FREE

VITREOUS CHINA

HERITAGE® VORMAX® RIGHT HEIGHT® ELONGATED TOILET

- ❑ **205AA.104**
  - **VorMax flushing technology cleans two times better than conventional toilets∆**
  - CleanCurve™ rim eliminates rim area where dirt and buildup hide
  - Vitreous china
  - HET (High Efficiency Toilet) ultra-low consumption 1.28 gpf/4.8 Lpf, utilizes 20% less water
  - Meets EPA WaterSense® criteria
  - Elongated siphon action jetted bowl
  - 16-1/2" rim height for accessible applications
  - Fully glazed 2-1/16" trapway
  - Dual injection flush valves
  - Classic traditional styling on bowl and tank
  - EverClean® surface included
  - Chrome trip lever
  - Includes EZ-Install tools with color matched bowl caps
  - 10 year warranty
  - Best 1,000g MaP Score** at 1.28 gpf
  - **Coordinates with Retrospect® Suite of fixtures**
  - **Exclusive to independent wholesalers only**
- ❑ **3870A.101** Right Height® Bowl
- ❑ **4270A.104** HET Tank

Nominal Dimensions:
30-1/4" x 19-3/4" x 30-13/16"
(768 x 501 x 782mm)

Fixture only, seat and supply by others

Compliance Certifications -
Meets or Exceeds the Following Specifications:
- ASME A112.19.2/CSA B45.1-08 for Vitreous China Fixtures
- US EPA WaterSense® Specification for HETs

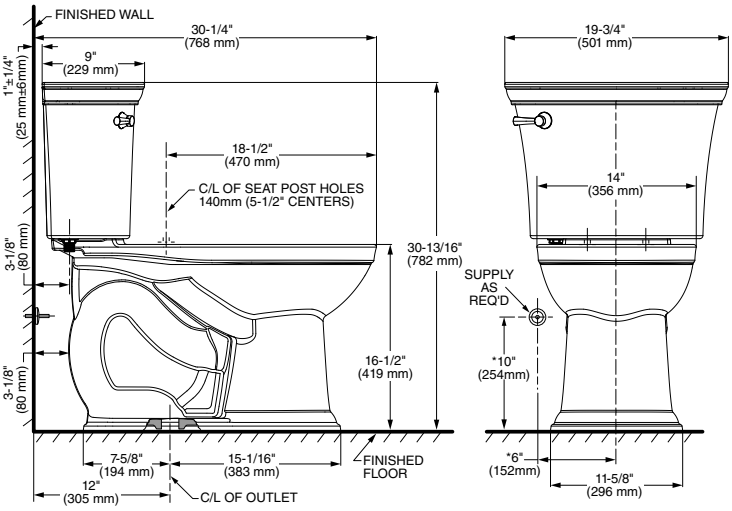

To Be Specified:
- ❑ Color: ❑ White ❑ Linen
- ❑ Supply with Stop:
- ❑ Seat: **5020A.65G** Preferred Seat: Traditional Elongated Luxury Seat
  Alternatate Seat: 5350.110

NOTES:
THIS COMBINATION IS DESIGNED TO ROUGH-IN AT A MINIMUM DIMENSION OF 305MM (12") FROM FINISHED WALL TO C/L OF OUTLET.
* DIMENSIONS SHOWN FOR LOCATION OF SUPPLY ARE SUGGESTED. SUPPLY NOT INCLUDED WITH FIXTURE AND MUST BE ORDERED SEPARATELY.

IMPORTANT: Dimensions of fixtures are nominal and may vary within the range of tolerance established by ANSI Standard A112.19.2.
These measurements are subject to change or cancellation. No responsibility is assumed for use of superseded or voided pages.

∆ **Source:** Test Report No. 109-141486-002, comparing VorMax® against conventional under-the-rim-water-dispersal toilets from major retailers.

** Maximum Performance (MaP) testing performed by IAPMO R&T Lab. MaP Report conducted by Gauley Associates Ltd. and Koeller and Company.

EVERCLEAN® | EPA WATERSENSE® CERTIFIED | WATER EFFICIENT

MEETS THE AMERICANS WITH DISABILITIES ACT GUIDELINES AND ICC ANSI A117.1 REQUIREMENTS FOR ACCESSIBLE AND USABLE BUILDING FACILITIES-CHECK LOCAL CODES.

© 2018 AS America Inc.

PART OF LIXIL