# RELIANT® 3
## SINGLE CONTROL LAVATORY FAUCET

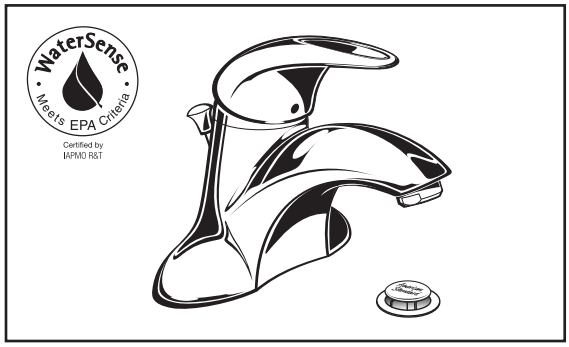


## MODEL NUMBER:

- ❑ **7385.000 Reliant 3 Single Control Centerset**
  Metal Speed Connect® pop-up drain. Metal lever handle.
- ❑ **7385.003 Reliant 3 Single Control Centerset**
  Indexed metal lever handle. Grid drain. LESS pop-up hole.
- ❑ **7385.004 Reliant 3 Single Control Centerset**
  Indexed metal lever handle. LESS drain & pop-up hole.
- ❑ **7385.007 Reliant 3 Single Control Centerset**
  Indexed metal lever handle. LESS drain & pop-up rod. With pop-up hole.
- ❑ **7385.008 Reliant 3 Single Control Centerset**
  Indexed metal lever handle. Metal Speed Connect pop-up drain.

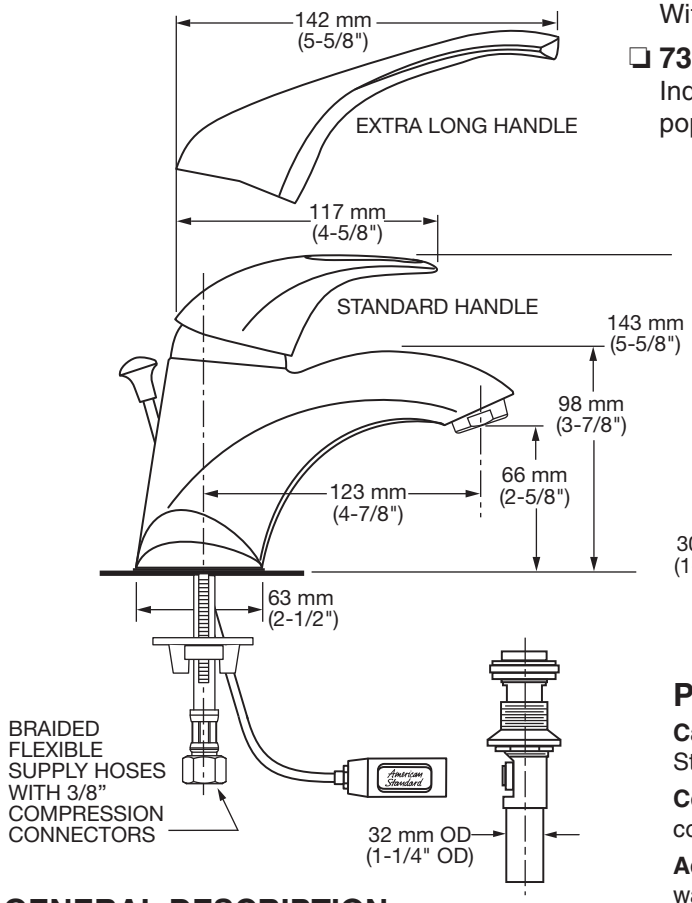


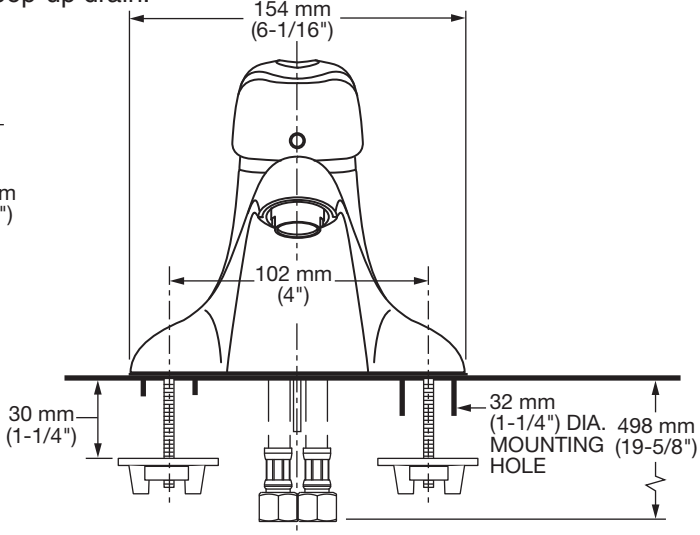


## GENERAL DESCRIPTION:

All metal body with choice of metal lever, indexed metal lever handle or optional extra long lever handle. Washerless 47 mm ceramic disc valve cartridge with integral hot limit safety stop. Durable cast brass waterway. Braided flexible supply hoses with 3/8" compression connections. 20" (500 mm) long flexible stainless steel drain cable is pre-assembled to faucet body. Metal Speed Connect® drain body (on 7385.000 & 7385.008) with 1-1/4" (32 mm) tail piece. 1.2 gpm/4.5 L/min. maximum flow rate.

## PRODUCT FEATURES:

**Cast Brass Waterway with Flexible Supply Hoses:** Strong and durable. Less potential for leaks.

**Ceramic Disc Valve Cartridge:** Assures smooth, precise valve control and a lifetime of drip-free, maintenance-free performance.

**Adjustable Hot Limit Safety Stop:** Limits the amount of hot water allowed to mix with cold. Reduces the risk of accidental scalding.

**Exclusive Speed Connect Metal Drain:**
- Fewer parts. Installs in less time.
- No adjustments required - seals the first time, every time.
- Flexible stainless steel cable - installs effortlessly in tight spaces.

**Lead Free:** Faucet contains ≤ 0.25% total lead content by weighted average.

**Simple One-Person Installation:** Faucet drops in from top. Quick spin nuts secure faucet in place.

## SUGGESTED SPECIFICATION

Single control lavatory fitting shall feature an all metal body with metal lever handle. Shall feature a cast brass waterway with flexible hose connections. Shall also feature a washerless ceramic disc valve cartridge with integral hot limit safety stop. Shall also feature a metal drain body with stainless steel cable actuation. Fitting shall be American Standard Model # 7385.___.___.

© 2019 AS America, Inc.

# RELIANT® 3
## SINGLE CONTROL LAVATORY FAUCET

## CODES AND STANDARDS

These products meet or exceed the following codes and standards:

**ANSI A117.1**
**ASME A112.18.1**
**NSF 61/Section 9 and Annex G**
**CSA B125.1**

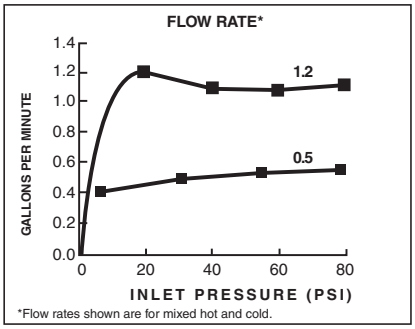

*Flow rates shown are for mixed hot and cold.

| Product Number | Description | Finish Options: Polished Chrome 002 | Finish Options: PVD Brushed Nickel 295 |
|---|---|---|---|
| 7385.000 | Reliant 3 Single Control Centerset. Metal lever handle. Metal Speed Connect® pop-up drain. | | |
| 7385.003 | Reliant 3 Single Control Centerset. Indexed (Red/Blue) metal lever handle. Grid drain. LESS pop-up hole. | | N/A |
| 7385.004 | Reliant 3 Single Control Centerset. Indexed (Red/Blue) metal lever handle. LESS drain. LESS pop-up hole. | | |
| 7385.007 | Reliant 3 Single Control Centerset. Indexed (Red/Blue) metal lever handle. LESS drain and pop-up rod. With pop-up hole. | | N/A |
| 7385.008 | Reliant 3 Single Control Centerset. Indexed (Red/Blue) metal lever handle. Metal Speed Connect pop-up drain. | | |

ADA Meets the American Disabilities Act Guidelines and **ANSI A117.1** Requirements for the physically challenged.

*PCA — Pressure Compensating
**To modify a product, add suffix after the 4th digit (ex. 2064**F05**101.002)
***Modified product models are **NOT** WaterSense certified.

| | | 7385.000 | 7385.003 | 7385.004 | 7385.007 | 7385.008 |
|---|---|---|---|---|---|---|
| | | • Metal Lever Handle • **Speed Connect® metal drain** | • Indexed (Red/Blue) metal lever handle • LESS drain, LESS pop-up hole | • Indexed (Red/Blue) metal lever handle • LESS drain, LESS pop-up hole | • Indexed (Red/Blue) metal lever handle • LESS drain, LESS pop-up rod • With pop-up hole | • Indexed (Red/Blue) metal lever handle • **Speed Connect metal drain** |
| **AERATOR MODIFICATIONS*** | | **Parts Suffix**** | **Parts Suffix**** | **Parts Suffix**** | **Parts Suffix**** | **Parts Suffix**** |
| Drain Options | LESS pop-up drain; with hole and pop-up rod | **__XPR** | ____ | ____ | ____ | **__XPR** |
| Handle Options | Extra long handle | **__LH** | **__LH** | **__LH** | **__LH** | **__LH** |
| Flow Control Options | Vandal-Resistant 0.35 gpm/1.3 L/min. PCA* Multi-Laminar Spray | __ | __ | **__V035** | __ | __ |
| | Vandal-Resistant 0.5 gpm/1.9 L/min. PCA* Multi-Laminar Spray | **__V05** | **__V05** | **7385.050** | **__V05** | **__V05** |
| | Vandal-Resistant 1.0 gpm (3.8 L/min.) PCA* Aerator | **__V10** | **__V10** | **__V10** | **__V10** | **__V10** |
| | Vandal-Resistant 1.2 gpm (4.5 L/min.) PCA* Aerator | **__V12** | **__V12** | **__V12** | **__V12** | **__V12** |
| | Vandal-Resistant 1.5 gpm/5.7 L/min. PCA* Aerator | **__V15** | **__V15** | **__V15** | **__V15** | **__V15** |
| | Non-Aerated Laminar Flow Outlet 1.5 gpm/5.7 L/min. PCA* | **__L15** | **__L15** | **__L15** | **__L15** | **__L15** |

PART OF LIXIL

© 2019 AS America, Inc.