Table of Contents

Congratulations on purchasing your new Hunter® ceiling fan! It will provide comfort and performance in your home or office for many years. This installation and operation manual contains complete instructions for installing and operating your fan.

We are proud of our work and appreciate the opportunity to supply you with the best ceiling fan available anywhere in the world.

To register your fan, please visit:
www.HunterFan.com/register

Save your receipt for proof of purchase.

What to Expect with Your Installation

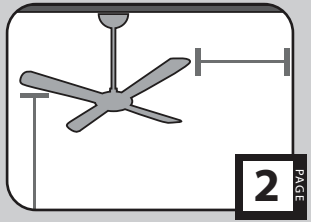

2 PAGE

Tools Needed

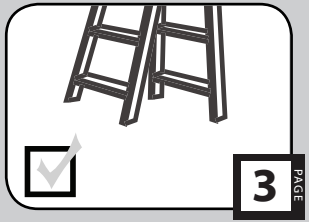

3 PAGE

Ceiling Bracket

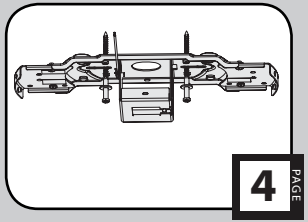

4 PAGE

Preparation

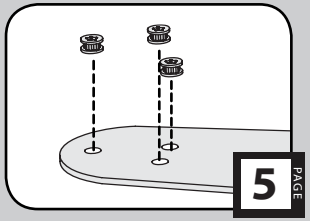

5 PAGE

Hanging the Fan

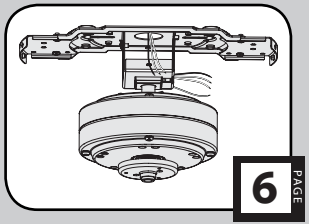

6 PAGE

Wiring

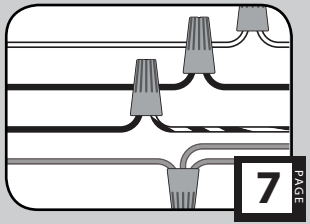

7 PAGE

Motor Housing

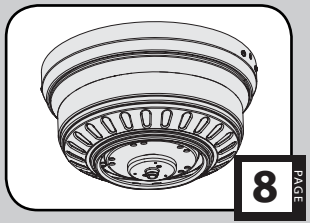

8 PAGE

Blades

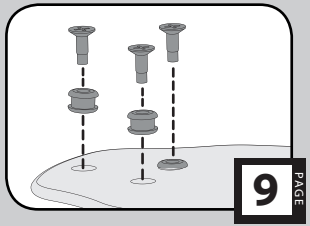

9 PAGE

Switch Housing

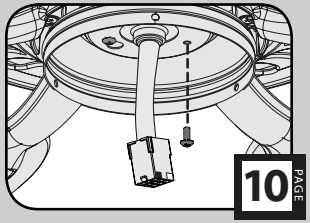

10 PAGE

Light Kit

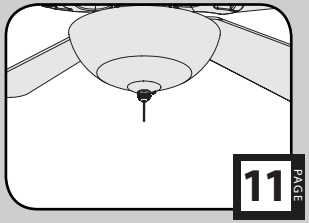

11 PAGE

Maintenance, Operation & Cleaning

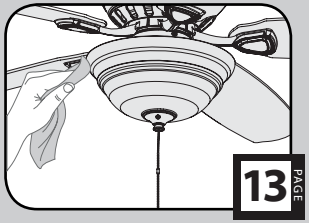

13 PAGE

Troubleshooting

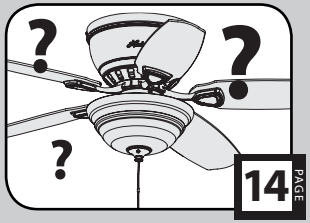

14 PAGE

M0105-01 • 09/15/15 • © 2015 Hunter Fan Company

What to Expect with Your Installation

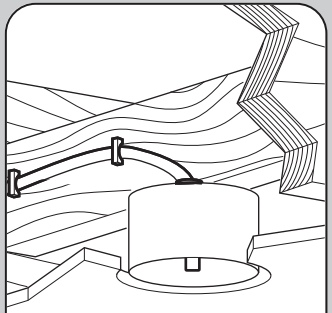

Must be able to secure the fan to building structure or fan-rated outlet box

If you are unfamiliar with wiring, use a qualified electrician.

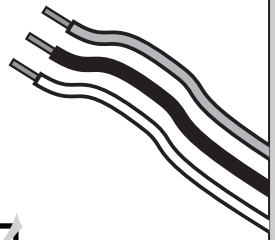

Know your wiring

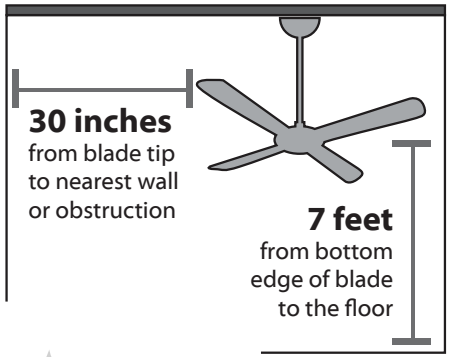

Assess location

You may need a friend to help you.

Check box to see fan weight

Read and Save These Instructions

This product conforms to UL Standard 507.

⚠ WARNINGS

w.1 - To reduce the risk of fire, electrical shock, or personal injury, mount fan directly from building structure and/or an outlet box marked acceptable for fan support of 70 lbs (31.8 kg) and use the mounting screws provided with the outlet box.

w.2 - To avoid possible electrical shock, before installing or servicing your fan, disconnect the power by turning off the circuit breakers to the outlet box and associated wall switch location. If you cannot lock the circuit breakers in the off position, securely fasten a prominent warning device, such as a tag, to the service panel.

w.3 - To reduce the risk of fire, electrical shock, or motor damage, use only Hunter Solid State Speed Controls.

w.4 - To reduce the risk of personal injury, do not bend the blade brackets when installing the blade brackets, balancing the blades, or cleaning the fan. Do not insert foreign objects in between rotating fan blades.

⚠ CAUTIONS

c.1 - All wiring must be in accordance with national and local electrical codes ANSI/NFPA 70. If you are unfamiliar with wiring, use a qualified electrician.

c.2 - Use only Hunter replacement parts.

M0105-01 • 09/15/15 • © 2015 Hunter Fan Company

Tools Needed

☑ Ladder

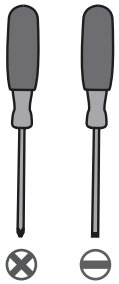

☑ Screwdrivers

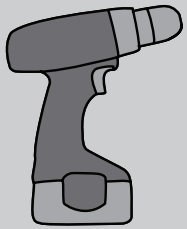

☐ Power Drill (optional)

☐ 9/64" Drill Bit (optional)

If mounting to a support structure, you will also need these tools.

M0105-01 • 09/15/15 • © 2015 Hunter Fan Company

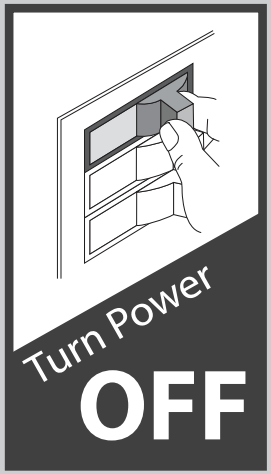

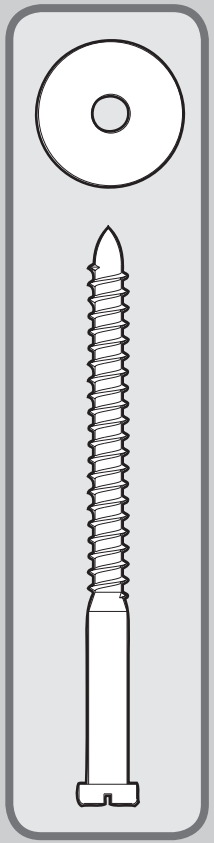

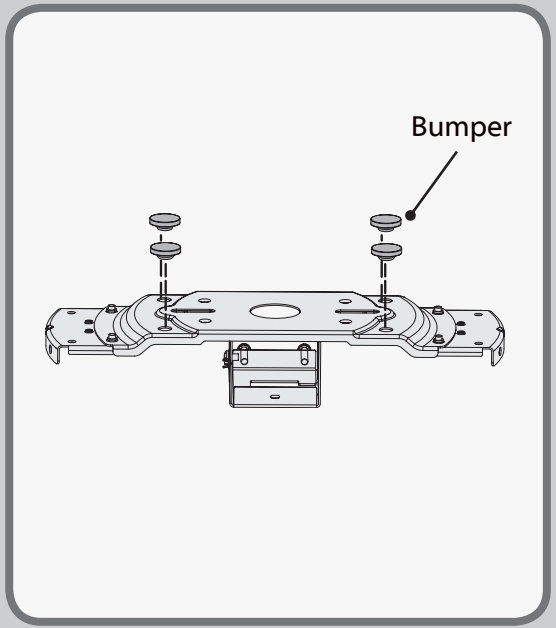

Make sure all four bumpers are still attached.

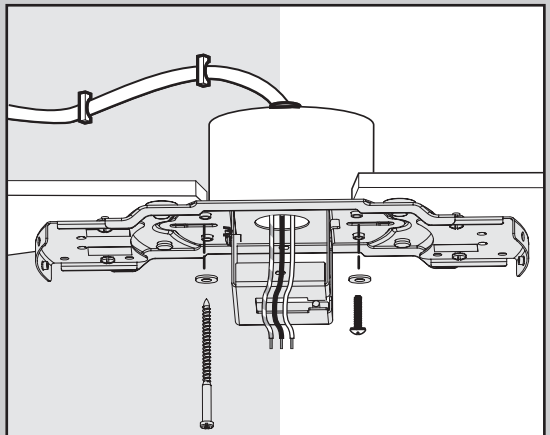

Use wood screws (included) when securing to support structure with approved electrical outlet box. Drill 9/64" pilot holes in support structure to aid in securing ceiling bracket with hardware found in the ★ hardware bag.

Use machine screws (provided with outlet box) when securing to existing ceiling fan-rated outlet box. Make sure it is securely installed and is acceptable for fan support of 31.8 kg (70 lbs) or less.

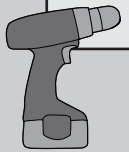

To avoid possible electrical shock, before installing your fan, disconnect the power by turning off the circuit breakers to the outlet box associated with the wall switch location.

Refer to warning w.1 on pg. 2

M0105-01 • 09/15/15 • © 2015 Hunter Fan Company

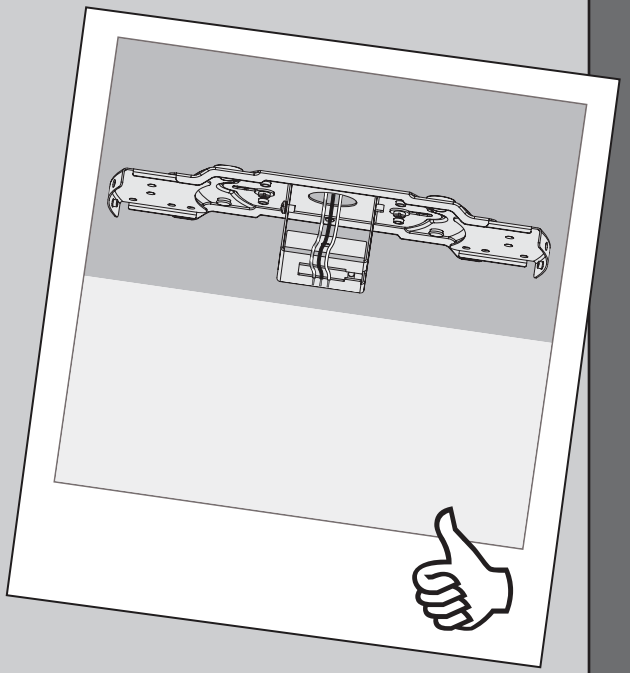

Preparation

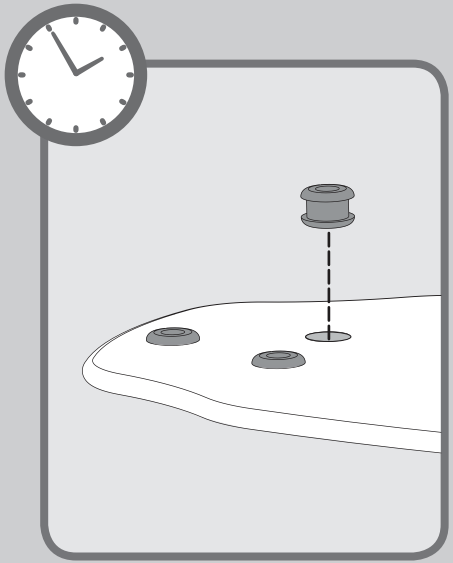

Time Saver Tip: Get a helper to insert grommets, found in the ■ hardware bag, into the blades while you're doing the next couple of steps.

M0105-01 • 09/15/15 • © 2015 Hunter Fan Company

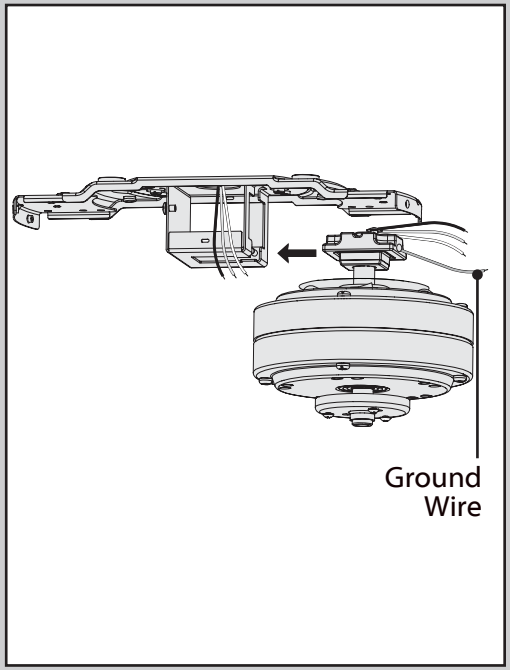

While holding the wires out of the way, lift the motor assembly and place the square hanger into the opening in the ceiling bracket. Be sure the ground wire attached to the hanger faces out of the large opening in the ceiling bracket.

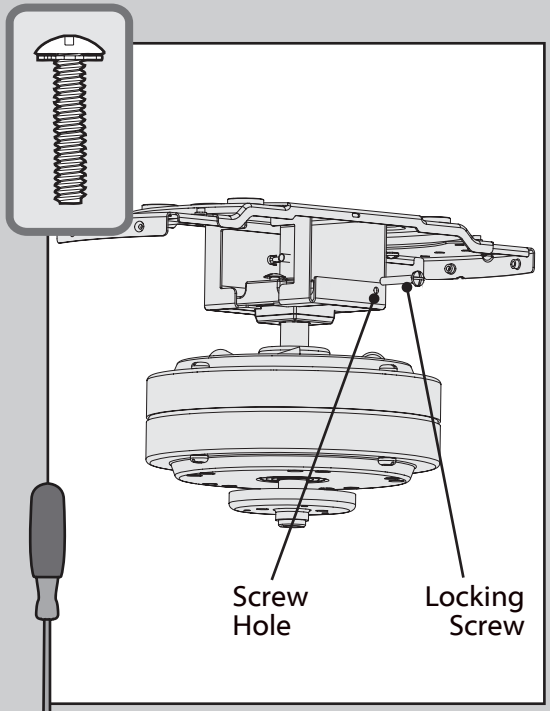

Once the motor is in the ceiling bracket, use the two locking screws found in the ★ hardware bag to secure the motor to the ceiling bracket.

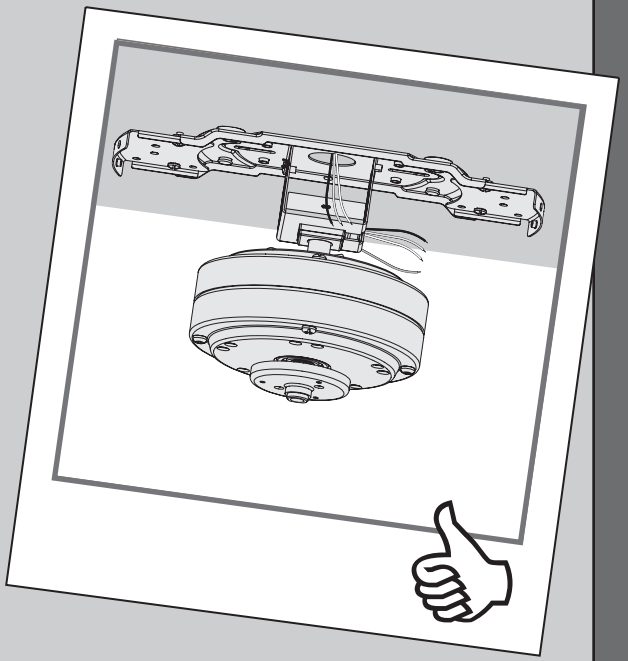

Note: Fan style may vary.

M0105-01 • 09/15/15 • © 2015 Hunter Fan Company

Note: To connect the wires, hold the bare metal leads together and place a wire connector over them, then twist clockwise until tight.

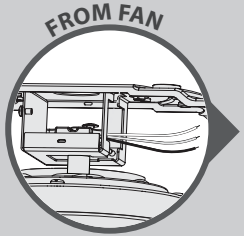

Using an orange wire connector from the ★ hardware bag, connect the 3 grounding wires (green, green/yellow stripe, or bare copper) coming from the ceiling, fan, and hanging bracket.

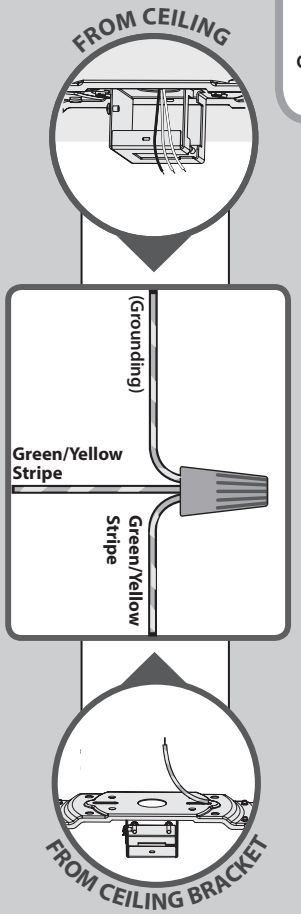

For a Single Switch

Using the orange wire connectors from the ★ hardware bag, connect the black wire (ungrounded) from the ceiling to the black and the blue wires from the fan. Connect the white wire (grounded) from the ceiling to the white wire from the fan.

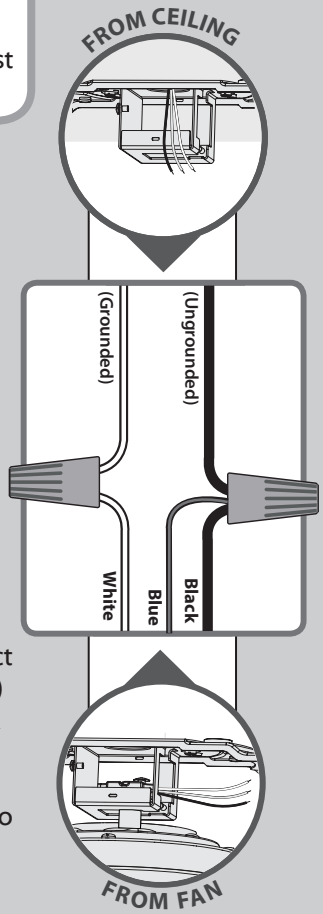

For Dual Switches

Using orange wire connectors from the ★ hardware bag, connect the white wire (grounded) from the ceiling to the white wire from the fan. Connect the black wire (ungrounded) from the ceiling to the black wire from the fan. Connect the second (ungrounded) wire from the ceiling to the blue wire from the fan.

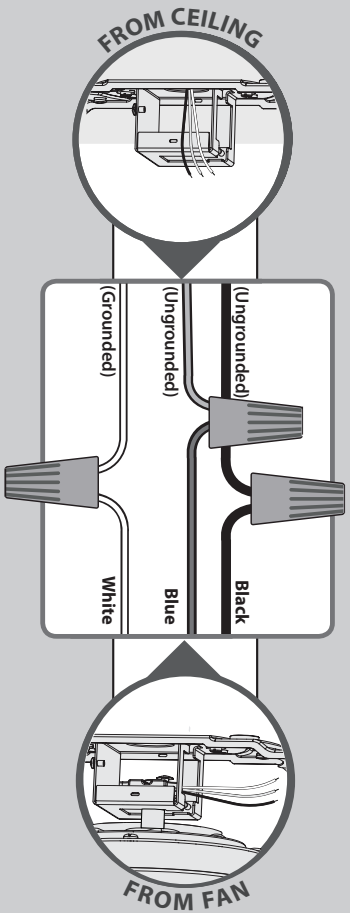

Turn the splices upward and push them carefully back through the hanger bracket into the outlet box. Spread the wires apart, with the grounded wires on one side of the outlet box and the ungrounded wires on the other side of the outlet box.

Refer to CAUTION c.1 on pg. 2

M0105-01 • 09/15/15 • © 2015 Hunter Fan Company

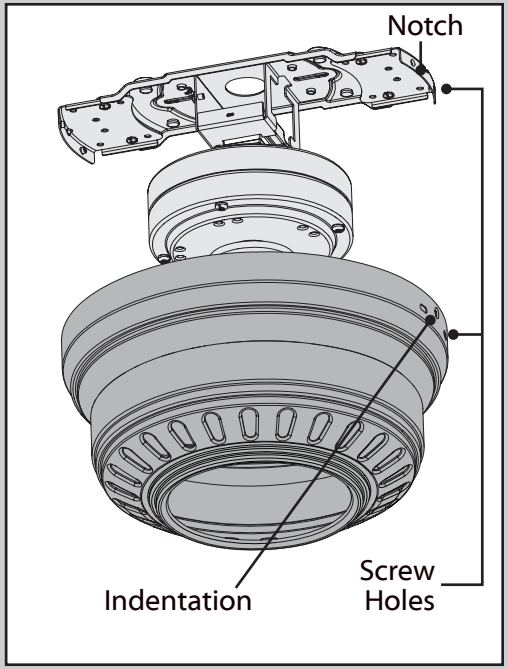

Raise the motor housing up over the motor and ceiling bracket. Turn the motor housing so the screw holes align and the indentation in the housing locks into place with the notch in the ceiling bracket. **The motor housing is not secured until the next step is complete. Do not leave unattended.**

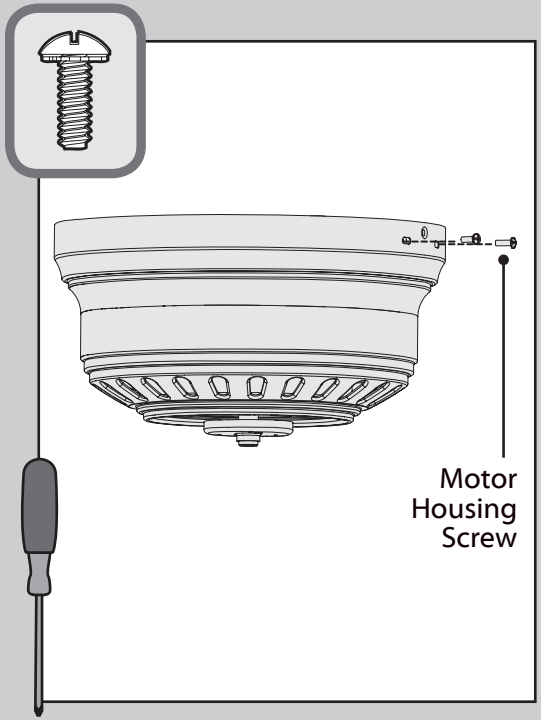

With a Phillips head screwdriver, install the four motor housing screws found in the ● hardware bag. Tighten all four screws securely.

M0105-01 • 09/15/15 • © 2015 Hunter Fan Company

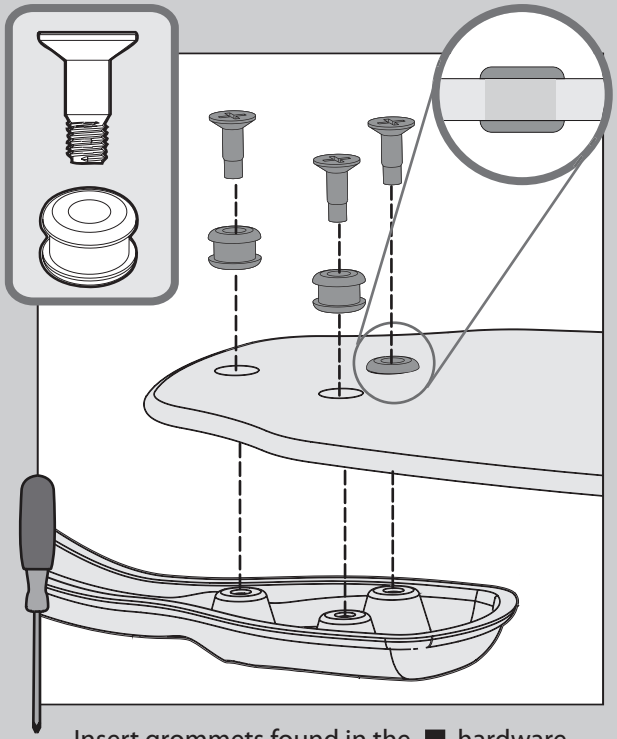

Insert grommets found in the ■ hardware bag into the holes in the blades, then secure each blade to a blade iron with screws found in the ▲ hardware bag.

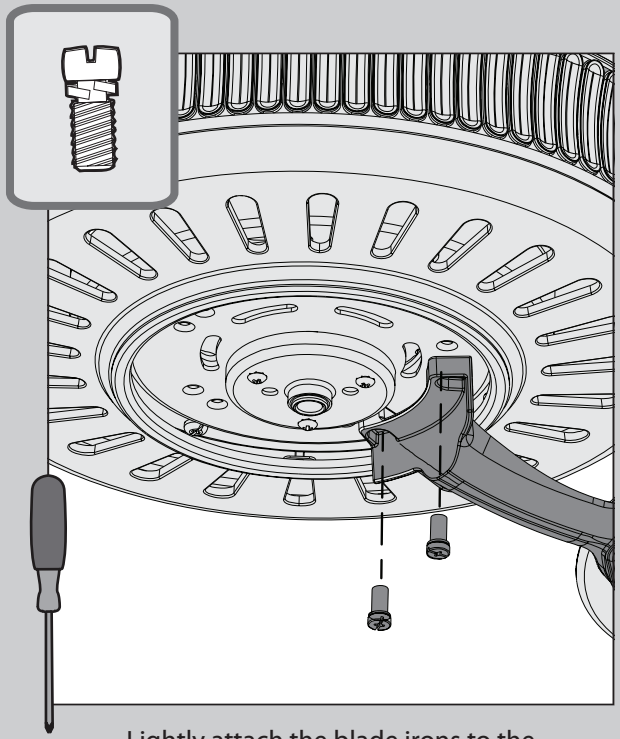

Lightly attach the blade irons to the motor with screws found in the ⧖ hardware bag, then securely tighten after both screws are attached.

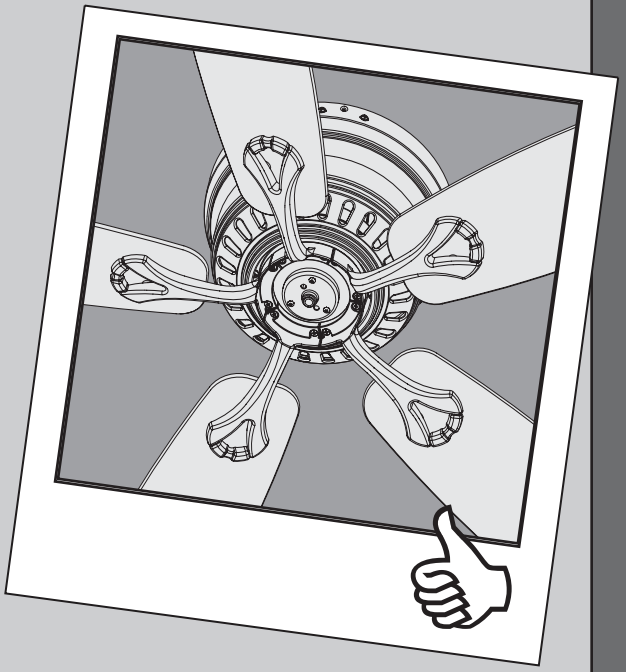

M0105-01 • 09/15/15 • © 2015 Hunter Fan Company

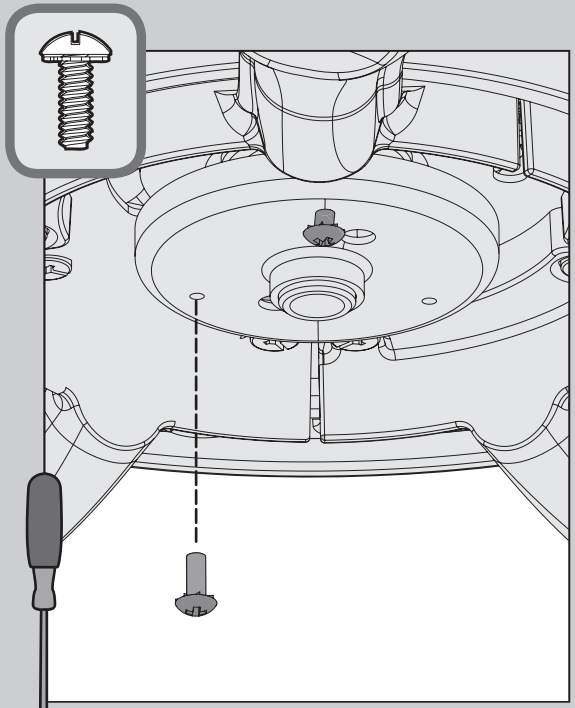

Screw two housing assembly screws from the ≡ hardware bag halfway into the motor housing. It does not matter which two screw holes you choose.

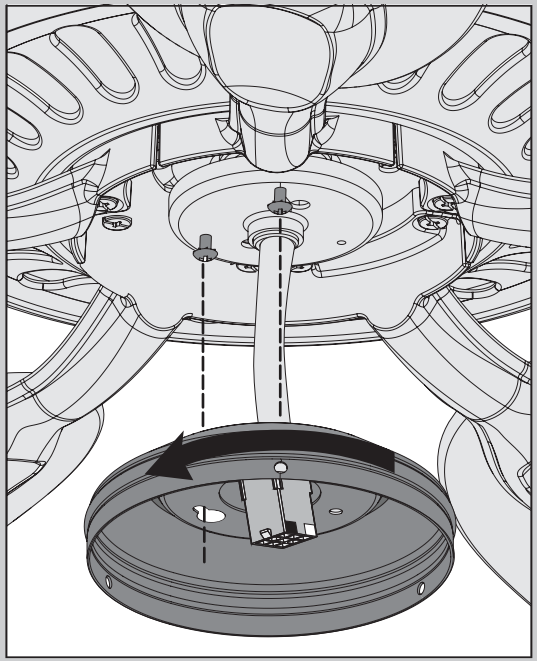

Feed the wire plug through the center hole of the upper switch housing, then wrap keyhole slots around the screws and twist counterclockwise.

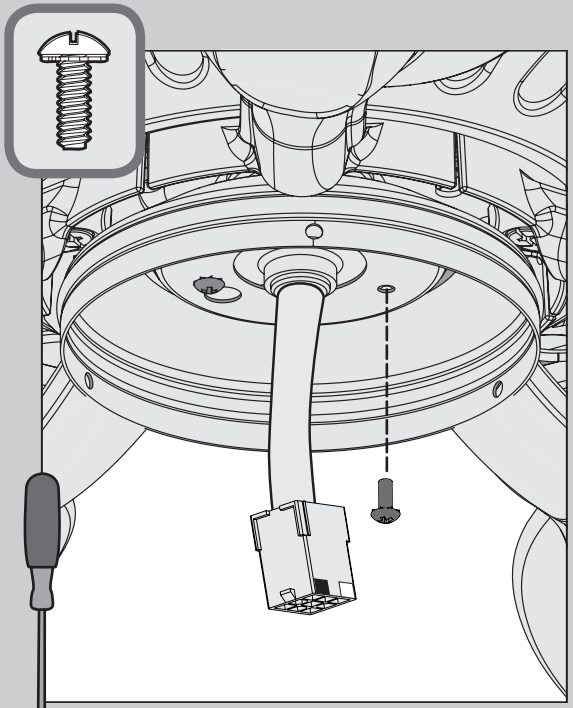

Insert the third screw, found in the ≡ hardware bag, into place and then tighten all three screws.

Make sure the upper switch housing is securely attached to the mounting plate. Failure to properly secure all three assembly screws could result in the switch housing fixture falling.

M0105-01 • 09/15/15 • © 2015 Hunter Fan Company

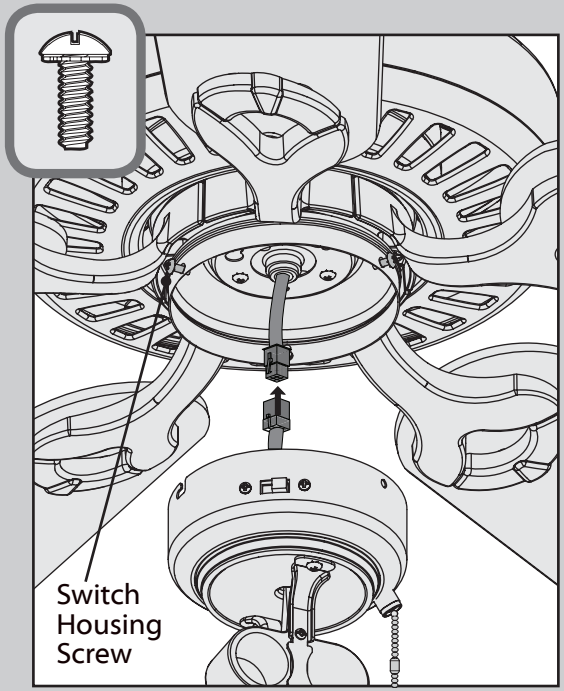

Partially install two of the switch housing screws found in the ≡ hardware bag. Connect the plugs from the upper and lower switch housings. Make sure to line up the colored markings on the connectors.

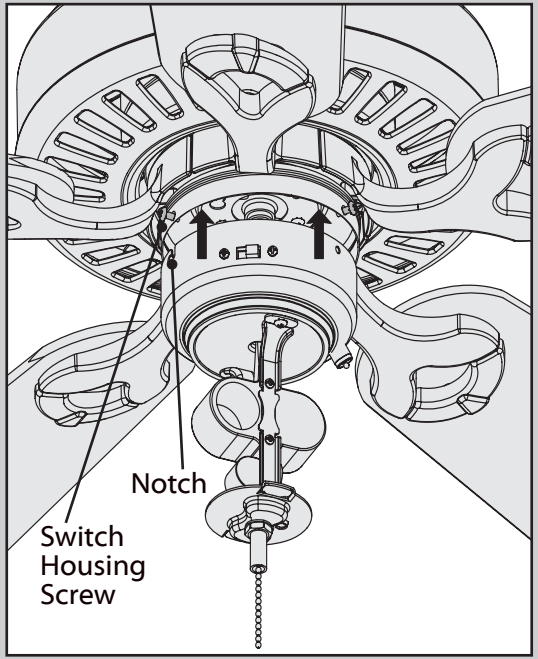

Align the notches in the sides of the lower switch housing with the upper switch housing screws. Lift the lower switch housing. Twist the lower switch housing clockwise to lock into place. Then thread the fan pull chain through the hole in the light kit.

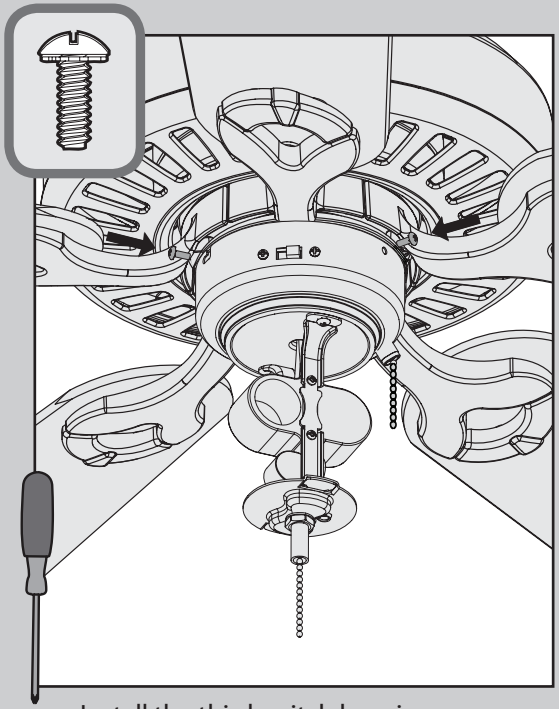

Install the third switch housing screw. Tighten all three screws securely.

Want to install your fan without a light kit?
Go to www.HunterFan.com/FAQs and click "How do I install my fan without the light kit?"

Make sure the lower switch housing is securely attached to the upper switch housing. Failure to properly secure all three assembly screws could result in the light fixture falling.

M0105-01 • 09/15/15 • © 2015 Hunter Fan Company

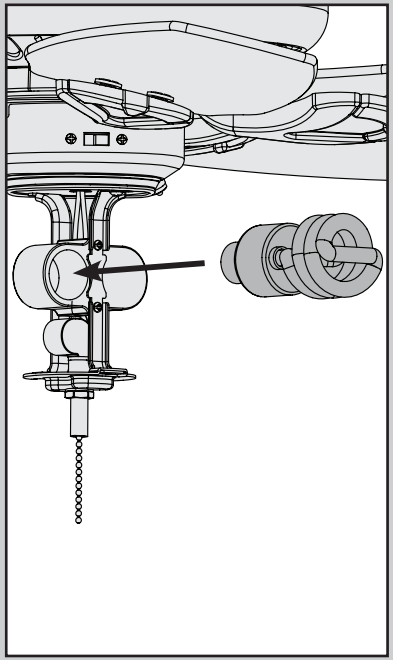

Install a bulb into each of the sockets. When necessary, replace with bulbs of the same wattage.

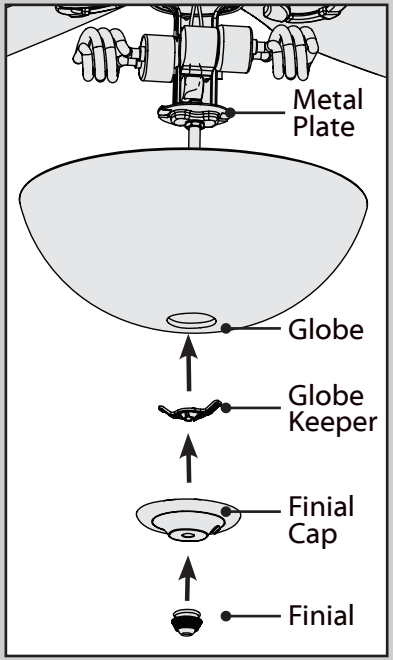

Press the globe and globe keeper flush against the metal plate. Thread the light pull chain through the hole in the center of the finial cap and thread the fan pull chain through the hole in the side of the cap. Finally, thread only the light pull chain through the hole in the finial and screw the finial onto the threaded rod.

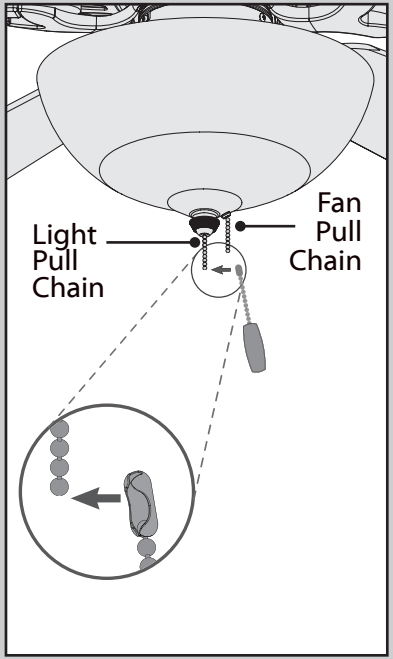

Connect the appropriate pull chain pendant to each of the short chains coming from the finial and finial cap. The fan pull chain controls the speed: from high to off. The light pull chain controls the light fixture: on and off.

See next page for fan operation instructions.

Note: Fan style and number of lights may vary.

M0105-01 • 09/15/15 • © 2015 Hunter Fan Company

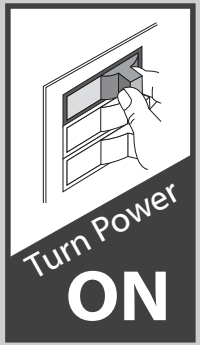

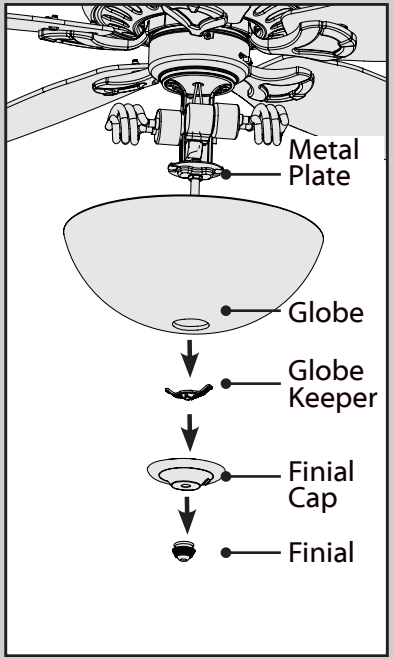

Changing the bulbs - unscrew the finial and remove it from the threaded rod. Remove the finial cap and unscrew the globe keeper while supporting the globe with your other hand. Carefully remove the globe. Unscrew bulbs and replace with bulbs of same type and wattage. Reinstall the globe assembly.

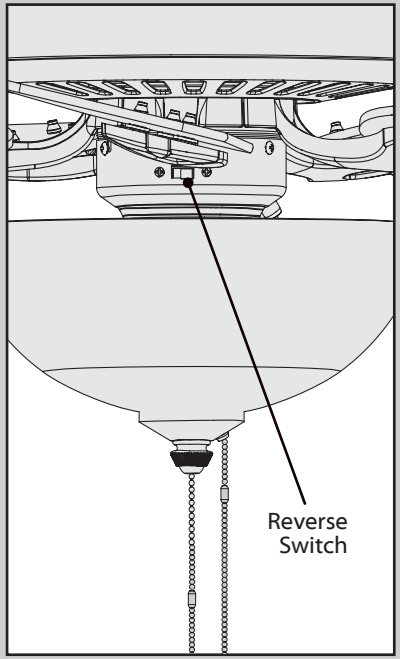

Changing the direction of air flow - move the reverse switch to the opposite position.

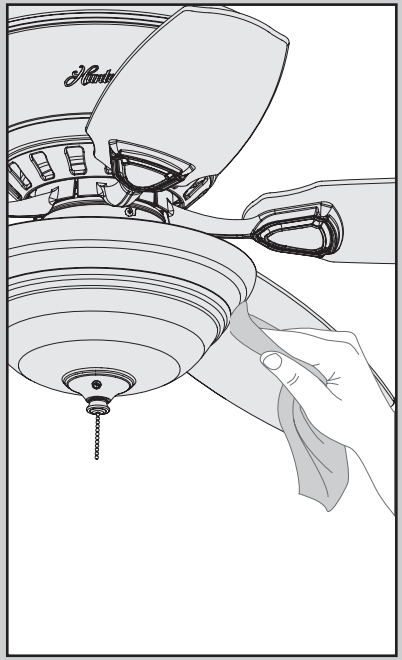

Cleaning the fan - use soft brushes or cloths to prevent scratching. Cleaning products may damage the finishes.

For questions regarding removing a light kit, call customer service 1-888-830-1326.

M0105-01 • 09/15/15 • © 2015 Hunter Fan Company

Fan doesn't work

- Make sure power switch is on.
- Pull the pull chain to make sure it is on.
- Push the motor reversing switch firmly left or right to ensure that it is engaged.
- Check the circuit breaker to ensure the power is turned on.
- Make sure the blades spin freely.
- Turn off power from the circuit breaker, then loosen the canopy and check all the connections according to the wiring diagram on page 7.
- Check the plug connection in the switch housing.

Excessive wobbling

- Tighten all of the blade and blade iron screws until they are snug.
- Use the provided balancing kit and instructions to balance the fan.

Noisy Operation

- Tighten the blade and blade iron screws until they are snug.
- Check to see if any of the blades are cracked. If so, replace all of the blades.

M0105-01 • 09/15/15 • © 2015 Hunter Fan Company