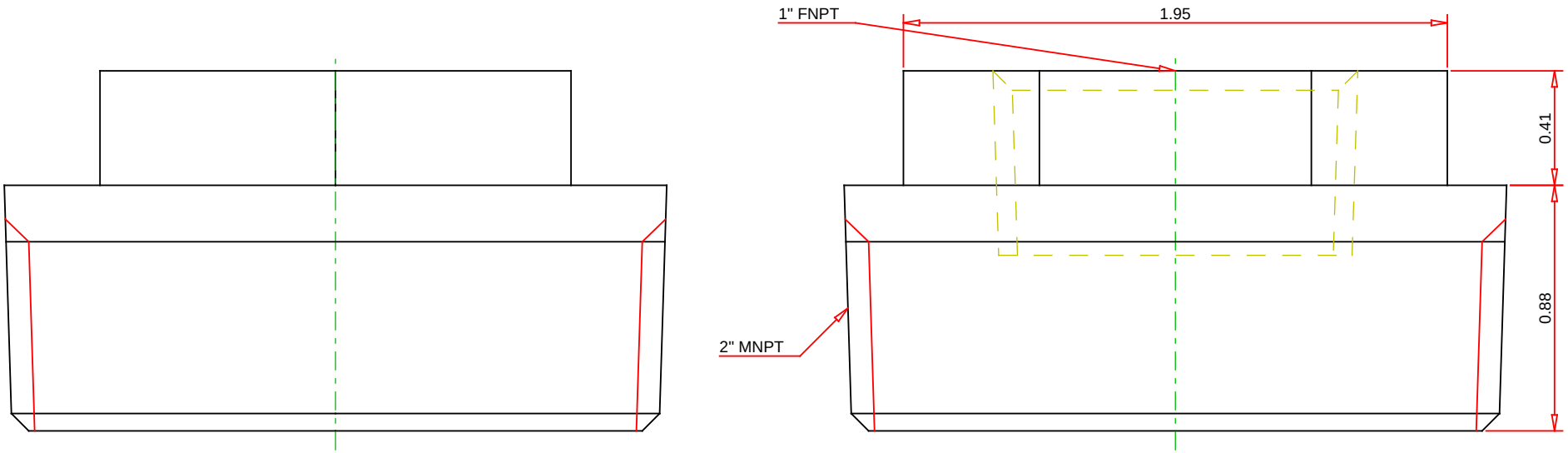

Note :
- Drawing is not to Scale.
- Dimensions are subject to change.
- All dimensions are in Inches and are for Reference Only.

Part Name:
2x1-3383-Galvanized

Product No:
0819907767

Description:
3383 2X1 GALV IMI HEX BUSHING

ASC Engineered Solutions

Email: marketing@asc-es.com

Website: https://www.asc-es.com/

Date: 8-SEP-2022