Trusted. Tested. Tough.®

Product information presented here reflects conditions at time of publication. Consult factory regarding discrepancies or inconsistencies.

ZOELLER® PUMP COMPANY

SECTION: C2.00.110
CL0037
0321
Supersedes
0711

MAIL TO: P.O. BOX 16347 • Louisville, KY 40256-0347
SHIP TO: 3649 Cane Run Road • Louisville, KY 40211-1961
TEL: (502) 778-2731 • 1 (800) 928-PUMP • FAX: (502) 774-3624

Visit our website:
zoellerpumps.com

High Water Alarm Bracket

INSTALLATION INSTRUCTIONS

This High Water Alarm Bracket is designed for use with either the WW1 or WW4 effluent filters from Zoeller Pump Company.

1) Determine the most appropriate point of attachment on the effluent filter. Refer to the diagram below.

2) Determine the appropriate location of the mounting screw hole.

3) Fasten alarm float bracket to filter using supplied stainless steel screw and washer. It is recommended that a 1/8" pilot hole be drilled to make the screw easier to install.

4) Determine float switch (sold separately) placement by adjusting float holder and tether length. Ensure that the float motion is not obstructed by the filter housing.

5) Attach filter removal handle (optional).

6) To complete the installation, follow installation and wiring instructions included in the alarm pack or control panel (sold separately). Recommended alarm pack – Zoeller.

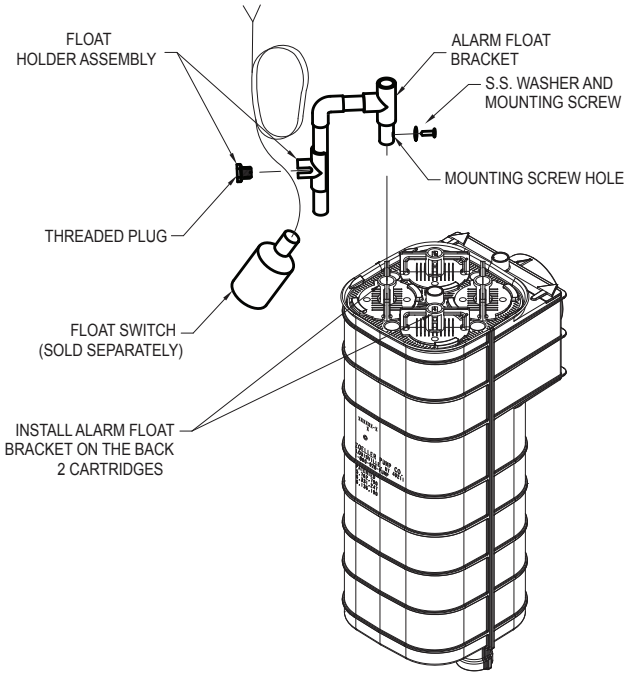

WW4 DELUXE EFFLUENT FILTER

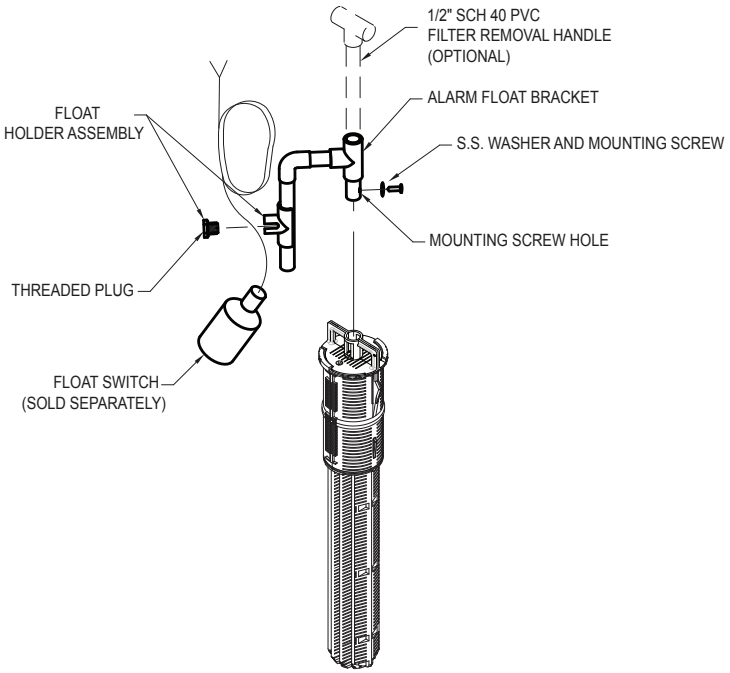

WW1 EFFLUENT FILTER

SK2861

© Copyright 2021. All rights reserved.

High Water Alarm Bracket

Limited Warranty

Manufacturer warrants, to the purchaser and subsequent owner during the warranty period, every new product to be free from defects in material and workmanship under normal use and service, when properly used and maintained, for a period of one year from date of purchase by the end user, or 18 months from date of original manufacture of the product, whichever comes first. Parts that fail within the warranty period, one year from date of purchase by the end user, or 18 months from the date of original manufacture of the product, whichever comes first, that inspections determine to be defective in material or workmanship, will be repaired, replaced or remanufactured at manufacturer's option, provided however, that by so doing we will not be obligated to replace an entire assembly, the entire mechanism or the complete unit. No allowance will be made for shipping charges, damages, labor or other charges that may occur due to product failure, repair or replacement.

This warranty does not apply to and there shall be no warranty for any material or product that has been disassembled without prior approval of manufacturer, subjected to misuse, misapplication, neglect, alteration, accident or act of God; that has not been installed, operated or maintained in accordance with manufacturer's installation instructions; that has been exposed to outside substances including but not limited to the following: sand, gravel, cement, mud, tar, hydrocarbons, hydrocarbon derivatives (oil, gasoline, solvents, etc.), or other abrasive or corrosive substances, wash towels or feminine sanitary products, etc. in all pumping applications. The warranty set out in the paragraph above is in lieu of all other warranties expressed or implied; and we do not authorize any representative or other person to assume for us any other liability in connection with our products.

Contact manufacturer at, 3649 Cane Run Road, Louisville, Kentucky 40211, Attention: Customer Service Department to obtain any needed repair or replacement of part(s) or additional information pertaining to our warranty.

MANUFACTURER EXPRESSLY DISCLAIMS LIABILITY FOR SPECIAL, CONSEQUENTIAL OR INCIDENTAL DAMAGES OR BREACH OF EXPRESSED OR IMPLIED WARRANTY; AND ANY IMPLIED WARRANTY OF FITNESS FOR A PARTICULAR PURPOSE AND OF MERCHANTABILITY SHALL BE LIMITED TO THE DURATION OF THE EXPRESSED WARRANTY.

Some states do not allow limitations on the duration of an implied warranty, so the above limitation may not apply to you. Some states do not allow the exclusion or limitation of incidental or consequential damages, so the above limitation or exclusion may not apply to you.

This warranty gives you specific legal rights and you may also have other rights which vary from state to state.

All Zoeller Pump Company products must be installed and maintained in accordance with all applicable codes.
Product information presented here reflects conditions at time of publication. Consult factory regarding discrepancies or inconsistencies.

© Copyright 2021. All rights reserved.