canplas PLUMBING

Submittal Sheet

Part Description:

2" PVC WHITE DWV 1/8 or 45 Degree Long Turn Bend or Elbow, H X H

Part Number:

192502

Approvals and Listings maintained by:
Canplas Industries Ltd
Canada: 1-800-461-5300 USA: 1-888-461-5307

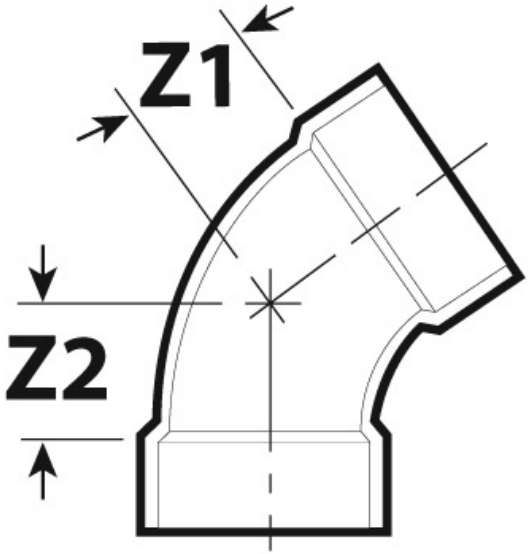

Part #	Part UPC	Colour	Size (inches)	Ctn Qty	Ctn Bar Code	Ctn. Wt (Kgs)	Ctn. Wt (lbs)	Skid Cubic (m)	Skid Cubic (ft)	Ctns/Skid
192502	662671190253	WHITE	2X2	45	10662671190250	6.82	15.00	1.79	63.37	48

Dimensions (inches)

Z1	Z2
1.47	1.50