McGuire Manufacturing Co., Inc.
60 Grandview Court
Cheshire, Connecticut 06410
(203) 699-1801 Fax (203) 699-1813
customerservice@mcguiremfg.com mcguiremfg.com

PRODUCT SPECIFICATION

Part No. 151

Brass Basket Strainer

Job Name: **Submittal Number:**

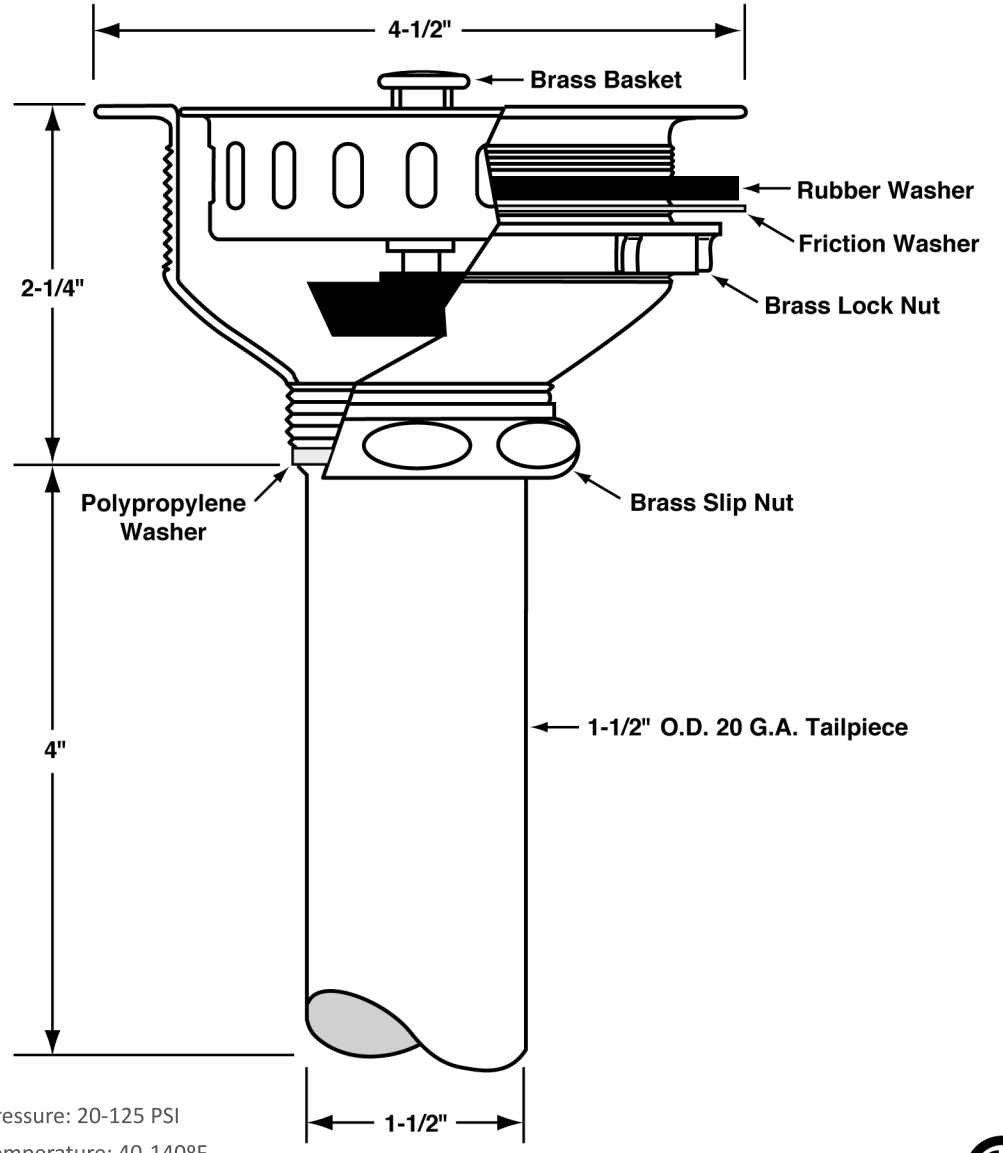

- Rated Operating Pressure: 20-125 PSI
- Rated Operating Temperature: 40-140ºF
- Note: 180°F max. during temporary high-temperature system flush

See options and accessories section for details on product variations.

ASME A112.18.2/CSA B125.2

Specifications:

Heavy duty forged brass basket strainer with a polished and chrome plated brass strainer body, 1-1/2" x 4" seamless brass tailpiece, cast brass lock and coupling nuts. Fits sink thickness up to 5/8". Basket strainer in compliance with CSA or other recognized testing authority and bear both manufacturer and testing mark.

WARNING:

This product can expose you to chemicals including lead, which is known to the State of California to cause cancer, and birth defects or other reproductive harm. For more information go to www.P65Warnings.ca.gov.

© 2022 McGuire Manufacturing Co., Inc. All rights reserved / III Strainers and P.O. Plugs / www.mcguiremfg.com