canplas PLUMBING

Submittal Sheet

Part Description:

3" ABS DWV 1/16 or 22-1/2 Degree Bend or Elbow H X H

Part Number:

102553

Approvals and Listings maintained by:
Canplas Industries Ltd
Canada: 1-800-461-5300 USA: 1-888-461-5307

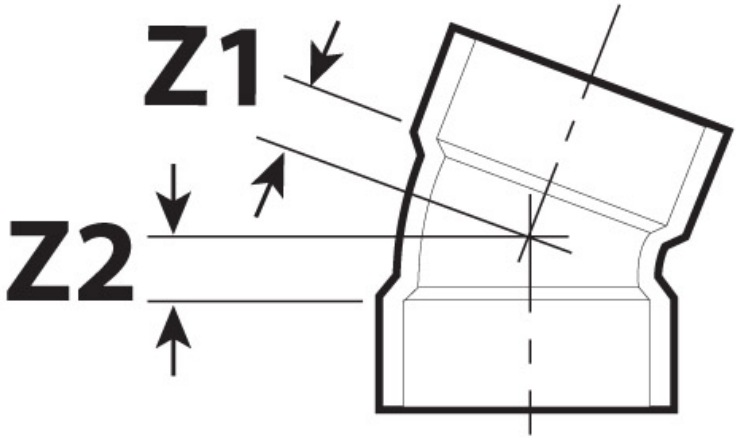

Part #	Part UPC	Colour	Size (inches)	Ctn Qty	Ctn Bar Code	Ctn. Wt (Kgs)	Ctn. Wt (lbs)	Skid Cubic (m)	Skid Cubic (ft)	Ctns/Skid
102553	662671101273	BLACK	3X3	20	10662671101270	4.69	10.32	1.79	63.37	48

Dimensions (inches)

Z1	Z2
0.81	0.81