Pfister

25mm Cartridge

974-074 ❑

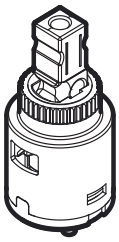

Specifications

Features

- Ceramic Disc Cartridge
- Pforever Warranty®

Code Compliance

Pfister products are designed and manufactured in compliance with the following standards and codes:

- ASME A112.18.1
- NSF 61/9
- NSF 372

Dimensions

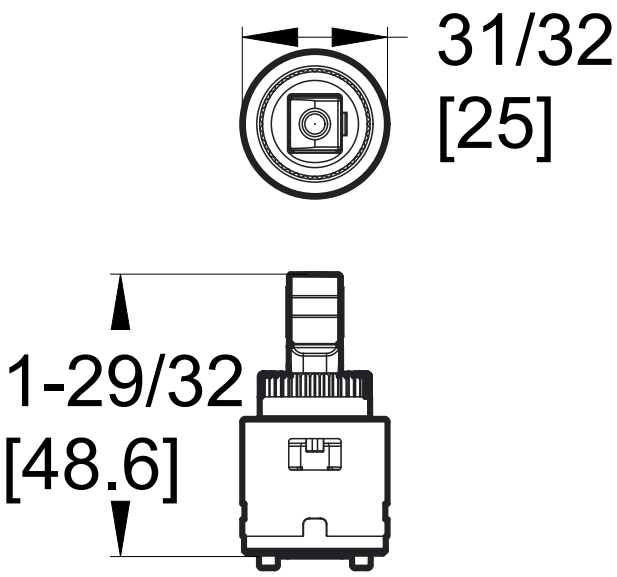

Copyright © 2018, Pfister Inc.