canplas PLUMBING

Submittal Sheet

Part Description:

3" ABS DWV 1/16 or 22-1/2 Degree Street Bend or Elbow Spigot X H

Part Number:

102563

Approvals and Listings maintained by:
Canplas Industries Ltd
Canada: 1-800-461-5300 USA: 1-888-461-5307

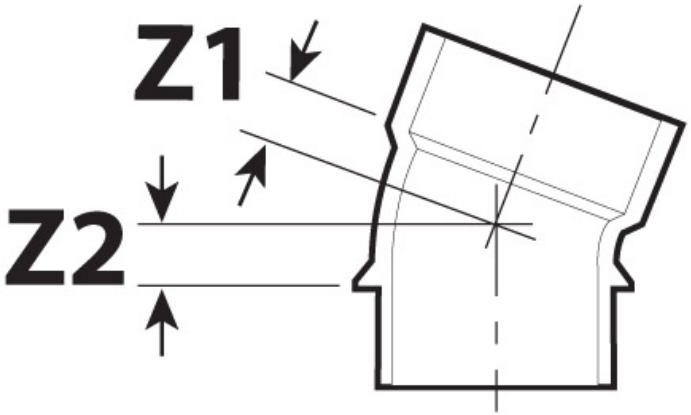

Part #	Part UPC	Colour	Size (inches)	Ctn Qty	Ctn Bar Code	Ctn. Wt (Kgs)	Ctn. Wt (lbs)	Skid Cubic (m)	Skid Cubic (ft)	Ctns/Skid
102563	662671107312	BLACK	3X3	30	10662671107319	6.94	15.27	1.86	65.82	32

Dimensions (inches)

Z1	Z2
0.65	0.97