canplas PLUMBING

Submittal Sheet

Part Description:

4" PVC WHITE DWV 1/4 or 90 Degree Street Bend or Elbow, Spigot X H

Part Number:

192454L

Approvals and Listings maintained by:
Canplas Industries Ltd
Canada: 1-800-461-5300 USA: 1-888-461-5307

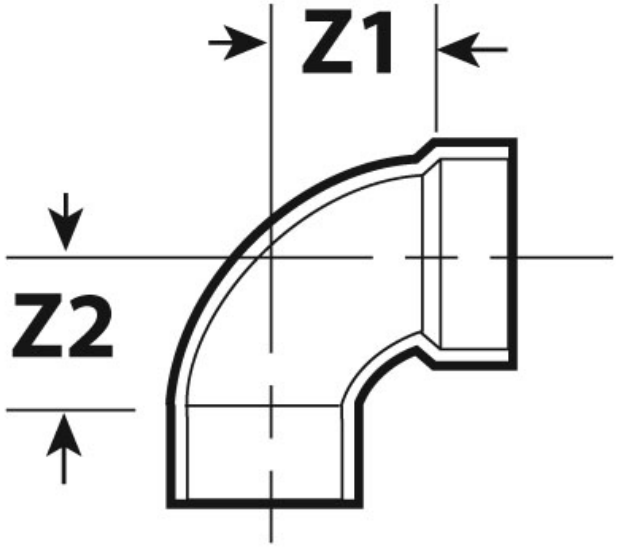

Part #	Part UPC	Colour	Size (inches)	Ctn Qty	Ctn Bar Code	Ctn. Wt (Kgs)	Ctn. Wt (lbs)	Skid Cubic (m)	Skid Cubic (ft)	Ctns/Skid
192454L	662671192004	WHITE	4X4	15	10662671192001	13.09	28.80	1.90	67.04	18

Dimensions (inches)

Z1	Z2
3.76	4.07