ASC™ Engineered Solutions

# Welded Pipe Nipples – Black & Galvanized
## Standard Schedule 40, XH Schedule 80

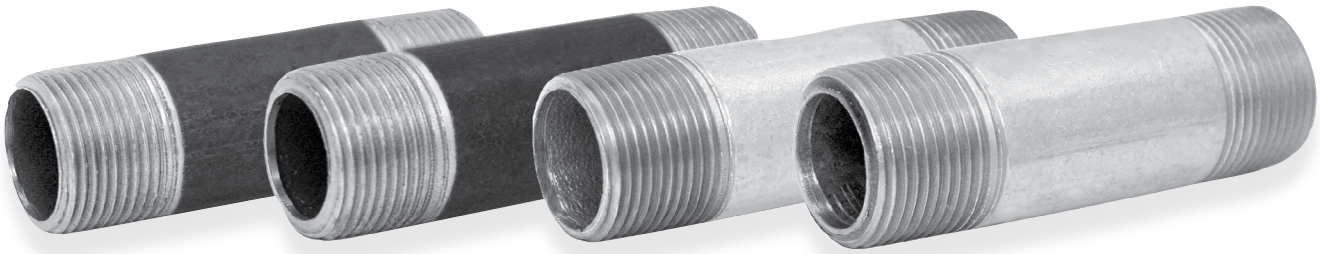

☐ **Fig. 339:** Standard Black Schedule 40

☐ **Fig. 338:** Extra Heavy Black Schedule 80

☐ **Fig. 343:** Standard Galv. Schedule 40

☐ **Fig. 342:** Extra Heavy Galv. Schedule 80

### Specifications

**Dimensions:** ASTM A733 (See table below for standard sizes)
**Threads:** NPT per ASME B1.20.1
**Material:** ASTM A53 Welded Steel Pipe
**Finish:** Black, Hot Dip Galvanized, or Zinc Electroplated

Standard and Extra Heavy Right and Left Nipples available in ⅛" – 4" diameter and 4" or 6" lengths. See Special Design Pipe Nipples on page 5 for more information.

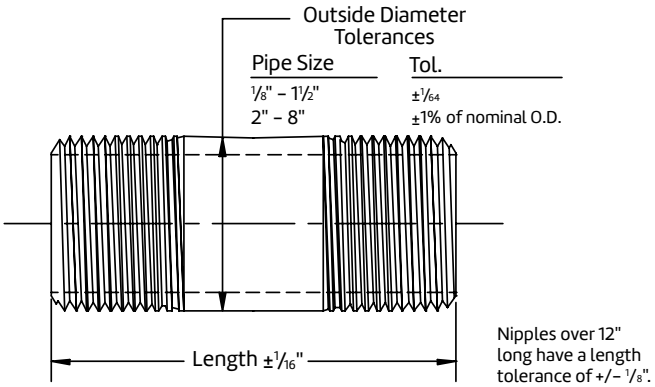


| Pipe Size | Pipe O.D. | Length Close | Pipe Nipple Lengths | | | | | | | | | | | | | | | |
|---|---|---|---|---|---|---|---|---|---|---|---|---|---|---|---|---|---|---|
| in | in | in | | | | | | | | | | | | | | | | |
| ⅛ | 0.405 | ¾ | 1½ | 2 | 2½ | 3 | 3½ | 4 | 4½ | 5 | 5½ | 6 | 7 | 8 | 9 | 10 | 11 | 12 |
| ¼ | 0.540 | ⅞ | 1½ | 2 | 2½ | 3 | 3½ | 4 | 4½ | 5 | 5½ | 6 | 7 | 8 | 9 | 10 | 11 | 12 |
| ⅜ | 0.675 | 1 | 1½ | 2 | 2½ | 3 | 3½ | 4 | 4½ | 5 | 5½ | 6 | 7 | 8 | 9 | 10 | 11 | 12 |
| ½ | 0.840 | 1⅛ | 1½ | 2 | 2½ | 3 | 3½ | 4 | 4½ | 5 | 5½ | 6 | 7 | 8 | 9 | 10 | 11 | 12 |
| ¾ | 1.050 | 1⅜ | 1½ | 2 | 2½ | 3 | 3½ | 4 | 4½ | 5 | 5½ | 6 | 7 | 8 | 9 | 10 | 11 | 12 |
| 1 | 1.315 | 1½ | | 2 | 2½ | 3 | 3½ | 4 | 4½ | 5 | 5½ | 6 | 7 | 8 | 9 | 10 | 11 | 12 |
| 1¼ | 1.660 | 1⅝ | | 2 | 2½ | 3 | 3½ | 4 | 4½ | 5 | 5½ | 6 | 7 | 8 | 9 | 10 | 11 | 12 |
| 1½ | 1.900 | 1¾ | | 2 | 2½ | 3 | 3½ | 4 | 4½ | 5 | 5½ | 6 | 7 | 8 | 9 | 10 | 11 | 12 |
| 2 | 2.375 | 2 | | | 2½ | 3 | 3½ | 4 | 4½ | 5 | 5½ | 6 | 7 | 8 | 9 | 10 | 11 | 12 |
| 2½ | 2.875 | 2½ | | | | 3 | 3½ | 4 | 4½ | 5 | 5½ | 6 | 7 | 8 | 9 | 10 | 11 | 12 |
| 3 | 3.500 | 2⅝ | | | | 3 | 3½ | 4 | 4½ | 5 | 5½ | 6 | 7 | 8 | 9 | 10 | 11 | 12 |
| 3½ | 4.000 | 2¾ | | | | | 3½ | 4 | 4½ | 5 | 5½ | 6 | 7 | 8 | 9 | 10 | 11 | 12 |
| 4 | 4.500 | 2⅞ | | | | | | 4 | 4½ | 5 | 5½ | 6 | 7 | 8 | 9 | 10 | 11 | 12 |
| 5 | 5.563 | 3 | | | | | | | 4½ | 5 | 5½ | 6 | 7 | 8 | 9 | 10 | 11 | 12 |
| 6 | 6.625 | 3⅛ | | | | | | | 4½ | 5 | 5½ | 6 | 7 | 8 | 9 | 10 | 11 | 12 |

**Note:** Other lengths available upon request. 8" Pipe Size available as POA – contact your ASC Engineered Solutions™ Representative for details.

| PROJECT INFORMATION | APPROVAL STAMP |
|---|---|
| Project: | ☐ Approved |
| Address: | ☐ Approved as noted |
| Contractor: | ☐ Not approved |
| Engineer: | Remarks: |
| Submittal Date: | |
| Notes 1: | |
| Notes 2: | |

## Specifications

**Unless otherwise specified** welded nipples ASTM A 53 are furnished on orders for steel nipples in standard and extra strong sizes ⅛" – 8" NPS (6 – 200 DN).

**Welded steel nipples (A 53 Type F or Type E)** are available in standard and extra strong sizes ⅛" – 8" NPS (6 – 200 DN), right hand threads, black or galvanized.

**Seamless nipples** manufactured for the U.S. and International markets are **not** phosphate coated. Seamless nipples manufactured for Canada **are** phosphate coated.

**Seamless steel pressure tube nipples (ASTM A 106 Grade B)** are available in standard and extra strong sizes ⅛" – 8" NPS (6 – 200 DN) with right hand threads, black only.

**Right and left steel nipples** are available in standard and extra heavy weight sizes ⅛" – 4" NPS (8 – 50 DN), in 4" (102mm) and 6" (152mm) lengths.

**Nipples** are available from stock in ⅛" – 8" NPS (6 – 200 DN) diameter, close to 12 NPS (300 DN) in length. Sizes 13" – 24" NPS (325 – 600 DN). (Prices on application.)

Steel pipe nipples meet ASTM A733.

⅛" Schedule 40 and 80 galvanized nipples are all electroplated.

## Identification

Where possible, each seamless pipe nipple is identified with the following:

- A trade mark
- Seamless designation "SMLS"
- Pipe schedule 40, 80, 160, XXS
- Material designation
- Heat number for traceability

## Standards and Specifications

| | Dimensions | Material | Thread | Federal/Other |
|---|---|---|---|---|
| | | **Pipe Nipples** | | |
| Steel Pipe - Welded | ASTM A733 | ASTM A53 Type F or Type E | ASME B1.20.1 | WWN 351 |
| Steel Pipe - Seamless (High Temp.) | ASTM A733 | ASTM A106 Gr. B | ASME B1.20.1 | WWN 351 |
| Brass | ASTM B687 | ASTM B43 | ASME B1.20.1 | WWN 351 |

ASC Engineered Solutions

# Steel Pipe Nipples
# Welded – Ready Cut Pipe Standard – Schedule 40

## "A" Assortments
Mixed Cartons (Black — Figure 339 & Galvanized — Figure 343)

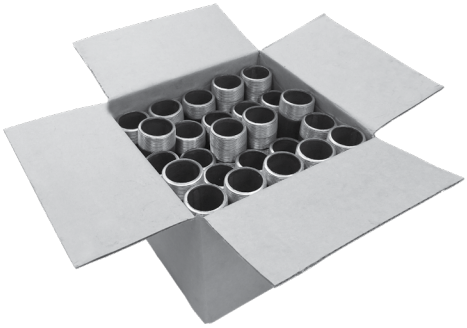

| Nom. Pipe Size | Close | 1½" | 2" | 2½" | 3" | 3½" | 4" | 4½" | 5" | 5½" | 6" | No. of Pieces | Approx. Wt. Lbs. |
|---|---|---|---|---|---|---|---|---|---|---|---|---|---|
| ½ | 4 | 3 | 3 | 3 | 2 | 2 | 2 | 1 | 2 | 1 | 2 | 25 | 5.00 |
| ½ | 20 | 10 | 15 | 10 | 10 | 5 | 10 | 5 | 5 | 5 | 5 | 100 | 18.00 |
| ¾ | 4 | 3 | 3 | 3 | 2 | 2 | 2 | 1 | 2 | 1 | 2 | 25 | 7.00 |
| ¾ | 20 | 10 | 15 | 10 | 10 | 5 | 10 | 5 | 5 | 5 | 5 | 100 | 24.00 |
| 1 | 15 | – | 15 | 10 | 12 | 5 | 5 | 4 | 3 | 3 | 3 | 75 | 24.00 |
| 1 | 5 | – | 5 | 3 | 2 | 2 | 2 | 1 | 2 | 1 | 2 | 25 | 10.00 |
| 1¼ | 5 | – | 5 | 3 | 2 | 2 | 2 | 1 | 2 | 1 | 2 | 25 | 12.00 |
| 1½ | 5 | – | 5 | 3 | 2 | 2 | 2 | 1 | 2 | 1 | 2 | 25 | 15.00 |
| 2 | 6 | – | – | 3 | 3 | 2 | 3 | 1 | 3 | 1 | 3 | 25 | 22.00 |

All items ship in bulk quantities.

## "66" Packs or Assorted 6 Cartons
(Black — Figure 339 & Galvanized — Figure 343)

| Nom. Pipe Size | Close | 1½" | 2" | 2½" | 3" | 3½" | 4" | 4½" | 5" | 5½" | 6" | No. of Pieces | Approx. Wt. Lbs. |
|---|---|---|---|---|---|---|---|---|---|---|---|---|---|
| ⅛ | 6 | 6 | 6 | 6 | 6 | 6 | 6 | 6 | 6 | 6 | 6 | 66 | 6.00 |
| ¼ | 6 | 6 | 6 | 6 | 6 | 6 | 6 | 6 | 6 | 6 | 6 | 66 | 9.00 |
| ⅜ | 6 | 6 | 6 | 6 | 6 | 6 | 6 | 6 | 6 | 6 | 6 | 66 | 12.00 |
| ½ | 6 | 6 | 6 | 6 | 6 | 6 | 6 | 6 | 6 | 6 | 6 | 66 | 14.00 |
| ¾ | 6 | 6 | 6 | 6 | 6 | 6 | 6 | 6 | 6 | 6 | 6 | 66 | 19.00 |
| 1 | 6 | – | 6 | 6 | 6 | 6 | 6 | 6 | 6 | 6 | 6 | 60 | 26.00 |
| 1¼ | 6 | – | 6 | 6 | 6 | 6 | 6 | 6 | 6 | 6 | 6 | 60 | 33.00 |
| 1½ | 6 | – | 6 | 6 | 6 | 6 | 6 | 6 | 6 | 6 | 6 | 60 | 41.00 |
| 2 | 6 | – | – | 6 | 6 | 6 | 6 | 6 | 6 | 6 | 6 | 54 | 53.00 |

All items ship in bulk quantities.

## Handy Pack Assortments
Mixed Cartons (Black — Figure 339 & Galvanized — Figure 343)

| Nom. Pipe Size | Close | 1½" | 2" | 2½" | 3" | 3½" | 4" | 4½" | 5" | 5½" | 6" | No. of Pieces | Approx. Wt. Lbs. |
|---|---|---|---|---|---|---|---|---|---|---|---|---|---|
| ⅛ | 6 | 6 | 6 | 6 | 6 | 6 | 6 | 6 | 6 | 6 | 6 | 66 | 6.00 |
| ¼ | 6 | 6 | 6 | 6 | 6 | 6 | 6 | 6 | 6 | 6 | 6 | 66 | 9.00 |
| ⅜ | 6 | 6 | 6 | 6 | 6 | 6 | 6 | 6 | 6 | 6 | 6 | 66 | 12.00 |
| ½ | 6 | 6 | 6 | 6 | 6 | 6 | 6 | 6 | 6 | 6 | 6 | 66 | 14.00 |
| ¾ | 6 | 6 | 6 | 6 | 6 | 6 | 6 | 6 | 6 | 6 | 6 | 66 | 19.00 |
| 1 | 6 | – | 6 | 6 | 6 | 6 | 6 | 6 | 6 | 6 | 6 | 60 | 26.00 |
| 1¼ | 3 | – | – | 3 | 3 | 3 | 3 | 3 | 3 | 3 | 3 | 27 | 19.00 |
| 1½ | 3 | – | – | 3 | 3 | 3 | 3 | 3 | 3 | 3 | 3 | 27 | 23.00 |
| 2 | 3 | – | – | 3 | 3 | 3 | 3 | 3 | 3 | 3 | 3 | 27 | 30.00 |

All items ship in bulk quantities.

ASC Engineered Solutions

# Steel Pipe Nipples
## Welded – Ready Cut Pipe Standard – Schedule 40, XH Sch. 80

### Single Run Packs
(Black — Figure 339 & Galvanized — Figure 343)

| Nom. Pipe Size | Close | 1½" | 2" | 2½" | 3" | 3½" | 4" | 4½" | 5" | 5½" | 6" | No. of Pieces | Approx. Wt. Lbs. |
|---|---|---|---|---|---|---|---|---|---|---|---|---|---|
| ⅛ | 1 | 1 | 1 | 1 | 1 | 1 | 1 | 1 | 1 | 1 | 1 | 11 | 1.00 |
| ¼ | 1 | 1 | 1 | 1 | 1 | 1 | 1 | 1 | 1 | 1 | 1 | 11 | 1.50 |
| ⅜ | 1 | 1 | 1 | 1 | 1 | 1 | 1 | 1 | 1 | 1 | 1 | 11 | 2.00 |
| ½ | 1 | 1 | 1 | 1 | 1 | 1 | 1 | 1 | 1 | 1 | 1 | 11 | 2.50 |
| ¾ | 1 | 1 | 1 | 1 | 1 | 1 | 1 | 1 | 1 | 1 | 1 | 11 | 3.50 |
| 1 | 1 | – | 1 | 1 | 1 | 1 | 1 | 1 | 1 | 1 | 1 | 10 | 5.00 |
| 1¼ | 1 | – | 1 | 1 | 1 | 1 | 1 | 1 | 1 | 1 | 1 | 10 | 7.00 |
| 1½ | 1 | – | 1 | 1 | 1 | 1 | 1 | 1 | 1 | 1 | 1 | 10 | 8.00 |
| 2 | 1 | – | – | 1 | 1 | 1 | 1 | 1 | 1 | 1 | 1 | 9 | 10.00 |
| 2½ | 1 | – | – | – | 1 | 1 | 1 | 1 | 1 | 1 | 1 | 8 | 13.30 |
| 3 | 1 | – | – | – | 1 | 1 | 1 | 1 | 1 | 1 | 1 | 8 | 15.80 |

All items ship in bulk quantities.

### Single Run Packs
(Black Only Extra Heavy — Figure 338)

| Nom. Pipe Size | Close | 1½" | 2" | 2½" | 3" | 3½" | 4" | 4½" | 5" | 5½" | 6" | No. of Pieces | Approx. Wt. Lbs. |
|---|---|---|---|---|---|---|---|---|---|---|---|---|---|
| ½ | 1 | 1 | 1 | 1 | 1 | 1 | 1 | 1 | 1 | 1 | 1 | 11 | 3.20 |
| ¾ | 1 | 1 | 1 | 1 | 1 | 1 | 1 | 1 | 1 | 1 | 1 | 11 | 4.30 |
| 1 | 1 | – | 1 | 1 | 1 | 1 | 1 | 1 | 1 | 1 | 1 | 10 | 6.10 |
| 1¼ | 1 | – | 1 | 1 | 1 | 1 | 1 | 1 | 1 | 1 | 1 | 10 | 8.40 |
| 1½ | 1 | – | 1 | 1 | 1 | 1 | 1 | 1 | 1 | 1 | 1 | 10 | 10.30 |
| 2 | 1 | – | – | 1 | 1 | 1 | 1 | 1 | 1 | 1 | 1 | 9 | 13.90 |

All items ship in bulk quantities.

### Ready Cut Pipe
(Black Extra Long— Figure 339 & Galvanized — Figure 343)

| Nom. Pipe Size | 18" | 24" | 30" | 36" | 42" | 48" | 54" | 60" | 66" | 72" |
|---|---|---|---|---|---|---|---|---|---|---|
| ⅛ | 5 | 5 | 5 | 5 | 5 | 5 | 5 | 5 | 5 | 5 |
| ¼ | 5 | 5 | 5 | 5 | 5 | 5 | 5 | 5 | 5 | 5 |
| ⅜ | 5 | 5 | 5 | 5 | 5 | 5 | 5 | 5 | 5 | 5 |
| ½ | 5 | 5 | 5 | 5 | 5 | 5 | 5 | 5 | 5 | 5 |
| ¾ | 5 | 5 | 5 | 5 | 5 | 5 | 5 | 5 | 5 | 5 |
| 1 | 3 | 3 | 3 | 3 | 3 | 3 | 3 | 3 | 3 | 3 |
| 1¼ | 3 | 3 | 3 | 3 | 3 | 3 | 3 | 3 | 3 | 3 |
| 1½ | 3 | 3 | 3 | 3 | 3 | 3 | 3 | 3 | 3 | 3 |
| 2 | 2 | 2 | 2 | 2 | 2 | 2 | 2 | 2 | 2 | 2 |

### Travel Trays
(Black — Figure 339 & Galvanized — Figure 343)

| Nom. Pipe Size | Close | 1½" | 2" | 2½" | 3" | 3½" | 4" | 4½" | 5" | 5½" | 6" | No. of Pieces | Approx. Wt. Lbs. |
|---|---|---|---|---|---|---|---|---|---|---|---|---|---|
| ½ | 6 | 6 | 6 | 6 | 6 | 6 | 6 | 6 | 6 | 6 | 6 | 66 | 15.00 |
| ¾ | 6 | 6 | 6 | 6 | 6 | 6 | 6 | 6 | 6 | 6 | 6 | 66 | 20.00 |
| 1 | 5 | – | 5 | 5 | 5 | 5 | 5 | 5 | 5 | 5 | 5 | 50 | 22.00 |

All items ship in bulk quantities.

ASC Engineered Solutions

# Special Design Pipe Nipples

Beck Pipe Nipples are available with a variety of options for customization. To order, begin by selecting the figure number, material, finish, and end treatments from the table below. Then, select the nominal pipe size and specify the length rounded to the nearest 1/16". Contact your ASC Engineered Solutions™ Representative for additional options.

| Fig. No. | Description | Material | | Finish | | End #1 | | End #2 | | NPS | Length |
|---|---|---|---|---|---|---|---|---|---|---|---|
| 320SD | Sch. 40 Seamless Nipple Special Design | A | ASTM A106 GR B | A | Plain with Zinc Phosphate Coating | A | NPT | A | NPT | 1/8 | Up to 24" Maximum Specify to the nearest 1/16" |
| | | B | ASTM A333 | B | Plain with Sandblasted Surface | B | PLN | B | PLN | 1/4 | |
| 330SD | Sch. 40 Seamless Nipple - Galvanized Special Design | A | ASTM A106 GR B | A | Hot Dip Galvanized per ASTM A153 | C | PSQ | C | PSQ | 3/8 | |
| | | B | ASTM A333 | B | Zinc Electroplated per ASTM B633 | D | PDB | D | PDB | 1/2 | |
| | | – | – | C | Zinc Electroplated with Yellow Chromate | E | ROE | E | ROE | 3/4 | |
| 325SD | XH/Sch. 80 Seamless Nipple Special Design | A | ASTM A106 GR B | A | Plain with Zinc Phosphate Coating | F | BEV | F | BEV | 1 | |
| | | B | ASTM A333 | B | Plain with Sandblasted Surface | G | NPL | G | NPL | 1 1/4 | |
| 335SD | XH/Sch. 80 Seamless Nipple - Galvanized Special Design | A | ASTM A106 GR B | A | Hot Dip Galvanized per ASTM A153 | H | NPM | H | NPM | 1 1/2 | |
| | | B | ASTM A333 | B | Zinc Electroplated per ASTM B633 | I | ISO | I | ISO | 2 | |
| | | – | – | C | Zinc Electroplated with Yellow Chromate | J | GRV | J | GRV | 2 1/2 | |
| 326SD | Sch. 160 Seamless Nipple Special Design | A | ASTM A106 GR B | A | Plain with Zinc Phosphate Coating | K | LHT | K | LHT | 3 | |
| | | B | ASTM A333 | B | Plain with Sandblasted Surface | | | | | 4 | |
| 333SD | Sch. 160 Seamless Nipple - Galvanized Special Design | A | ASTM A106 GR B | A | Hot Dip Galvanized per ASTM A153 | | | | | 5 | |
| | | B | ASTM A333 | B | Zinc Electroplated per ASTM B633 | | | | | 6 | |
| | | – | – | C | Zinc Electroplated with Yellow Chromate | | | | | | |
| 327SD | XXH Seamless Nipple Special Design | A | ASTM A106 GR B | A | Plain with Zinc Phosphate Coating | | | | | | |
| | | B | ASTM A333 | B | Plain with Sandblasted Surface | | | | | | |
| 329SD | XXH Seamless Nipple - Galvanized Special Design | A | ASTM A106 GR B | A | Hot Dip Galvanized per ASTM A153 | | | | | | |
| | | B | ASTM A333 | B | Zinc Electroplated per ASTM B633 | | | | | | |
| | | – | – | C | Zinc Electroplated with Yellow Chromate | | | | | | |
| 339SD | Sch. 40 Welded Nipple Special Design | A | ASTM A53, Type F, CW | A | Plain with Zinc Phosphate Coating | | | | | | |
| | | B | ASTM A53, Type E, EW | B | Plain with Sandblasted Surface | | | | | | |
| 343SD | Sch. 40 Welded Nipple - Galvanized Special Design | A | ASTM A53, Type F, CW | A | Hot Dip Galvanized per ASTM A153 | | | | | | |
| | | B | ASTM A53, Type E, EW | B | Zinc Electroplated per ASTM B633 | | | | | | |
| | | – | – | C | Zinc Electroplated with Yellow Chromate | | | | | | |
| 338SD | XH/Sch. 80 Welded NippleSpecial Design | A | ASTM A53, Type F, CW | A | Plain with Zinc Phosphate Coating | | | | | | |
| | | B | ASTM A53, Type E, EW | B | Plain with Sandblasted Surface | | | | | | |
| 342SD | XH/Sch. 80 Welded Nipple - Galvanized Special Design | A | ASTM A53, Type F, CW | A | Hot Dip Galvanized per ASTM A153 | | | | | | |
| | | B | ASTM A53, Type E, EW | B | Zinc Electroplated per ASTM B633 | | | | | | |
| | | – | – | C | Zinc Electroplated with Yellow Chromate | | | | | | |
| 341SD | Tank Nipple - Sch. 40 Welded Special Design | A | ASTM A53, Type E, EW | A | Plain with Zinc Phosphate Coating | | | | | | |
| | | | | B | Plain with Sandblasted Surface | | | | | | |
| | | | | C | Zinc Electroplated per ASTM B633 | | | | | | |
| | | | | D | Zinc Electroplated with Yellow Chromate | | | | | | |
| 344SD | **Butt Nipple - Sch. 40 Welded Special Design | A | ASTM A53, Type F, CW | A | Plain with Zinc Phosphate Coating | | | | | | |
| | | | | B | Plain with Sandblasted Surface | | | | | | |
| | | B | ASTM A53, Type E, EW | C | Zinc Electroplated per ASTM B633 | | | | | | |
| | | | | D | Zinc Electroplated with Yellow Chromate | | | | | | |
| 345SD | Mining Nipple - Sch. 40 Welded Special Design | A | ASTM A53, Type E, EW | A | Plain with Zinc Phosphate Coating | | | | | | |
| | | | | B | Plain with Sandblasted Surface | | | | | | |
| | | | | C | Zinc Electroplated per ASTM B633 | | | | | | |
| | | | | D | Zinc Electroplated with Yellow Chromate | | | | | | |
| 362SD | Special Design Seamless Nipple Brass & Chromium Plated Brass | A | ASTM B43 Brass | A | Plain | | | | | | |
| | | | | B | Chrome Plated | | | | | | |
| 363SD | Special Design Grooved Adapter Nipple - Aluminum & Brass | A | ASTM B43 Brass | A | Plain | | | | | | |
| | | | | B | Chrome Plated | | | | | | |

**End Codes**

| | |
|---|---|
| NPT | Standard NPT Thread per ASME B1.20.1 (RH) (TOE) |
| PLN | Plain End/Roller Cut |
| PSQ | Plain End with Square or Saw Cut |
| PDB | Plain End with Square Cut and Deburred |
| ROE | Ream One End - Square Cut End with Ream |
| BEV | Square Cut End with 37½° Bevel |
| NPL | NPSL Straight Thread per ASME B1.20.1 (Locknut) (Toe) |
| NPM | NPSM Straight Thread per ASME B.1.20.1 (Mechanical) (Toe) |
| ISO | ISO/BSPT Taper Threads per ISO 7/1 |
| GRV | Cut Grooved End per ASC Specification |
| LHT | NPT-LH / Left Handed NPT Thread per ASME B.1.20.1 (TOE) |

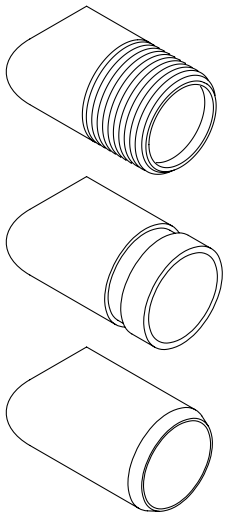

** NPS and lengths available POA, upon request. Contact your ASC Engineered Solutions™ Representative for details.

ASC Engineered Solutions

# Special Design Pipe Nipples

## Tank Nipples

Fig. 341SD – Black & Galvanized

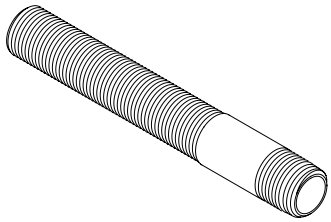

**Description**

Tank Nipples are recommended for use as tank legs, not intended for pressure service. Tank Nipples have standard NPT threads on one end and straight NPSM threads running for 4" on the other end. Tank Nipples are fabricated from ASTM A53 Schedule 40 welded pipe.

| Size | Length | Weight |
|---|---|---|
| 1/8 | 6 | 0.13 |
| 1/4 | 6 | 0.20 |
| 3/8 | 6 | 0.28 |
| 1/2 | 6 | 0.40 |
| 3/4 | 6 | 0.53 |
| 1 | 6 | 0.76 |
| 1 1/4 | 6 | 1.04 |
| 1 1/2 | 6 | 1.28 |
| 2 | 6 | 1.56 |

All Tank Nipples ship in quantities of 25. Not intended for pressure service.

## Butt Nipples

Fig. 344SD – Black & Galvanized

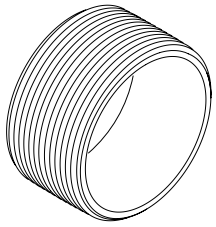

**Description**

Butt Nipples are intended for joining couplings or female threaded components end to end without exposing male threads. Butt Nipples have standard NPT male threads on both ends. Threads may have fewer imperfect threads due to reduced nipple length. Butt Nipples are fabricated from ASTM A53 Schedule 40 welded pipe.

| Size | Length | Weight | Quantity |
|---|---|---|---|
| 2 | 1 1/4 | 0.28 | 25 |
| 2 1/2 | 2 | 0.87 | 10 |
| 3 | 2 | 1.28 | 10 |
| 4 | 2 1/4 | 1.11 | 5 |

## Right & Left Nipples

Black — Figure 339SD & Galvanized — Figure 343SD

| Nom. Pipe Size | Length | Weight | Quantity |
|---|---|---|---|
| 1/8 | 4" or 6" | 0.09 | - |
| 1/4 | 4" or 6" | 0.13 | - |
| 3/8 | 4" or 6" | 0.18 | 25 |
| 1/2 | 4" or 6" | 0.25 | 25 |
| 3/4 | 4" or 6" | 0.35 | 25 |
| 1 | 4" or 6" | 0.51 | 25 |
| 1 1/4 | 4" or 6" | 0.68 | 25 |
| 1 1/2 | 4" or 6" | 0.80 | 25 |
| 2 | 4" or 6" | 1.09 | 25 |
| 2 1/2 | 4" or 6" | 1.50 | - |
| 3 | 4" or 6" | 2.00 | - |
| 3 1/2 | 4" or 6" | 2.80 | - |
| 4 | 4" or 6" | 3.24 | - |

## General Assembly of Threaded Fittings

### 1. Inspect both male and female components prior to assembly.

- Threads should be free from mechanical damage, dirt, chips and excess cutting oil.
- Clean or replace components as necessary.

### 2. Application of thread sealant

- Use a thread sealant that is fast drying, sets-up to a semi hard condition and is vibration resistant. Alternately, an anaerobic sealant may be utilized.
- Thoroughly mix the thread sealant prior to application.
- Apply a thick even coat to the male threads only. Best application is achieved with a brush stiff enough to force sealant down to the root of the threads.

### 3. Joint Makeup

- For sizes up to and including 2" pipe, wrench tight makeup is considered three full turns past handtight. Handtight engagement for 1/2" through 2" thread varies from 4 1/2 turns to 5 turns.
- For 2 1/2" through 4" sizes, wrench tight makeup is considered two full turns past handtight. Handtight engagement for 2 1/2" through 4" thread varies from 5 1/2 turns to 6 3/4 turns.

BECK An ASC Engineered Solution