canplas PLUMBING

Submittal Sheet

Part Description:

2" PVC WHITE DWV Long Sweep Bend or Elbow H X H

Part Number:

192277

Approvals and Listings maintained by:
Canplas Industries Ltd
Canada: 1-800-461-5300 USA: 1-888-461-5307

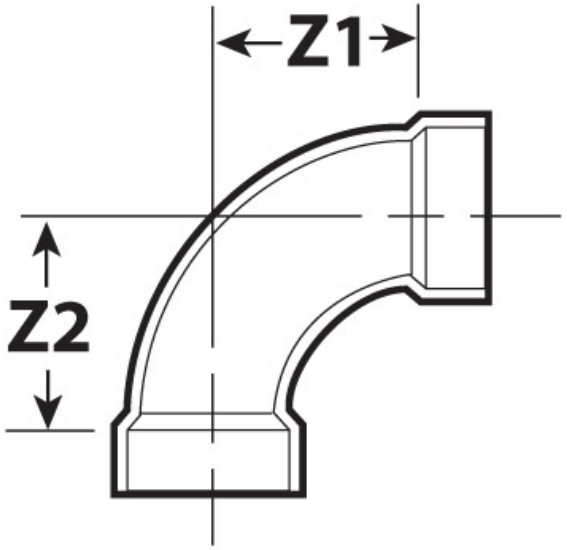

Part #	Part UPC	Colour	Size (inches)	Ctn Qty	Ctn Bar Code	Ctn. Wt (Kgs)	Ctn. Wt (lbs)	Skid Cubic (m)	Skid Cubic (ft)	Ctns/Skid
192277	662671190147	WHITE	2X2	45	10662671190144	9.00	19.80	1.86	65.82	32

Dimensions (inches)

Z1	Z2
3.05	3.05