canplas PLUMBING

Submittal Sheet

Part Description:

2" X 2" X 2" X 2" PVC WHITE DWV Double Fixture Fitting H X H X H X H

Part Number:

194153

Approvals and Listings maintained by:
Canplas Industries Ltd
Canada: 1-800-461-5300 USA: 1-888-461-5307

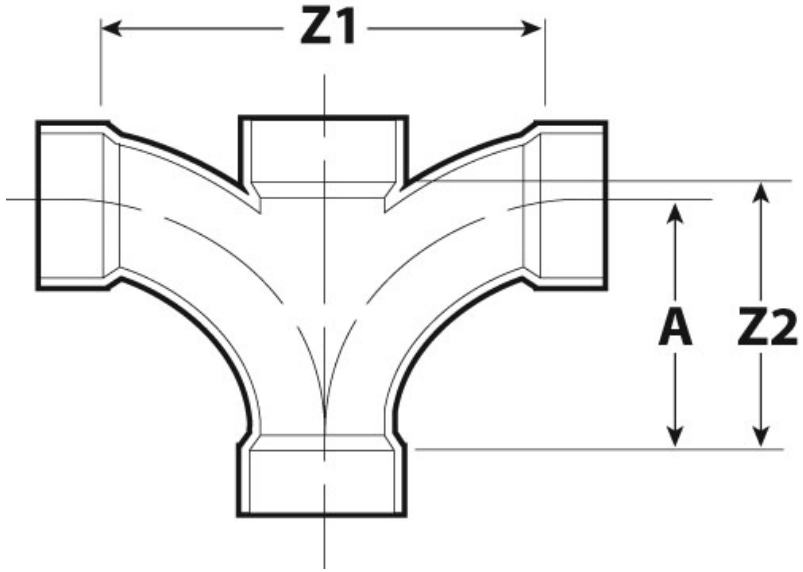

Part #	Part UPC	Colour	Size (inches)	Ctn Qty	Ctn Bar Code	Ctn. Wt (Kgs)	Ctn. Wt (lbs)	Skid Cubic (m)	Skid Cubic (ft)	Ctns/Skid
194153	662671192936	WHITE	2X2X2X2	10	10662671192933	5.03	11.07	1.79	63.37	48

Dimensions (inches)

A	Z1	Z2
4.26	7.01	4.61