canplas PLUMBING

Submittal Sheet

Part Description:

3" PVC WHITE DWV 45 Degree or 1/8 Long Turn Street Bend or Elbow Spigot X H

Part Number:

192403

Approvals and Listings maintained by:
Canplas Industries Ltd
Canada: 1-800-461-5300 USA: 1-888-461-5307

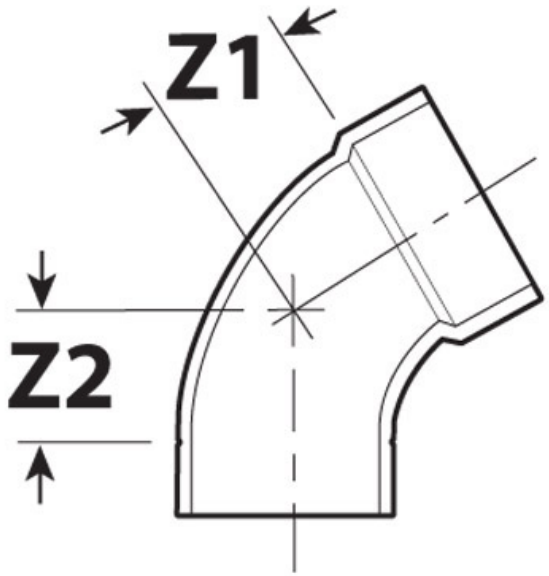

Part #	Part UPC	Colour	Size (inches)	Ctn Qty	Ctn Bar Code	Ctn. Wt (Kgs)	Ctn. Wt (lbs)	Skid Cubic (m)	Skid Cubic (ft)	Ctns/Skid
192403	662671191342	WHITE	3X3	20	10662671191349	8.62	18.96	1.86	65.82	32

Dimensions (inches)

Z1	Z2
1.67	1.78