Building connections that last™

ASC™ Engineered Solutions

Series 9121 & Series 9122

PVC Ball Valve, Threaded & Slip Datasheet

SCI® An ASC Engineered Solution

PVC Ball Valve, Slip
Series 9122

Design Features

- Schedule 40/80 PVC
- IPS
- 150 psi @ 73°F
- Molded in place construction
- White with blue handle
- EPDM O-ring
- Santoprene seat

Parts & Materials

No.	Part	Material
1	Cap	ABS
2	Handle	ABS
3	O-Ring	EPDM
4	O-Ring	EPDM
5	Seat	PTFE
6	Ball	PVC & ABS
7	Body	PVC

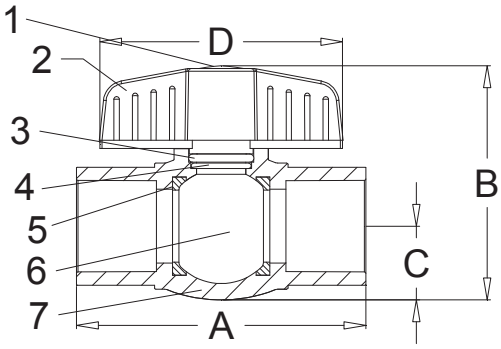

Dimensions

Size	Part Number	Weight	A	B	C	D
In		Lb	In	In	In	In
½	02939122G	0.2	3.16	2.46	0.71	2.74
¾	02939122I	0.2	3.61	2.98	0.87	3.01
1	02939122K	0.4	4.19	3.39	1.06	3.53
1-¼	02939122L	0.5	4.76	3.80	1.21	3.54
1-½	02939122M	0.8	5.13	4.32	1.46	4.42
2	02939122N	1.4	5.93	5.36	1.83	5.53
2-½	02939122P	3.7	7.48	7.68	2.26	7.09
3	02939122Q	5.6	8.66	8.86	2.66	9.05
4	02939122T	6.3	10.24	10.24	3.35	10.04

An ASC Engineered Solution