SMITH®
CUSTOMER DRIVEN

Jay R. Smith Mfg. Co.
Wholesaler's Parts Order Number Guide

5509QT

PART	DESCRIPTION	ITEM NUMBER
3	Hydrant Key	5609QT-PART03
7	Face Nut	5609QT-PART07
	Cover Assembly f/SS Box (Incl Lk Dev)	5509QTCASS
	Cover Assembly f/NB Box (Incl Lk Dev)	5509QTCANB
	Cover Assembly f/PB Box (Incl Lk Dev)	5509QTCAPB
10	Operator Rod for Short as Possible	73790-80-60-014
10	Operator Rod for 4" Wall	73790-80-40-044
10	Operator Rod for 6" Wall	73790-80-40-064
10	Operator Rod for 8" Wall	73790-80-40-084
10	Operator Rod for 10" Wall	73790-80-40-104
10	Operator Rod for 12" Wall	73790-80-40-124
10	Operator Rod for 14" Wall	73790-80-40-144
10	Operator Rod for 16" Wall	73790-80-40-164
10	Operator Rod for 18" Wall	73790-80-40-184
11	Face Nut Washer	5609QT-PART11
*	Face Nut Wrench	5500FNW
12	Wall Clamp	5609QT-WC
	Repair Kit for Vacuum Breaker	HPRK-7VB
	Repair Kit f/Hydrant	HPRK-7

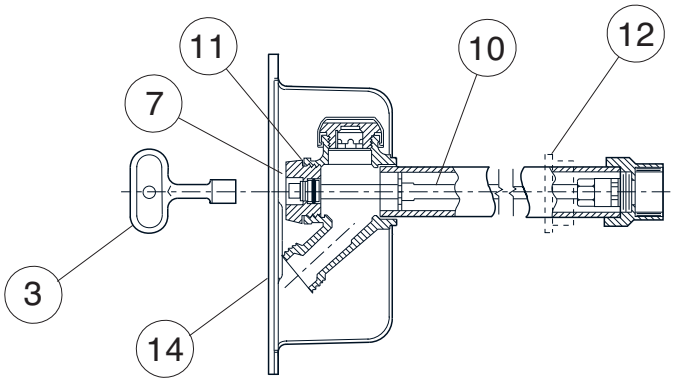

5609QT

Jay R. Smith Mfg. Co.
Wholesaler's Parts Order Number Guide

PART	DESCRIPTION	ITEM NUMBER
3	Hydrant Key	5609QT-PART03
7	Face Nut	5609QT-PART07
10	Operator Rod for Short as Possible	73790-80-60-014
10	Operator Rod for 4" Wall	73790-80-40-044
10	Operator Rod for 6" Wall	73790-80-40-064
10	Operator Rod for 8" Wall	73790-80-40-084
10	Operator Rod for 10" Wall	73790-80-40-104
10	Operator Rod for 12" Wall	73790-80-40-124
10	Operator Rod for 14" Wall	73790-80-40-144
10	Operator Rod for 16" Wall	73790-80-40-164
10	Operator Rod for 18" Wall	73790-80-40-184
11	Face Nut Washer	5609QT-PART11
*	Face Nut Wrench	5500FNW
12	Wall Clamp	5609QT-WC
14	Backer Plate Kit, NB	5609QT-BPKNP
14	Backer Plate Kit, PB	5609QT-BPKPB
14	Backer Plate Kit, CP	5609QT-BPKCP
	Repair Kit for Vacuum Breaker	HPRK-7VB
	Repair Kit f/Hydrant	HPRK-7
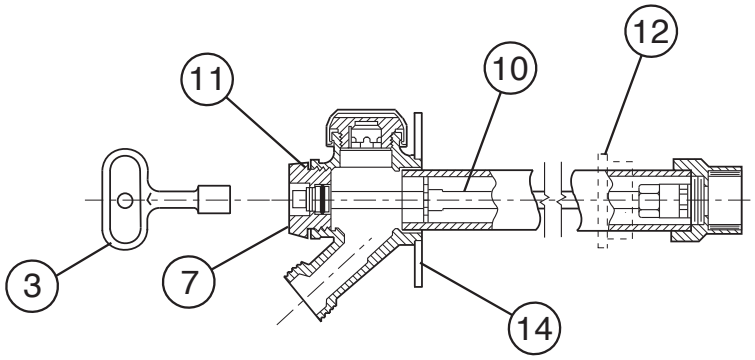
*Available, but not shown