canplas PLUMBING

Submittal Sheet

Part Description:

2" PVC WHITE DWV 1/16 or 22-1/2 Degree Street Bend or Elbow Spigot X H

Part Number:

192562

Approvals and Listings maintained by:
Canplas Industries Ltd
Canada: 1-800-461-5300 USA: 1-888-461-5307

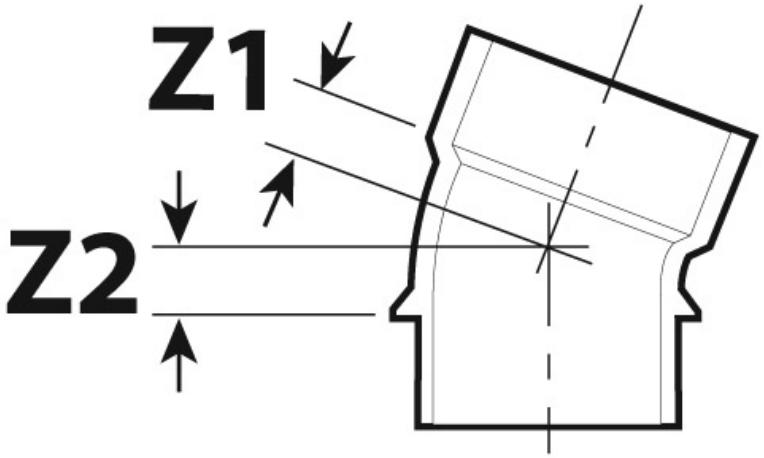

Part #	Part UPC	Colour	Size (inches)	Ctn Qty	Ctn Bar Code	Ctn. Wt (Kgs)	Ctn. Wt (lbs)	Skid Cubic (m)	Skid Cubic (ft)	Ctns/Skid
192562	662671191663	WHITE	2X2	45	10662671191660	4.40	9.68	1.79	63.37	72

Dimensions (inches)

Z1	Z2
0.71	0.59