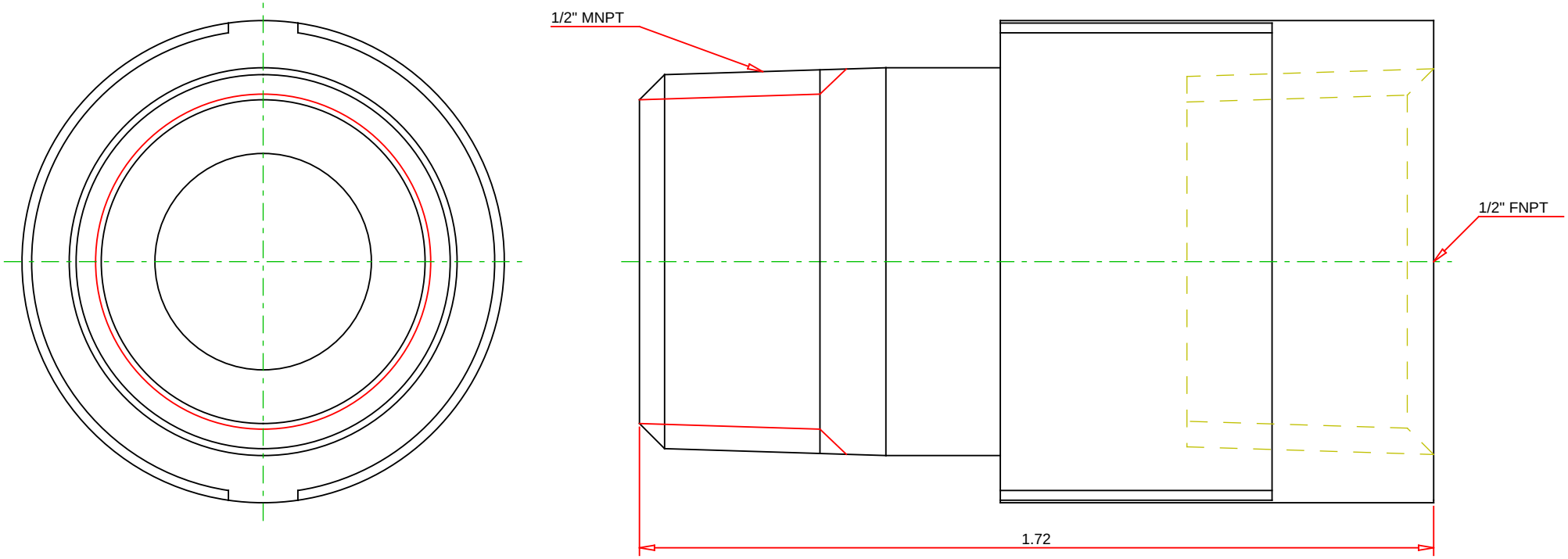

Note :
- Drawing is not to Scale.
- Dimensions are subject to change.
- All dimensions are in Inches and are for Reference Only.

Part Name:
1/2-3138_Imp-Galvanized

Product No:
4316010600

Description:
3138 1/2 GALV IMI EXTENSION PIECE

ASC Engineered Solutions

Email: marketing@asc-es.com

Website: https://www.asc-es.com/

Date: 13-SEP-2022