canplas PLUMBING

Submittal Sheet

Part Description:

4" X 4" X 4" ABS DWV Single Long Turn Tee Wye

Part Number:

104304

Approvals and Listings maintained by:
Canplas Industries Ltd
Canada: 1-800-461-5300 USA: 1-888-461-5307

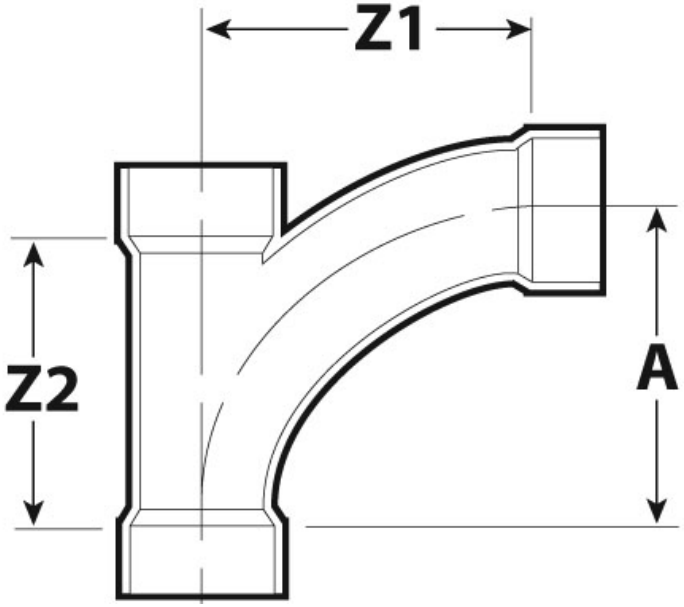

Part #	Part UPC	Colour	Size (inches)	Ctn Qty	Ctn Bar Code	Ctn. Wt (Kgs)	Ctn. Wt (lbs)	Skid Cubic (m)	Skid Cubic (ft)	Ctns/Skid
104304	662671107619	BLACK	4X4X4	5	10662671107616	8.16	17.95	1.90	67.04	18

Dimensions (inches)

A	Z1	Z2
9.92	9.93	8.44