canplas PLUMBING

Submittal Sheet

Part Description:

1-1/2" ABS DWV Long Sweep Bend or Elbow H X H

Part Number:

102276

Approvals and Listings maintained by:
Canplas Industries Ltd
Canada: 1-800-461-5300 USA: 1-888-461-5307

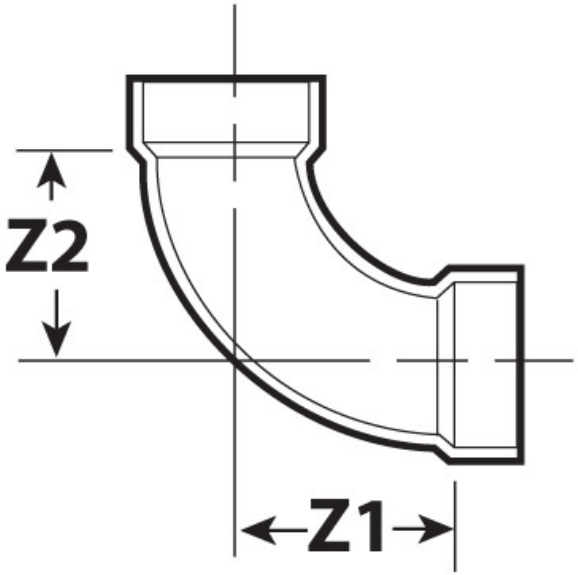

Part #	Part UPC	Colour	Size (inches)	Ctn Qty	Ctn Bar Code	Ctn. Wt (Kgs)	Ctn. Wt (lbs)	Skid Cubic (m)	Skid Cubic (ft)	Ctns/Skid
102276	662671100559	BLACK	1-1/2X1-1/2	50	10662671100556	5.17	11.37	1.79	63.37	48

Dimensions (inches)

Z1	Z2
2.75	2.75