Table of Contents

Congratulations on purchasing your new Hunter® ceiling fan! It will provide comfort and performance in your home or office for many years. This installation and operation manual contains complete instructions for installing and operating your fan.

We are proud of our work and appreciate the opportunity to supply you with the best ceiling fan available anywhere in the world.

To register your fan, please visit:
www.HunterFan.com/register

Save your receipt for proof of purchase.

What to Expect with Your Installation

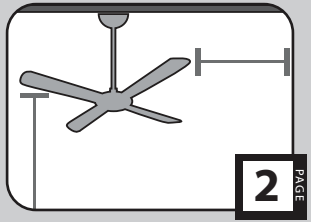

2 PAGE

Tools Needed

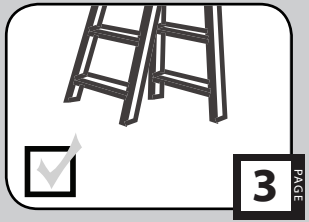

3 PAGE

Mounting Options

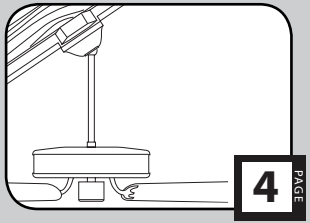

4 PAGE

Ceiling Bracket

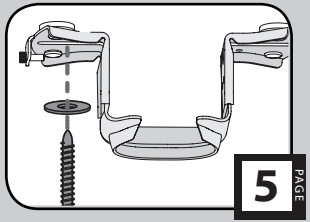

5 PAGE

Preparation

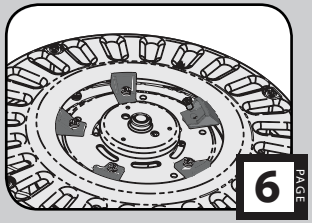

6 PAGE

Downrod

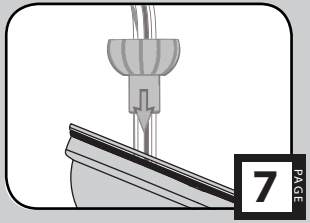

7 PAGE

Wiring

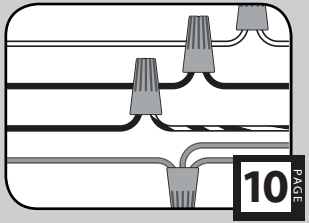

10 PAGE

Canopy

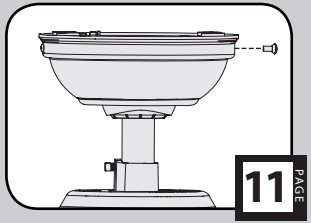

11 PAGE

Blades

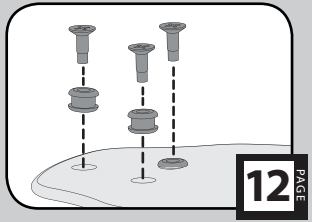

12 PAGE

Switch Housing

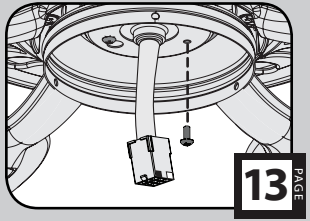

13 PAGE

Light Kit

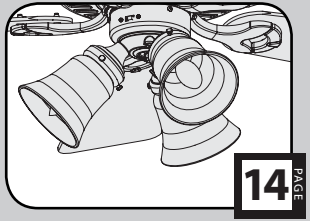

14 PAGE

Maintenance & Cleaning

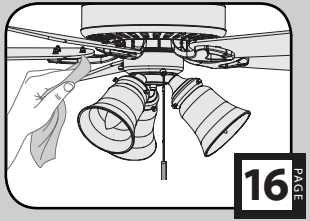

16 PAGE

Troubleshooting

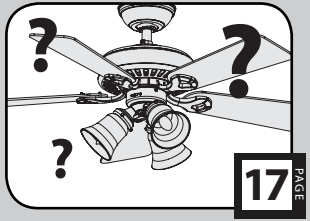

17 PAGE

M0002-01 • 06/25/15 • © 2012–2015 Hunter Fan Company

What to Expect with Your Installation

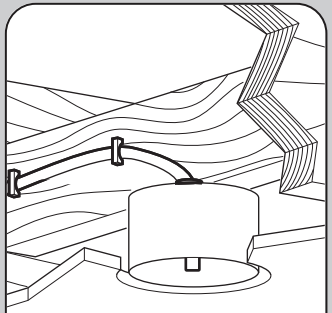

Must be able to secure the fan to building structure or fan-rated outlet box

If you are unfamiliar with wiring, use a qualified electrician.

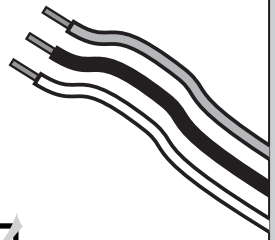

Know your wiring

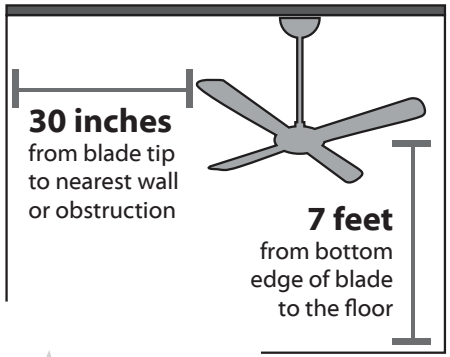

Assess location

You may need a friend to help you.

Check box to see fan weight

Ceiling angles greater than 34° will require an Angled Mounting Kit. See page 4 for details.

Assess ceiling angle

1 Standard Downrod
for ceilings 8-10 feet high

2 Shorter Downrod
for fans installed close to ceiling

3 Longer Downrod
for ceilings 10 feet or higher

Select a downrod length

Read and Save These Instructions

This product conforms to UL Standard 507.

⚠ WARNINGS

w.1 - To reduce the risk of fire, electrical shock, or personal injury, mount fan directly from building structure and/or an outlet box marked acceptable for fan support of 70 lbs (31.8 kg) and use the mounting screws provided with the outlet box.

w.2 - To avoid possible electrical shock, before installing or servicing your fan, disconnect the power by turning off the circuit breakers to the outlet box and associated wall switch location. If you cannot lock the circuit breakers in the off position, securely fasten a prominent warning device, such as a tag, to the service panel.

w.3 - To reduce the risk of fire, electrical shock, or motor damage, use only Hunter Solid State Speed Controls.

w.4 - To reduce the risk of personal injury, do not bend the blade brackets when installing the blade brackets, balancing the blades, or cleaning the fan. Do not insert foreign objects in between rotating fan blades.

⚠ CAUTIONS

c.1 - All wiring must be in accordance with national and local electrical codes ANSI/NFPA 70. If you are unfamiliar with wiring, use a qualified electrician.

c.2 - Use only Hunter replacement parts.

M0002-01 • 06/25/15 • © 2012–2015 Hunter Fan Company

Tools Needed

☑ Ladder

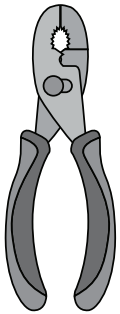

☑ Pliers

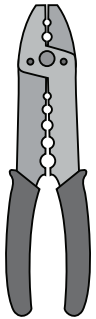

☑ Wire Strippers

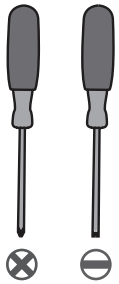

☑ Screwdrivers

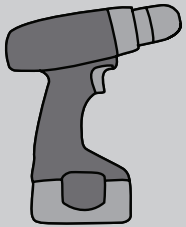

☐ Power Drill (optional)

☐ 9/64″ Drill Bit (optional)

If mounting to a support structure, you will also need these tools.

M0002-01 • 06/25/15 • © 2012–2015 Hunter Fan Company

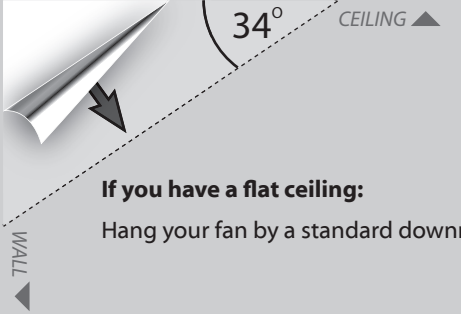

If you have a flat ceiling:

Hang your fan by a standard downrod *(included)*.

OPTION 1

If you have an angled ceiling:

1. You will need a longer downrod *(sold separately)*.
2. If your ceiling angle is greater than 34°, you will also need an Angled Mounting Kit *(sold separately)*.

OPTION 2

Use the three steps below to determine if your ceiling angle is greater than 34°

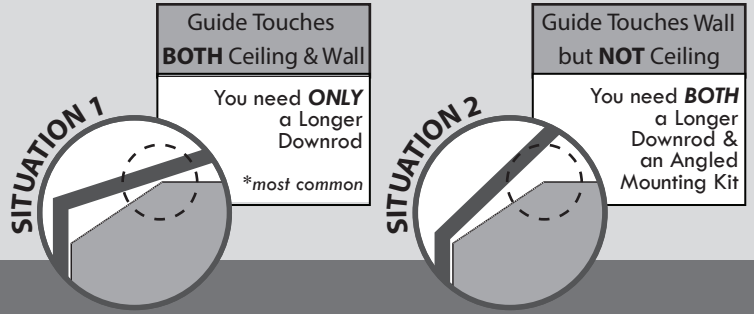

Mounting Options

www.HunterFan.com 1.888.830.1326

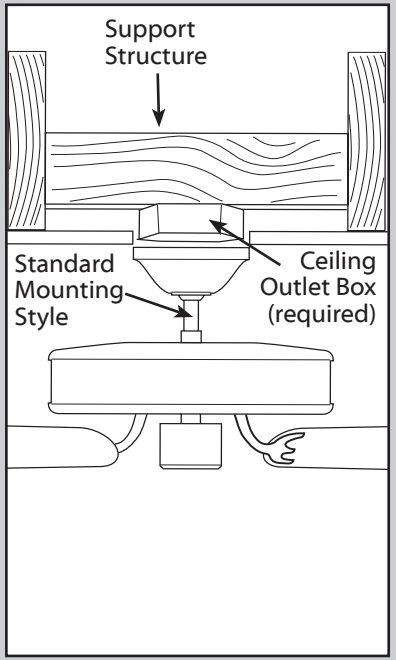

Use **Standard Mounting** or **Low-Profile Mounting** to hang the fan from a flat ceiling.

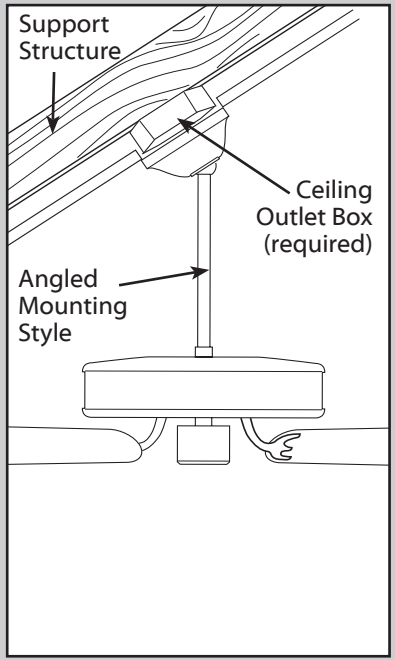

Use **Angled Mounting** to hang the fan from a vaulted or angled ceiling.

M0002-01 • 06/25/15 • © 2012–2015 Hunter Fan Company

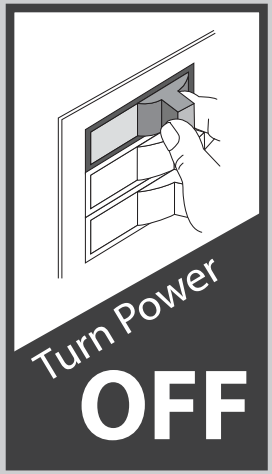

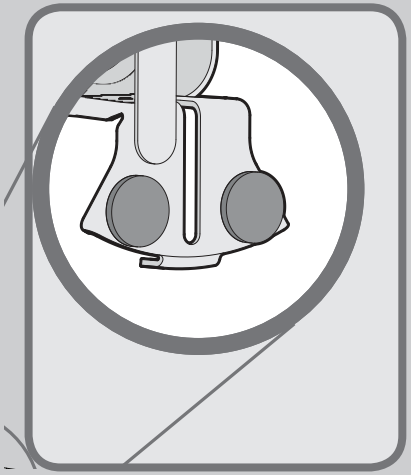

Make sure all four (4) bumpers are still attached.

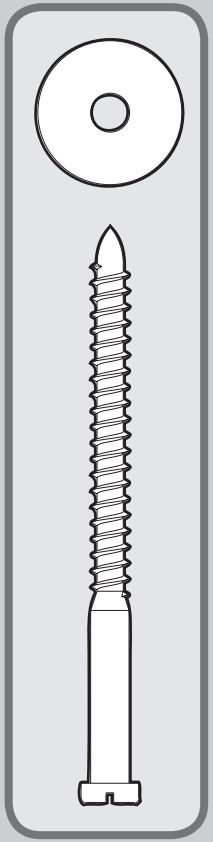

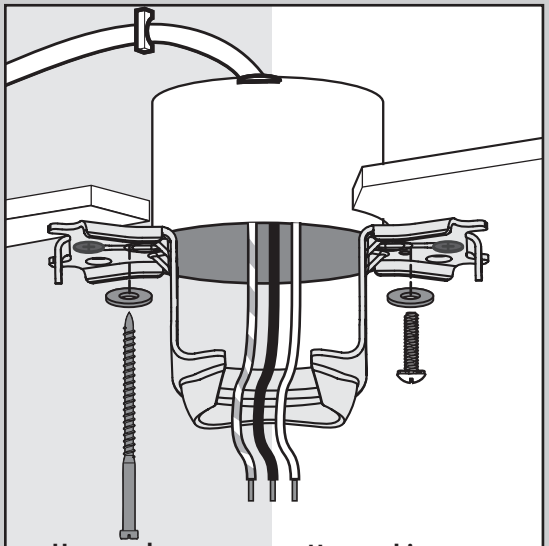

Use wood screws (included) when securing to support structure with approved electrical outlet box. Drill 9/64" pilot holes in support structure to aid in securing ceiling bracket with hardware found in the ★ hardware bag.

Use machine screws (provided with outlet box) when securing to existing ceiling fan-rated outlet box. Make sure it is securely installed and is acceptable for fan support of 31.8 kg (70 lbs) or less.

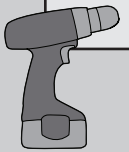

For angled ceilings, point opening toward peak.

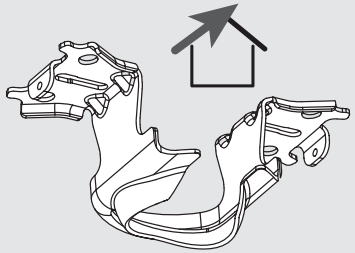

If you are unable to do this, call Technical Support at 1-888-830-1326.

To avoid possible electrical shock, before installing your fan, disconnect the power by turning off the circuit breakers to the outlet box associated with the wall switch location.

Refer to warning w.1 on pg. 2

M0002-01 • 06/25/15 • © 2012–2015 Hunter Fan Company

Ceiling Bracket (continued)

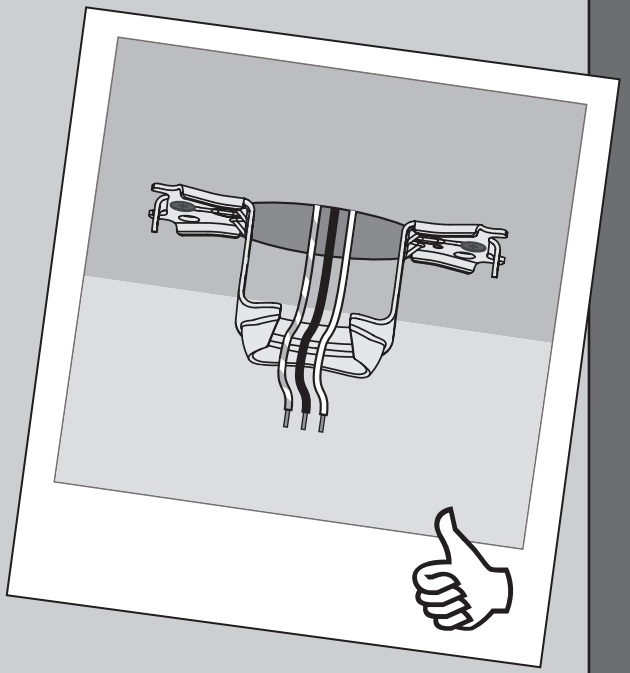

Preparation

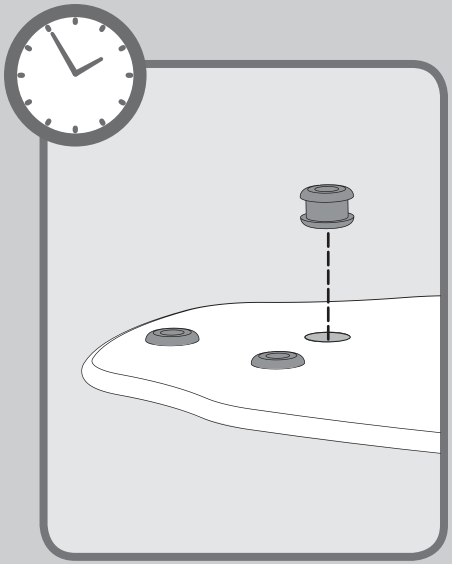

Time Saver Tip: Get a helper to insert grommets, found in the ■ hardware bag, into the blades while you're doing the next couple of steps.

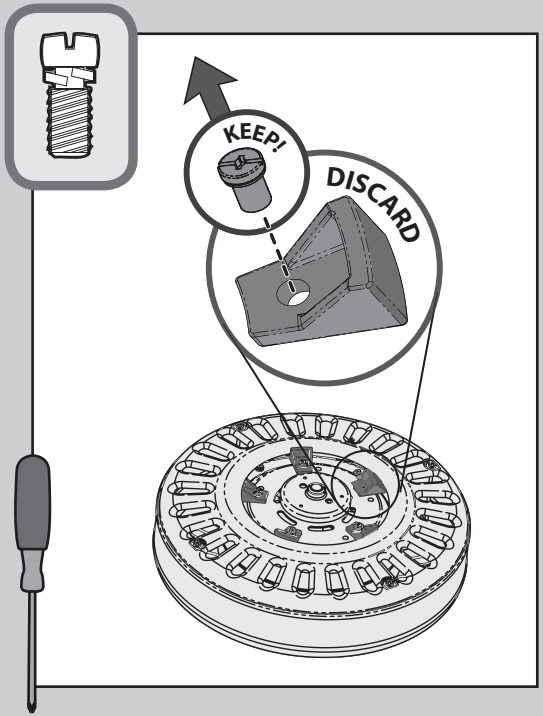

Remove the shipping blocks from the motor. **Save the screws. They will be needed for blade iron installation.**

Note: Some fans will have a shipping ring instead of shipping blocks. Please remove the ring and save the screws.

M0002-01 • 06/25/15 • © 2012–2015 Hunter Fan Company

Option 1

Standard Downrod
for ceilings 8-10' high

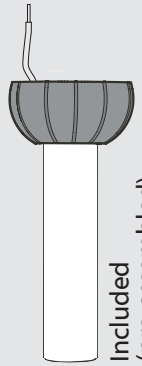

Included (pre-assembled)

skip to next page

Option 2

Shorter Downrod
for fans installed close to ceiling

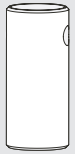

Included

Option 3

Longer Downrod
for angled ceilings or ceilings 10' or higher

Sold Separately

If you need a different downrod length follow these steps:

Steps 1-5 to remove standard downrod pipe

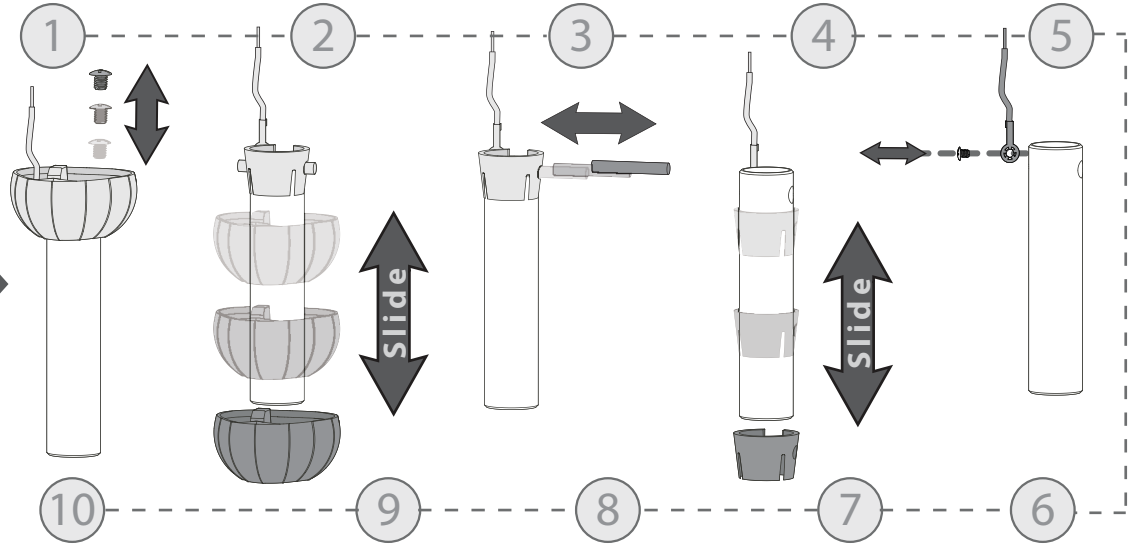

Steps 6-10 to reassemble with **new** pipe

M0002-01 • 06/25/15 • © 2012–2015 Hunter Fan Company

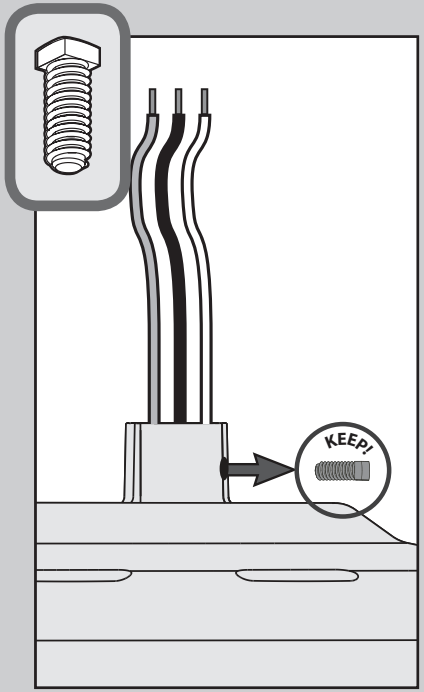

Remove the pre-installed setscrew so that the downrod can be inserted.

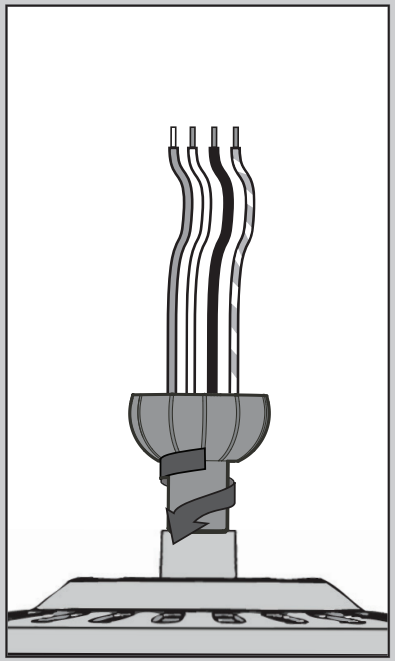

Hand tighten the downrod (at least 4-5 full turns) until it stops.

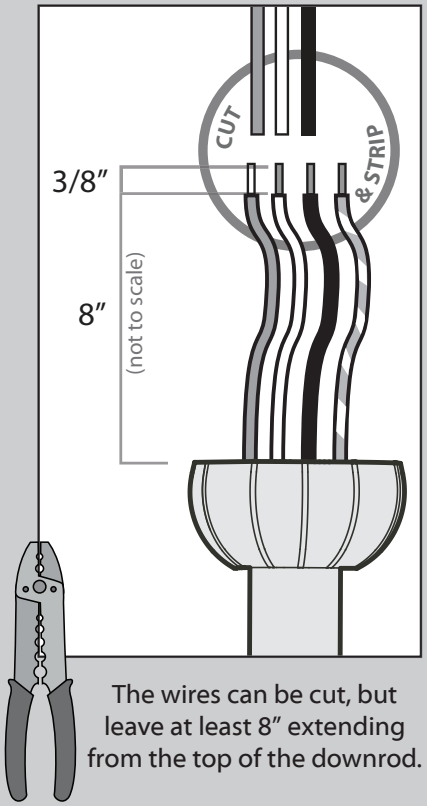

The wires can be cut, but leave at least 8″ extending from the top of the downrod.

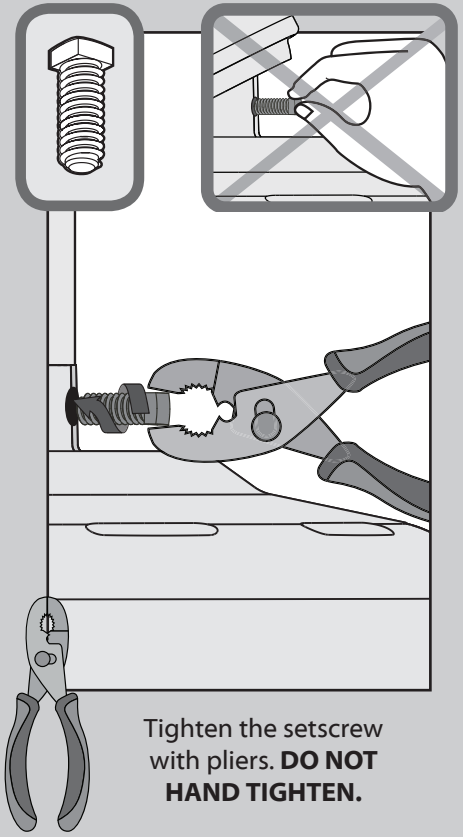

Tighten the setscrew with pliers. **DO NOT HAND TIGHTEN.**

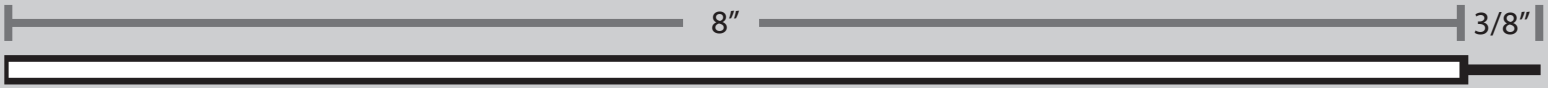

If the setscrew is not tightened securely, the fan may fall.

M0002-01 • 06/25/15 • © 2012–2015 Hunter Fan Company

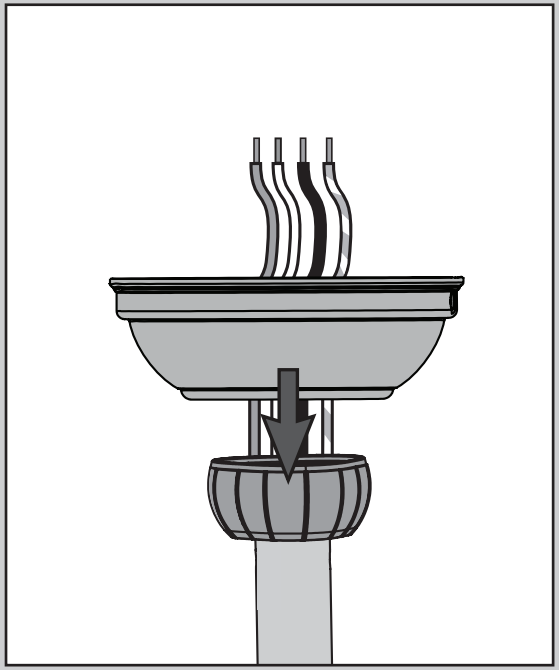

Put the wires and downrod through the canopy. Let the canopy sit loosely on top of the fan.

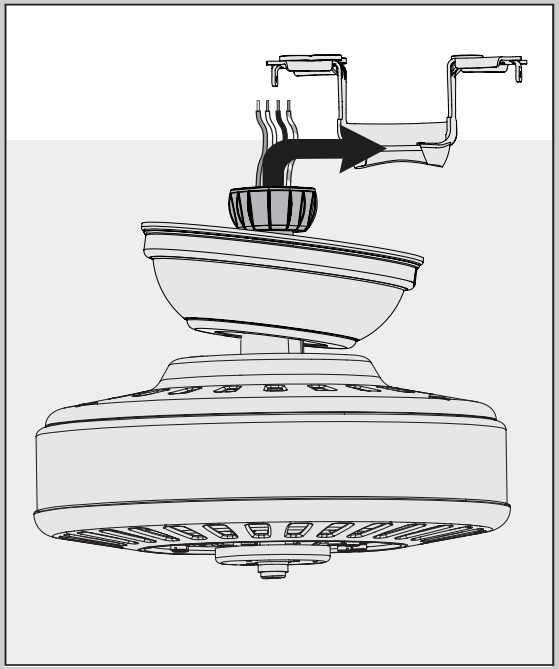

DO NOT PICK THE FAN UP BY THE CANOPY OR WIRES. Place the downrod ball into the slot in the ceiling bracket.

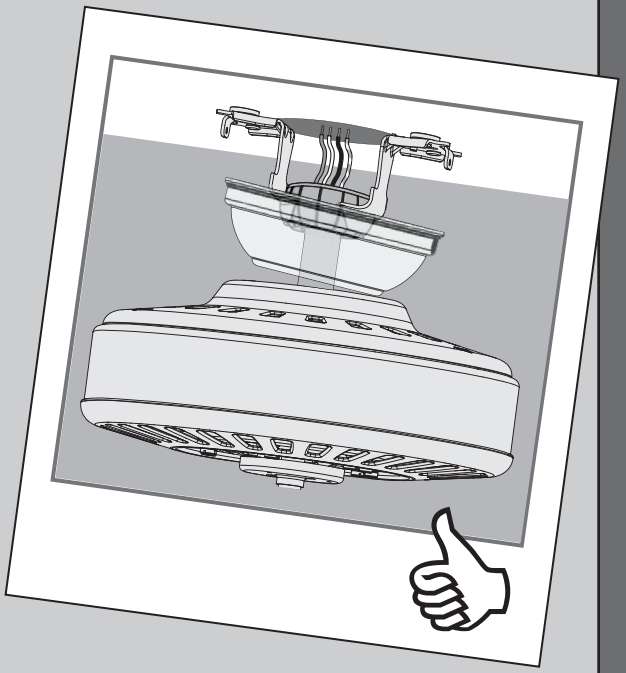

M0002-01 • 06/25/15 • © 2012–2015 Hunter Fan Company

Note: To connect the wires, hold the bare metal leads together and place a wire connector over them, then twist clockwise until tight.

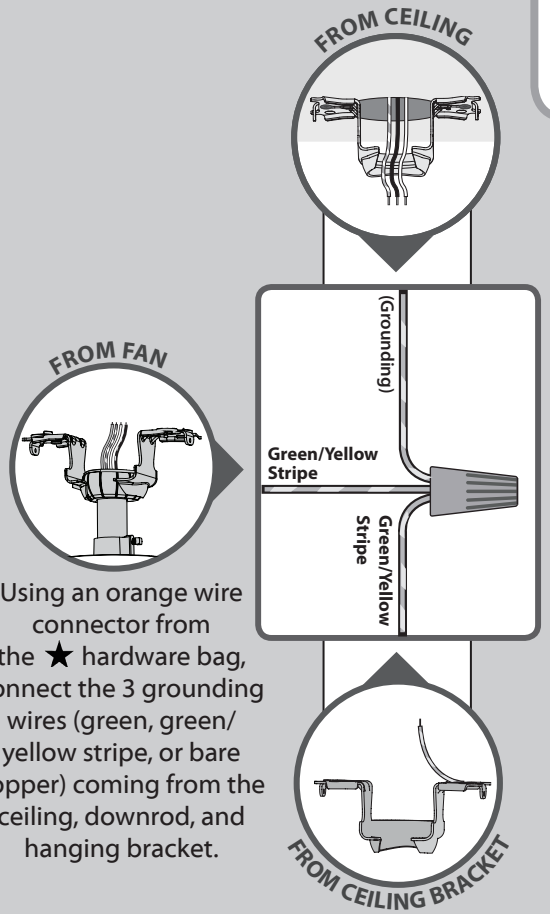

Using an orange wire connector from the ★ hardware bag, connect the 3 grounding wires (green, green/yellow stripe, or bare copper) coming from the ceiling, downrod, and hanging bracket.

For a Single Switch

Using the orange wire connectors from the ★ hardware bag, connect the black wire (ungrounded) from the ceiling to the black and the blue wires from the fan. Connect the white wire (grounded) from the ceiling to the white wire from the fan.

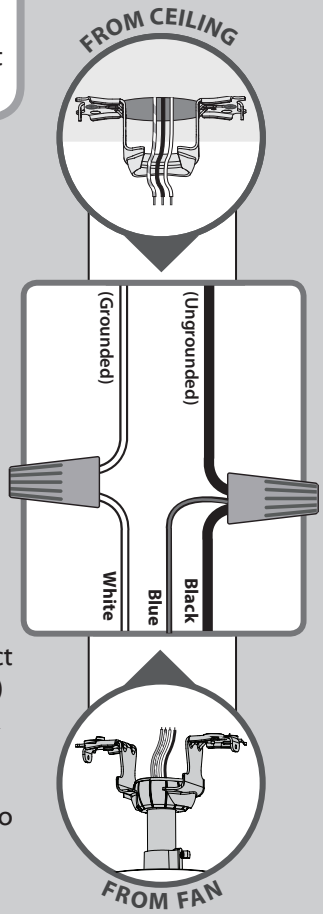

For Dual Switches

Using orange wire connectors from the ★ hardware bag, connect the white wire (grounded) from the ceiling to the white wire from the fan. Connect the black wire (ungrounded) from the ceiling to the black wire from the fan. Connect the second (ungrounded) wire from the ceiling to the blue wire from the fan.

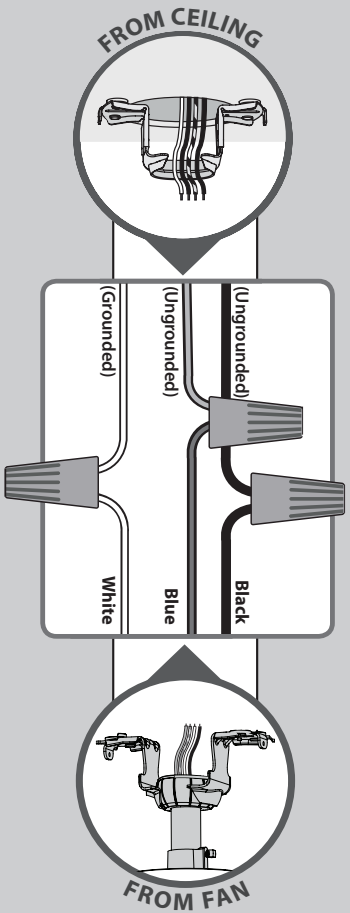

Turn the splices upward and push them carefully back through the hanger bracket into the outlet box. Spread the wires apart, with the grounded wires on one side of the outlet box and the ungrounded wires on the other side of the outlet box.

Refer to CAUTION c.1 on pg. 2

M0002-01 • 06/25/15 • © 2012–2015 Hunter Fan Company

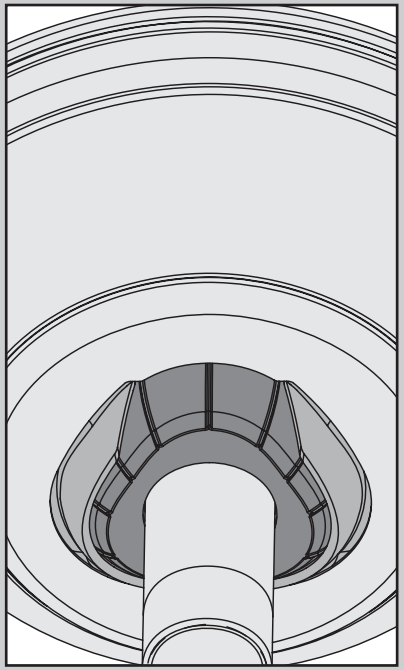

Position the canopy so that, when lifted into place, the canopy fits into the hanging bracket as shown.

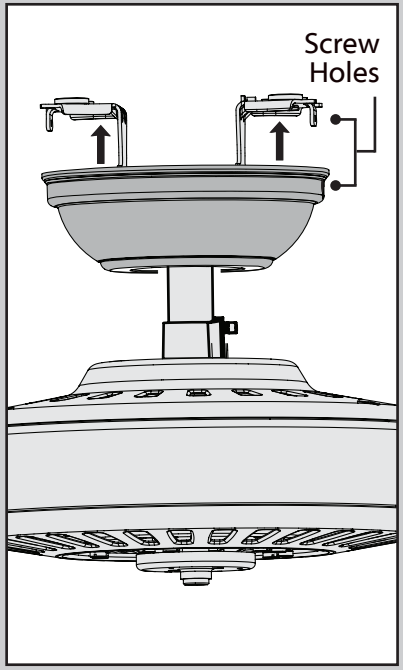

Lift the canopy into place so that the screw holes are aligned.

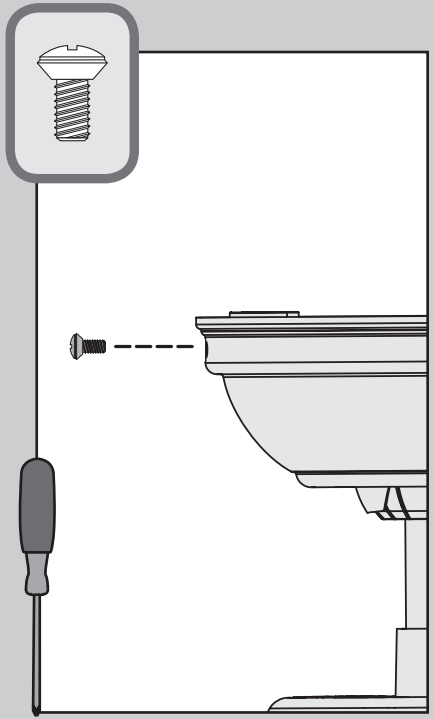

⊗ Insert the two canopy screws found in the ● hardware bag.

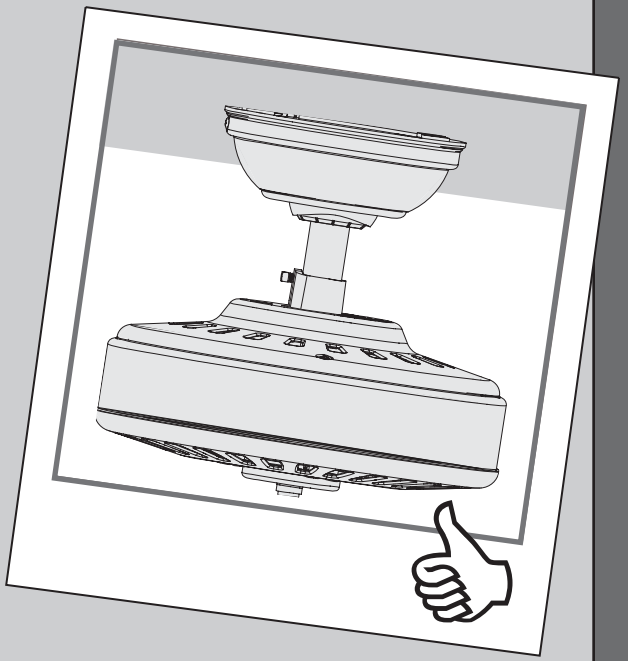

Note: Fan style may vary.

M0002-01 • 06/25/15 • © 2012–2015 Hunter Fan Company

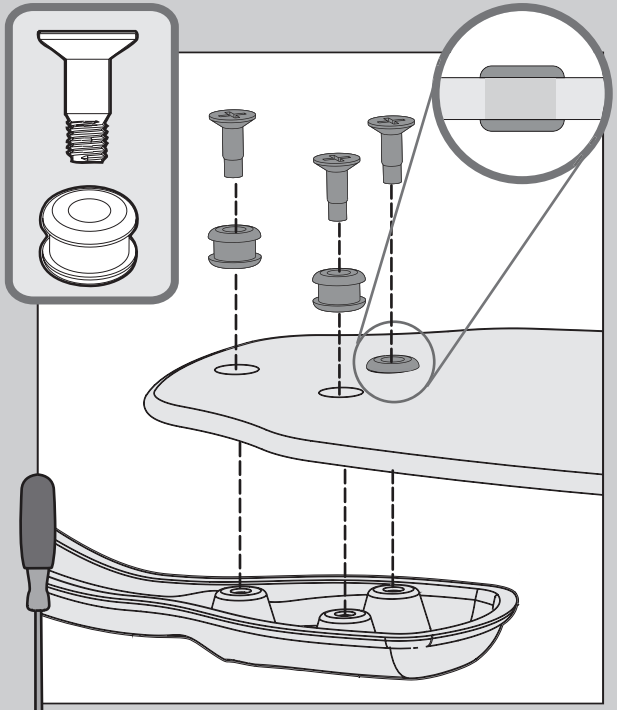

Insert grommets found in the ■ hardware bag into the holes in the blades, then secure each blade to a blade iron with screws found in the ▲ hardware bag.

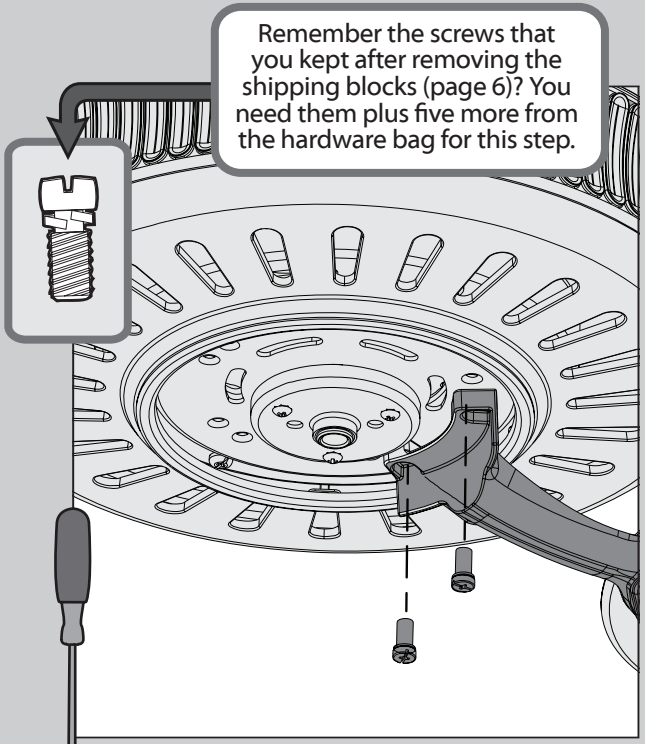

Lightly attach the blade irons to the motor with screws found in the ⧖ hardware bag, then securely tighten after both screws are attached.

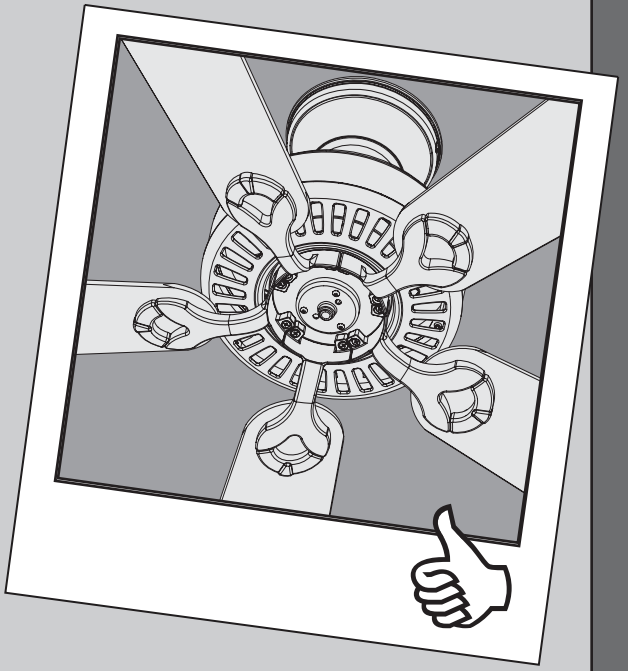

M0002-01 • 06/25/15 • © 2012–2015 Hunter Fan Company

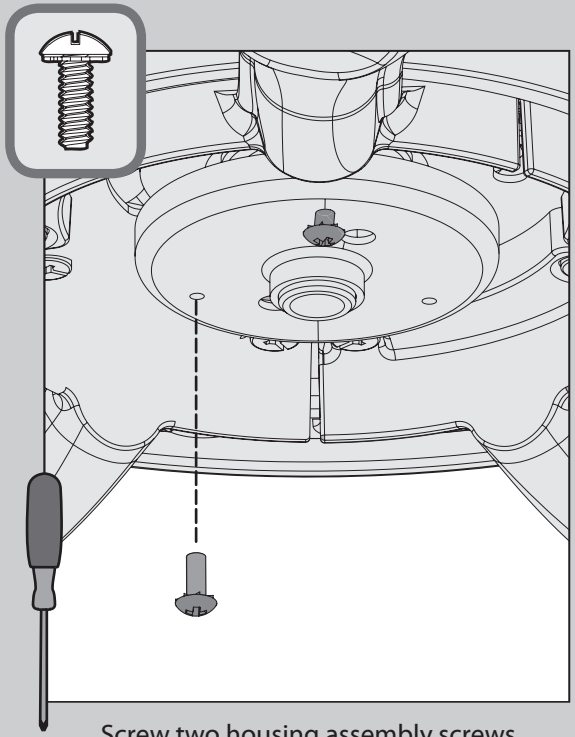

Screw two housing assembly screws from the ≡ hardware bag halfway into the motor housing. It does not matter which two screw holes you choose.

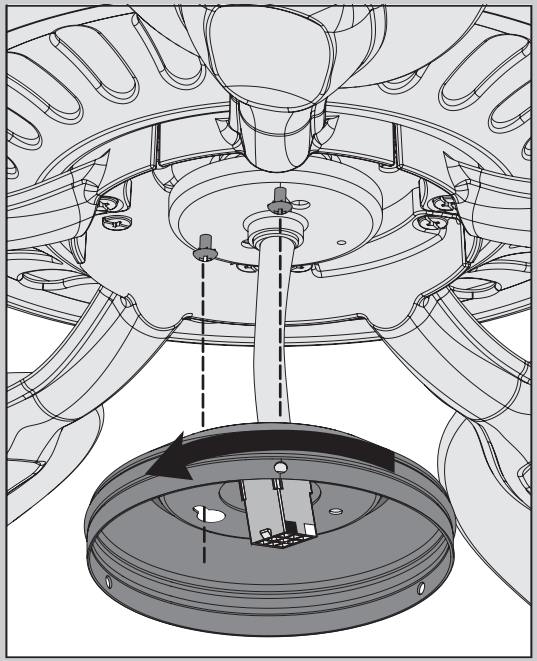

Feed the wire plug through the center hole of the upper switch housing, then wrap keyhole slots around the screws and twist counterclockwise.

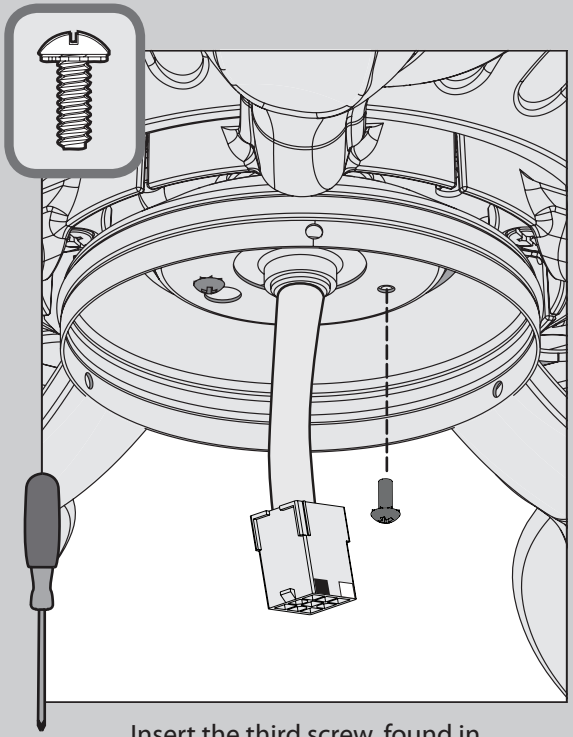

Insert the third screw, found in the ≡ hardware bag, into place and then tighten all three screws.

Make sure the upper switch housing is securely attached to the mounting plate. Failure to properly secure all 3 assembly screws could result in the switch housing fixture falling.

M0002-01 • 06/25/15 • © 2012–2015 Hunter Fan Company

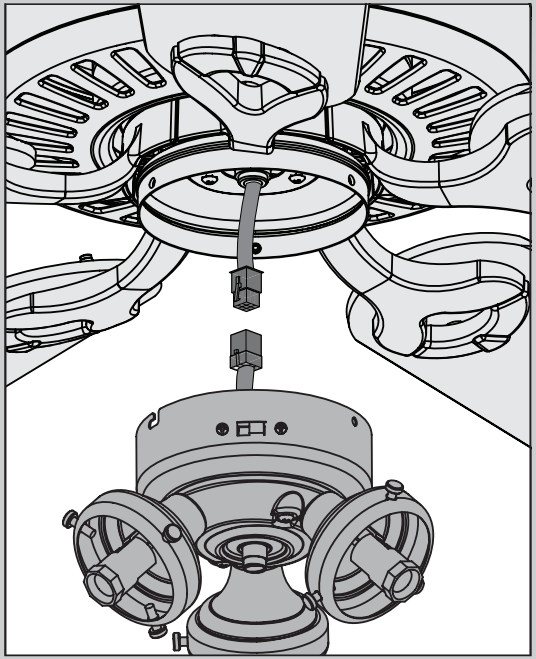

Connect the plugs from the upper and lower switch housings. Make sure to line up the colored markings on the connectors.

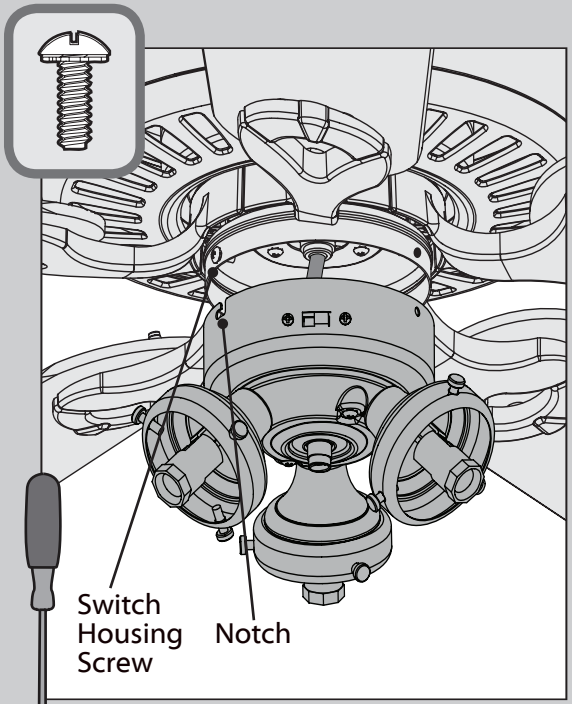

Partially install two of the switch housing screws found in the ≡ hardware bag. Align the notches in the sides of the lower switch housing with the screws on the upper switch housing. Twist the lower switch housing clockwise to lock into place.

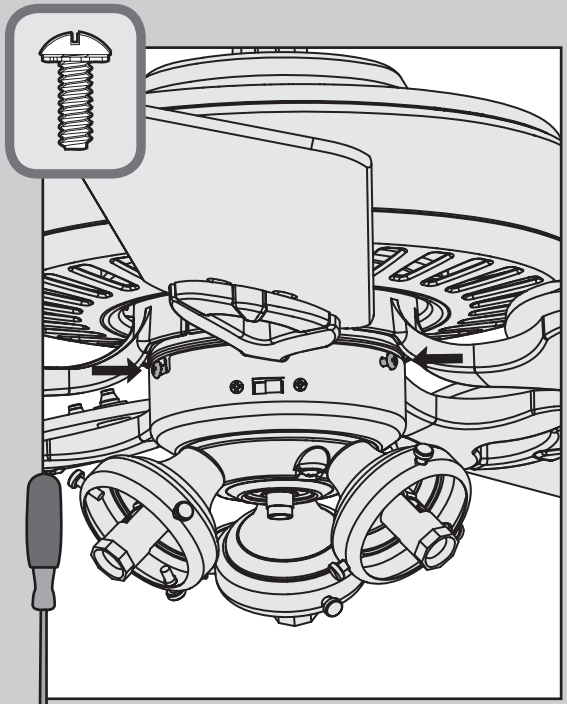

Install the third switch housing screw. Tighten all three screws securely.

Want to install your fan without a light kit?
Go to www.HunterFan.com/FAQs and click "How do I install my fan without the light kit?"

Make sure the lower switch housing is securely attached to the upper switch housing. Failure to properly secure all three assembly screws could result in the light fixture falling.

M0002-01 • 06/25/15 • © 2012–2015 Hunter Fan Company

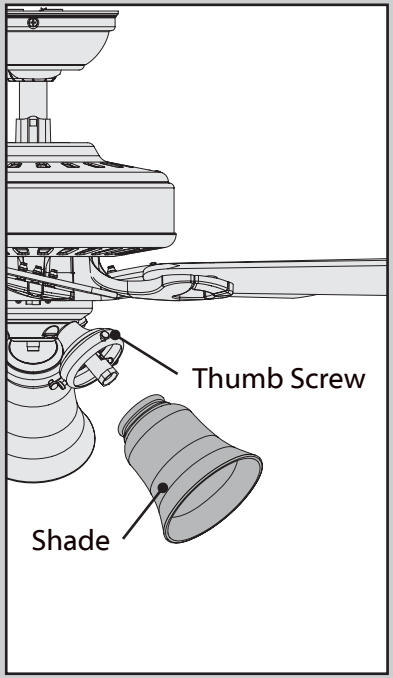

To install the shade, first loosen the thumb screws. Raise the shade to the light fixture. Tighten all thumbscrews securely.

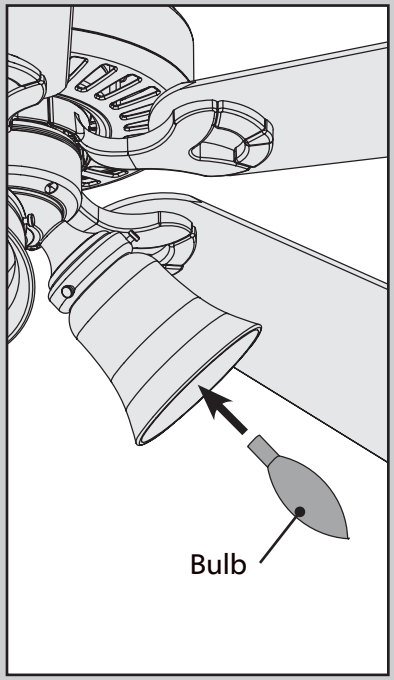

Install a bulb into each of the sockets. When necessary, replace with bulbs of the same type and wattage.

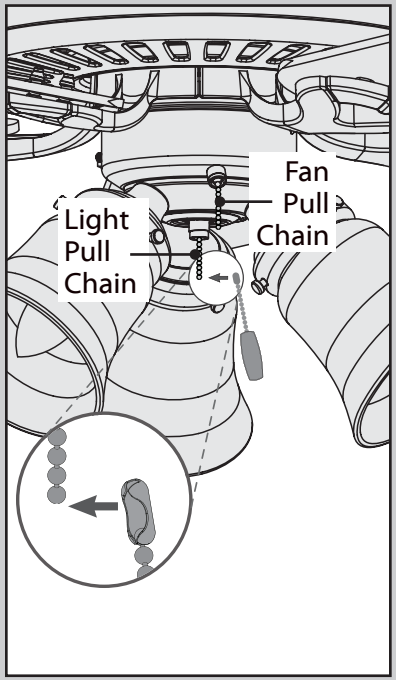

Connect the appropriate pull chain pendant to each of the short chains coming from the switch housing.

See next page for fan operation instructions.

Note: In compliance with US federal energy regulations, this ceiling fan contains a device that restricts its light output. Exceeding the wattage limit marked on the MAX wattage sticker affixed to the light socket(s) may result in fire hazard or improper operation.

Note: Glass shade style and number of lights may vary.

M0002-01 • 06/25/15 • © 2012–2015 Hunter Fan Company

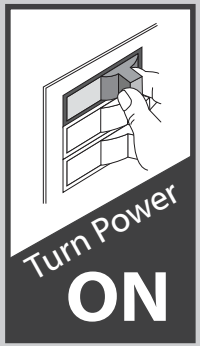

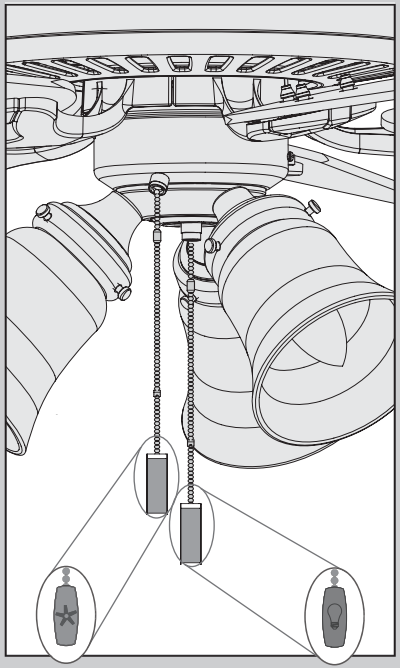

The fan pull chain controls the speed: from high to off.

The light pull chain controls the light fixture: on and off.

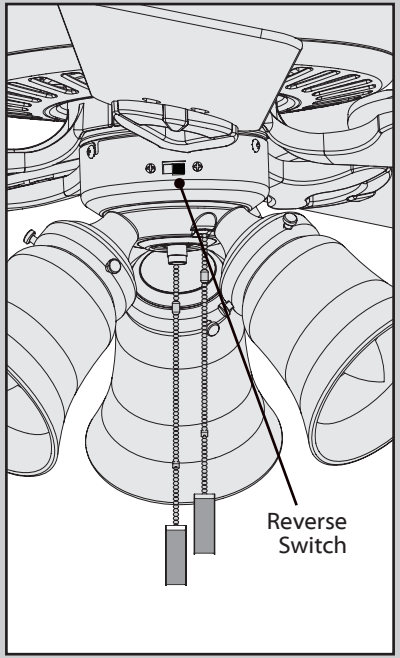

To switch the direction of air flow, move the reverse switch to the opposite position.

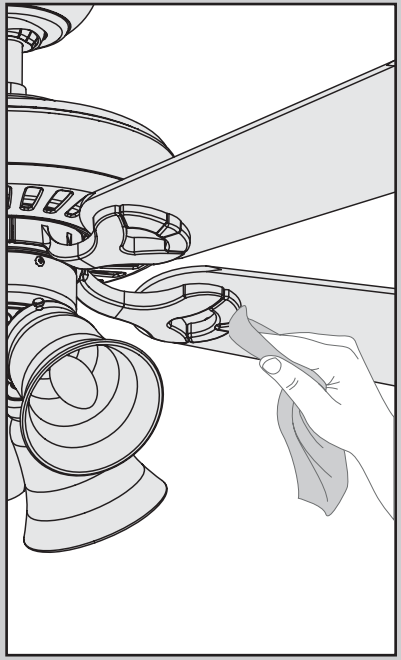

For cleaning the fan, use soft brushes or cloths to prevent scratching. Cleaning products may damage the finishes.

For questions regarding removing a light kit, call customer service 1-888-830-1326.

M0002-01 • 06/25/15 • © 2012–2015 Hunter Fan Company

Fan doesn't work

- Make sure power switch is on.
- Pull the pull chain to make sure it is on.
- Push the motor reversing switch firmly left or right to ensure that it is engaged.
- Check the circuit breaker to ensure the power is turned on.
- Make sure the blades spin freely.
- Turn off power from the circuit breaker, then loosen the canopy and check all the connections according to the wiring diagram on page 10.
- Check the plug connection in the switch housing.

Excessive wobbling

- Tighten all of the blade and blade iron screws until they are snug.
- Turn the power off, support the fan carefully, and check that the hanger ball is properly seated.
- Use the provided balancing kit and instructions to balance the fan.

Noisy Operation

- Tighten the blade and blade iron screws until they are snug.
- Check to see if any of the blades are cracked. If so, replace all of the blades.

Lights dim when turned on or do not turn on at all.

- Make sure the wattage of the light bulbs installed matches the specifications on the light sockets.

M0002-01 • 06/25/15 • © 2012–2015 Hunter Fan Company