canplas PLUMBING

SUBMITTAL SHEET

Part Description:

1-1/2" PVC WHITE DWV Cleanout Plug Male National Pipe Thread (MPT)

Part Number:

193051S

Approvals and Listings maintained by:
Canplas Industries Ltd
Canada: 1-800-461-5300 USA: 1-888-461-5307

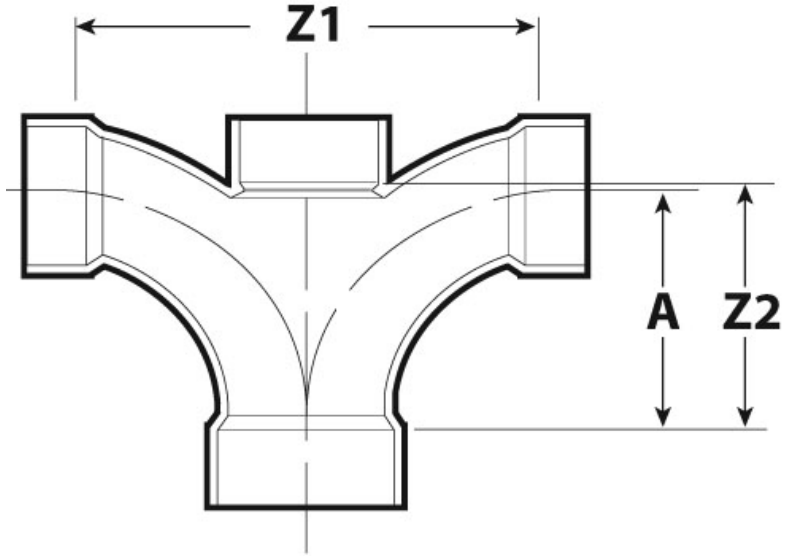

Part #	Part UPC	Size (inches)	Ctn Qty	Ctn Bar Code	Ctn Wt (Kgs)	Ctn Wt (lbs)	Skid Cubic (m)	Skid Cubic (ft)	Ctns/Skid
193051S	662671192165	1-1/2	120	10662671192162	3.59	7.90	1.79	63.37	144

Dimensions (Inches)

A	B
1.36	0.633